Consolidated Vendor Guidelines

Last updated: August 12, 2026 8:20 AM

Proprietary and confidential. All rights reserved. ©Best Buy | Best Buy internal and vetted partner use only. Do not copy, publish, or distribute.

Universal Expectations

All vendors are **required to understand and implement** the information contained within this guide. Additional questions should be directed to your designated Project Manager. **Best Buy reserves final rights to approve or request modifications for all displays that enter its retail stores.**



Demo or Display Product

- All vendor-owned presentations require Demo, Display or Dead Mock Display product(s) to be included.
- **Demo:** An out-of-box product feature that allows for an interactive experience.
- **Display:** A non-interactive product included to showcase materiality, form factor, colorways and sizing.
- **Dead Mock Display:** A non-interactive 3D model of a salable product intended to showcase form factor, colorways and sizing.
- Printed representational stand-ins of products are not allowed outside of rare, time-bound exceptions.



Product As Hero

- Demo, Display or Salable product should be the clear focal point of all presentations.
- Educational collateral, graphics or digital content should always be positioned as secondary information.
- See Store Experience Visual Merchandising Playbook for examples.



ESL Pricing Inclusion

- A proximally placed ESL is required for each Display or Salable product.
- Three ESL options size options exist: Peg Labels, Fact Tags and Mass Displays. See ESL Store Pricing chapter for an overview or the Store Experience Visual Merchandising Playbook for full details.
- Plan for appropriate space for ESL inclusion when designing your presentations.
- Ensure consistent and accurate ESL placement by following the ESL attachment recommendations within individual guidelines.



Lighting

- Lighting standards create consistent, focused, customer-centric experiences in stores. They ensure product remains focal, reduce unwanted attention on empty or unkempt fixtures, and prevent over-stimulation.
- **Inline:** Lit logos on headers and light emitted by display products and monitors are permitted. Additional lighting opportunities may exist for inline presentations 4' or wider. Refer to Lowbay Gondola Total Activation Guideline for details.
- **Endcap:** Uplighting, fixture edge soft ambient lighting, lit logos on headers, and light emitted by display products and monitors are permitted. All other forms of lighting are not permitted.
- **Perimeter wall:** Lit logos on headers, lit subheads, and light emitted by display products and monitors are permitted. All other forms of lighting are not permitted.
- **Vendor Home:** Uplighting, shelf lighting, backlighting, fixture edge soft ambient lighting, lit logos on headers, and light emitted by display products and monitors are permitted. All other forms of lighting are not permitted.
- Downlighting is only permitted in instances when overheads or canopies block ceiling emitted light.

Last Updated August 12, 2026 8:20 AM | Best Buy partner and internal use only. Do not copy, publish, or distribute. The material in this document is confidential to Best Buy.

Universal Expectations

All vendors are **required to understand and implement** the information contained within this guide. Additional questions should be directed to your designated Project Manager. **Best Buy reserves final rights to approve or request modifications for all displays that enter its retail stores.**



Structural/Seismic Guidelines

- Prior to construction, all fixtures 5'9" and over must have their supporting structure analyzed and certified for seismic load per the building code.
- Load-bearing and weight-bearing fixtures under 5'9" may also need to be reviewed for proper anchoring and design.
- Vendors are responsible for analysis and certification costs. It is recommended vendors use Advanced Structural Technologies (AST) as a source for structural engineer as well as seismic design. This is Best Buy's preferred Structural Engineer partner.
- Fixture dress kits have a weight limit of 220 pounds.
- HEET Walls and standalone fixtures have additional weight limits.
- Additional questions should be directed to your designated Project Manager.

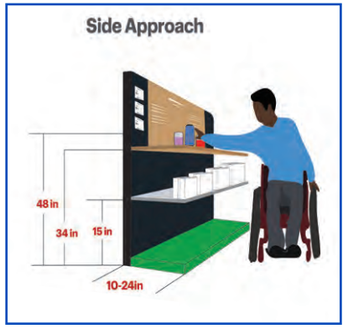

ADA Compliance

- Americans with Disabilities Act (ADA) requirements must be fully considered when planning or building any physical presentation within our stores. These laws keep our customers and employees safe and ensure accessibility.
- Special consideration should be paid to Interactive product heights and depths, protruding objects and aisle spacing impacts.
- See full ADA specifications in the Architecture & Construction section of this guide, the Store Experience Visual Merchandising Playbook or the ADA Quick Guide.

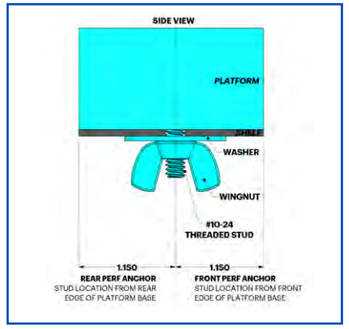

Fixture Integrity and Attachments

- No core fixture component may be removed or discarded to make room for vendor presentations, including basdecks, table tops, side panels, standards, etc.
  - Shelves, peg hooks, merch bars and other movable merchandising components may be detached and stored in the warehouse.
- All vendor presentations and product displays that activate on Best Buy owned fixtures (Lowbay Gondolas, Half Racking, Tables, etc.) require physical security mounts of tethers.
  - This prevents the presentation or product from moving or falling, which risks customer or employee injury.
  - Preferred method: Attach to shelf's perforated pattern, slots or channels using threaded studs with washers and wingnuts.
  - Adhesive attachments are not allowed.

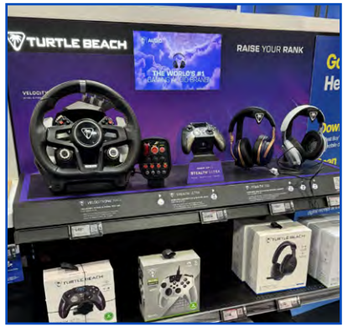

Customer Centricity

- Design all displays to be accessible and customer-centric, going beyond minimum ADA requirements.
- Place interactive elements, buttons, and touchscreens at the front of displays and fixtures to ensure easy customer access.
- Position products at the front of the display so customers can easily reach them.
- Angle educational and interactive touchpoints toward the customer to improve visibility, engagement, and ease of use.

Last Updated August 12, 2026 8:20 AM | Best Buy partner and internal use only. Do not copy, publish, or distribute. The material in this document is confidential to Best Buy.

Universal Expectations

All vendors are **required to understand and implement** the information contained within this guide. Additional questions should be directed to your designated Project Manager. **Best Buy reserves final rights to approve or request modifications for all displays that enter its retail stores.**

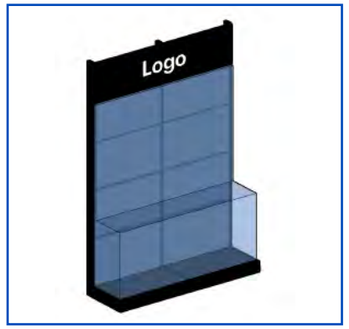

Vendor Headers

- **Fixture height of 60” or lower:** Vendor must brand their space with a logo that appears in the top 6” of their display. Unless specified within specific fixture or departmental guidelines, logo may be illuminated and appear in any color.
- **Fixture height of above 60”:** Vendor must brand their space with a logo that appears at the top of their display. Logo must be centered over fixture(s) and match the size and material specs called out within specific fixture or departmental guidelines. Regardless of department, logo should appear exclusively in white on a black background.

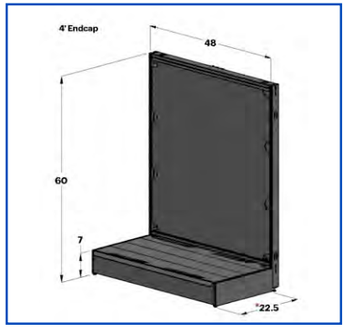

Permitted Heights

- All presentation and display components must fall within the dimensions of the Best Buy fixture to which they attach.
- Standard fixture height is 60”H (including graphics and add-ons). Fixture requests taller than 60”H will be evaluated on a case-by-case basis and may be permitted with prior approval.
- The location of a presentation within the store will be considered when evaluating height. In general, presentations should build from low to high from the front edge of a department or racetrack to the back so as not to impede sightlines.

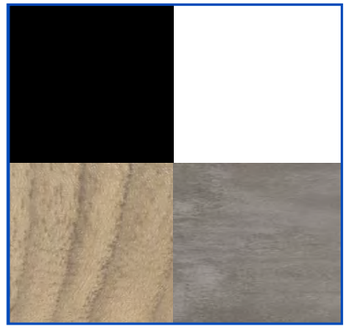

Standard Materials Finishes

- Unified finishes are provided to ensure a seamless integration of displays within Best Buy’s retail environments.
- Compliance to each material finish is required where specified. See individual guidelines for details.
- **If no specific finishes are detailed** within individual guidelines, **leverage standard finishes**:
  - Standard wood finish: Omnova Saarinen Driftwood 3D Laminate
  - Standard white finish: Powercoat: Tiger Drylac – White Fine Texture 049-13150
  - Standard black finish: Powdercoat PC938 Matte Black – IFS Coatings, INC PLSM10812CN
  - Standard black header material: Alpolic PE and finish: BLX Black
  - Standard translucent letter/logo finish: White Light, White Optics 009 Matte



QR Codes

- To avoid customer confusion, a limited number of QR codes are permitted on vendor presentations.
- One QR code lives on each product’s Electronic Shelf Label (ESL). This code directs to product details, inventory and fulfillment options.
- If desired, include only one digital or printed QR code (in addition to ESL QR codes) per four linear feet of your vendor presentation.
  - ***Note:*** *Only include a QR code when you have exciting, specialized content that will educate customers and contribute to a more* successful shopping journey.
- Show printed QR codes in 100% black and white. No color is permitted
- Place your code on a white square that is 20% larger than the code if its background is not already white.
- Ensure your QR code links to BestBuy.com or a closed microsite created only for Best Buy.
- Review QR Code section of the guidelines for complete expectations.

Last Updated August 12, 2026 8:20 AM | Best Buy partner and internal use only. Do not copy, publish, or distribute. The material in this document is confidential to Best Buy.

Universal Expectations

All vendors are **required to understand and implement** the information contained within this guide. Additional questions should be directed to your designated Project Manager. **Best Buy reserves final rights to approve or request modifications for all displays that enter its retail stores.**



POP

- The product should remain the hero of the presentation, with POP used sparingly so it does not distract from or diminish the overall display
- POP should support a single, cohesive storytelling message while highlighting key benefits and features
- POP materials should be durable and high-quality to elevate the presentation and preserve product integrity, including clean removal without adhesive residue
- Follow all department-specific vendor guidelines
- Comply with Best Buy Copy & Claims Guidelines on Partner Portal



Copy and Claims

- Copy used to promote your products should be meaningful and relevant.
- To put your best foot forward and optimize your presentation, keep copy brief, avoid technical jargon and feature the benefits that matter most to customers.
- Review Copy and Claims section of the guidelines for examples of permitted copy usage.
- Keep all copy a minimum of 36” above the floor. If the height of your presentation allows, display taglines and logos above 60”H.
- **Body copy minimum:** 9.5 pt
- **Legal copy minimum:** 7.5 pt

Last Updated August 12, 2026 8:20 AM | Best Buy partner and internal use only. Do not copy, publish, or distribute. The material in this document is confidential to Best Buy.

Universal Expectations

All vendors are **required to understand and implement** the information contained within this guide. Additional questions should be directed to your designated Project Manager. **Best Buy reserves final rights to approve or request modifications for all displays that enter its retail stores.**

Vendor-Provided Parts Labeling Guidelines

Labeling fixtures and fixture accessories helps aid in the identification, maintenance and reorder-ability of vendor presentations. At least one printed label must be adhered to each presentation featuring that kit's master part number. In some instances if parts are physically separated, or span a large area, individual parts should be labeled. To ensure consistency across all presentations, part numbers may not be printed directly onto parts.

Vendor Expectations

- **Design:** White label with black type
- **Substrate:** Durable; this is a permanent identification tool
- **Contents:** Master Part Number (VPP Part Number)
- **Placement:** Adhere the label to the exterior of the presentation or part, preferably behind or beneath. It must be discreetly placed where it can be located by Blue Shirts (without extensive disassembly) but not visible to customers.
  - **Small parts:** Use the largest possible label while maintaining discreet placement and number legibility



Last Updated August 12, 2026 8:20 AM | Best Buy partner and internal use only. Do not copy, publish, or distribute. The material in this document is confidential to Best Buy.

Presentation Methods

Vendor activations are categorized into one of four Presentation Methods, each offering a unique and specialized experience curated to ladder back to customer expectations and business goals. **Work with your dedicated project manager to learn which presentation is assigned to you.**



Vendor Home

Permanent, immersive and prominent vendor presentations that act as the foundational anchors within a Best Buy store.

Leveraging customized and bespoke fixturing, they fully reflect a brand's unique identity, while integrating into the larger store experience.

They offer customers the ability to experience and envision product via a robust assortment, deeper product education and dedicated/trained expert help.



Discovery Spotlight

Eye-catching, short-term displays that are regularly refreshed to help shoppers discover new and popular products, brands and solutions selected by Best Buy.

They serve as a testing ground to evaluate emerging vendors with a physical presence in stores, offering high-performers a pathway to scale their assortment.

They aim to excite customers with the opportunity to discover, experience and explore new ideas while shopping in a Best Buy store.



Vendor Takeover

Small footprint vendor-branded presentations that connect their product(s) to the greater category assortment.

They activate on Best Buy fixturing, blending their brand seamlessly for customers, while connecting to their overall brand presence throughout the store.

They support customer research needs with key product highlights and allow customers to see, touch and feel the product.



Baseline

Best Buy-led presentations that focus on maximizing salable product.

They support customers with a broad assortment of products, focused on ease-of-use wayfinding, pricing, product research and fulfilling.

Last Updated August 12, 2026 8:20 AM | Best Buy partner and internal use only. Do not copy, publish, or distribute. The material in this document is confidential to Best Buy.

Presentation Method Characteristics

Vendor Home



- **Environment:** Standalone shop- within-a-shop experience.
- **Branding & Signage:** Offers vendors the opportunity to transport customers into the world of their brand. Safety, attachment and branding expectations will still be enforced to ensure deploy-ability.
- **Fixturing:** Custom fixturing, graphics, illumination and interactive opportunities exist.

Vendor Takeover



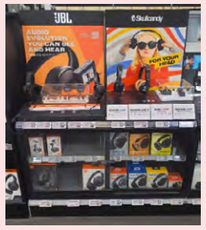



- **Environment:** The more linear footage that a Takeover occupies, the more flexibility the vendor has in how the presentation shows up.
- **Branding & Signage:** Some expectations exist around form factor and branding, but vendors are otherwise allowed to express their brand and products as desired.
- **Fixturing:** VPPs will activate on Best Buy owned fixtures.

Baseline

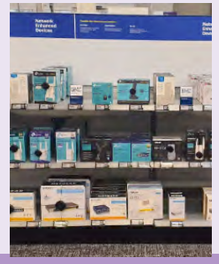

- **Environment:** Due to display size and multi-brand presence, baseline presentations need to have a high level of presentation continuity.
- **Branding & Signage:** Educational touchpoints and wayfinding elements are brand neutral and internally managed.
- **Fixturing:** Best Buy led merchandising utilizing Best Buy fixture packages to support high scalability, function and flexibility.

Discovery Spotlight



- **Environment:** High profile deployment locations allow for visibility to new brands or product ideas at Best Buy.
- **Branding & Signage:** Collateral substrate, size and content are prescribed in order to ensure cost effective and operationally seamless presentations. There are many other areas of vendor customizability within this presentation method.
- **Fixturing:** Utilizes Best Buy developed fixtures such as side stock endcaps, perimeter half racking or standard end caps.

*Images are representative of each distinct presentation type along with examples of presentation overlap scenarios.

Last Updated August 12, 2026 8:20 AM | Best Buy partner and internal use only. Do not copy, publish, or distribute. The material in this document is confidential to Best Buy.

Table of Contents

Use the hyperlinks below for easy navigation to the following guidelines. Click HOME on any page to return to the beginning of the document.

*New | ** Updated

- 8’ TV Wall
- Appliance Vendor Home**
- Car Audio
- Center of Store Brand Zone
- Computer Monitor Table*
- Convergence Zone
- Copy & Claims
- Display-Centric Basecase Graphic Insert
- Drone Case
- ESL Store Pricing**
- Fit Cubby
- Floor Care & Robotic Vacuums
- Focal Frame
- Headphones**
- Highly Visible Fixture Expectations**
- Home Theater H-Wall*
- Home Theater Vendor Home**
- Inline Display Wedge**
- Inline Focal & Platform
- Kitchen Endcaps
- L-Shaped Fixture**
- Lighting**
- Lowbay Gondola**
- Lowbay Gondola Endcap
- Lowbay Gondola Total Activation**
- Lowbay Gondola VPP Activation**
- Major Appliance POP Graphics
- Mobile Accessories**
- Perimeter Computer Monitors
- Perimeter Racking
- Perimeter Wall Graphics
- Perimeter Wall Standards
- Premium Audio Wall
- Premium Home Audio Large Concept

Last Updated August 12, 2026 8:20 AM | Best Buy partner and internal use only. Do not copy, publish, or distribute. The material in this document is confidential to Best Buy.

Table of Contents

Use the hyperlinks below for easy navigation to the following guidelines. Click HOME on any page to return to the beginning of the document.

*New | ** Updated

- Prepaid Mobile
- Product Tables
- QR Codes
- Shelf Dimensions & Perf Patterns
- Sidestock Endcap
- Slotted Vertical Uprights
- Small Appliance Endcap
- Small Appliance POP Graphics
- Theater District**
- TV Dream State
- TV Winglet Endcap
- Universal Buttons
- Vendor Home**
- Vendor Permanent Signage
- Vendor Temporary Signage*
- Video Content**

Last Updated August 12, 2026 8:20 AM | Best Buy partner and internal use only. Do not copy, publish, or distribute. The material in this document is confidential to Best Buy.

8’ TV Wall

Overview of VPD Space

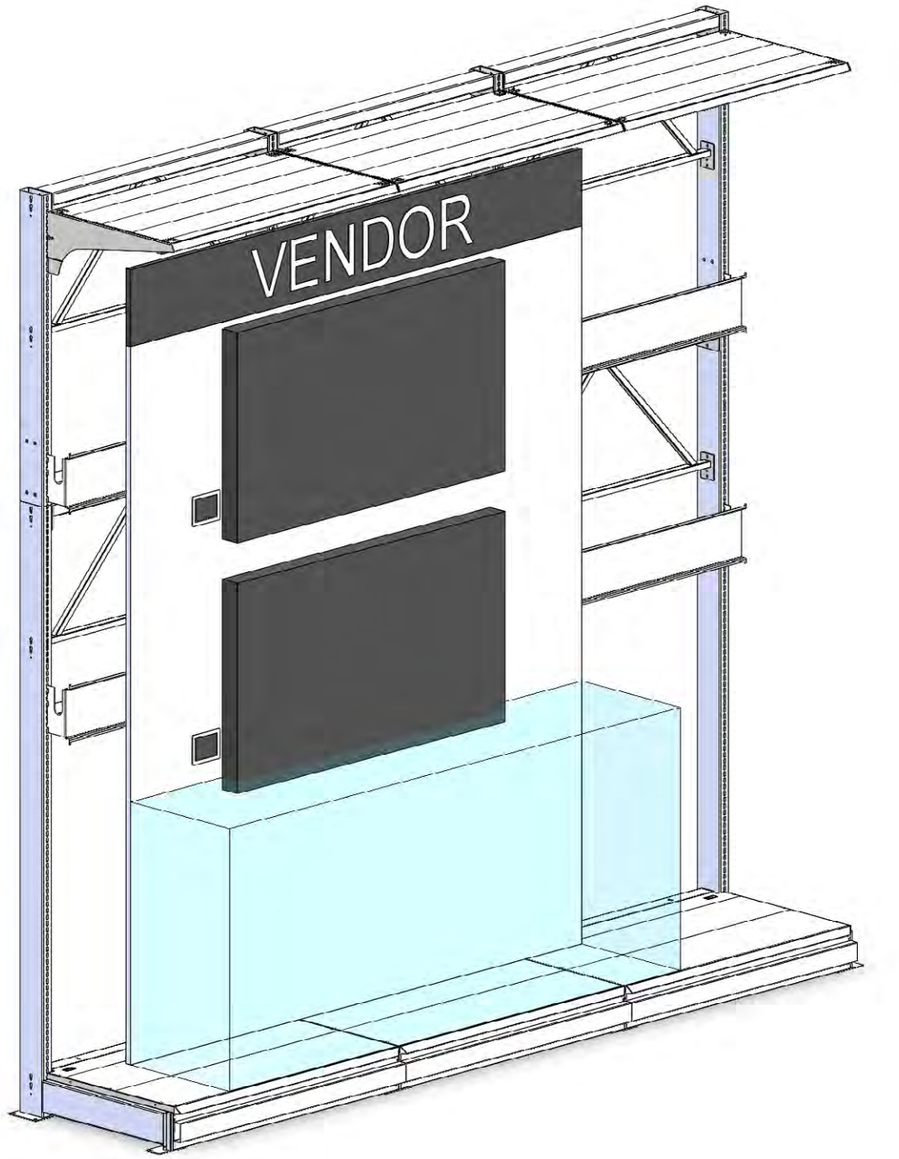

Notes:

- VPDs cannot exceed fixture dimensions, height, width or depth
- TV(s) and soundbar(s) should be displayed in this area - mounts are provided by vendor
- All merchandising/display fixtures and placement selected by vendor must meet ADA requirements
- All electronics must be reviewed by the C7 lab
- Any buttons or touch interactives must follow ADA guidelines
- Headers are allowed in this area, but must follow Best Buy fixture requirements
- No vertical signage allowed
- No additional lighting in the space (i.e. back lit TVs)
- Any additional fixture pieces will have to set on the base deck
- No basedeck covers are allowed
- All product displays must have pricing, reference the ESL guideline document

Last Updated August 12, 2026 8:20 AM | Best Buy partner and internal use only. Do not copy, publish, or distribute. The material in this document is confidential to Best Buy.

Technical Specs

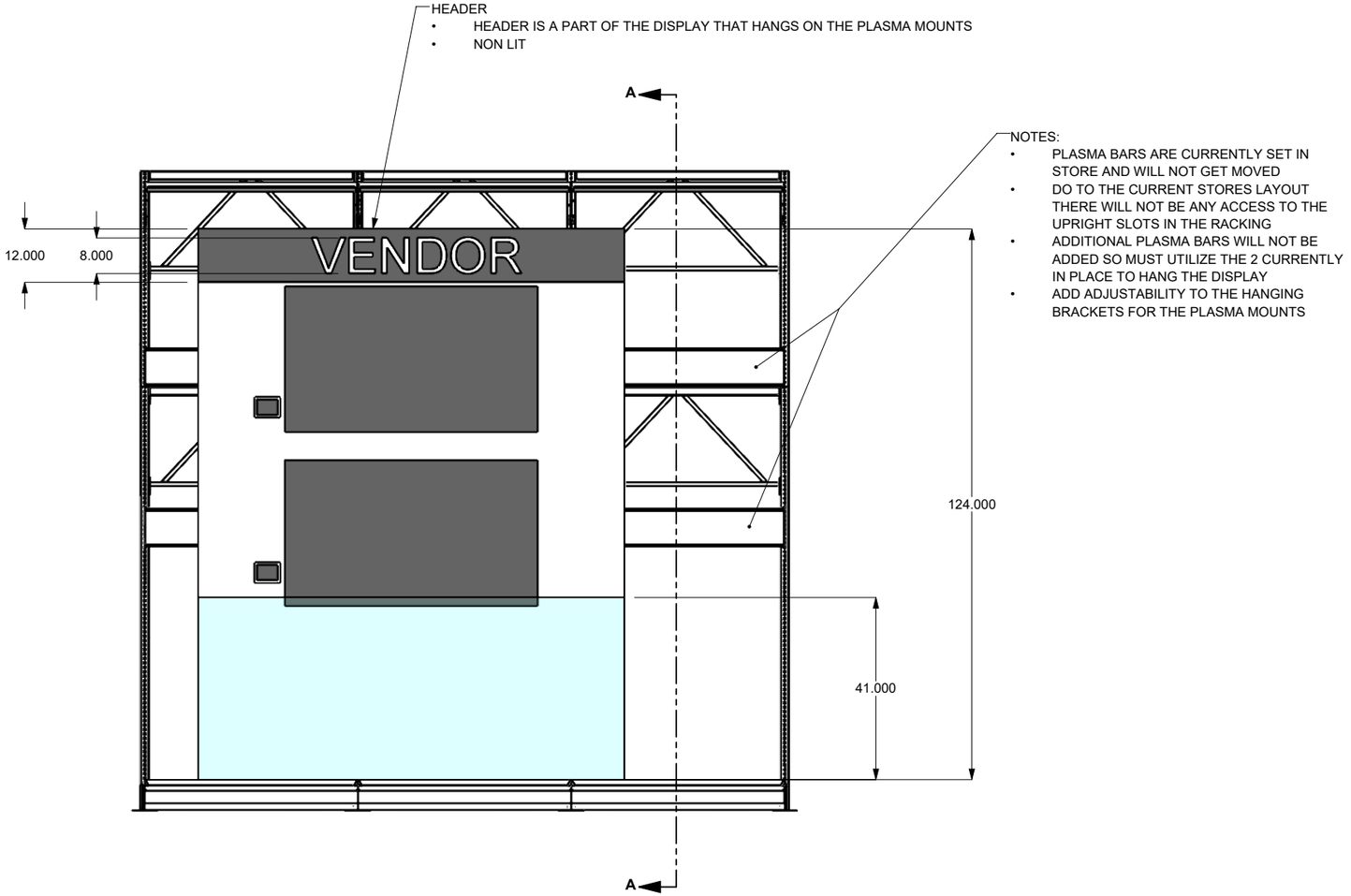

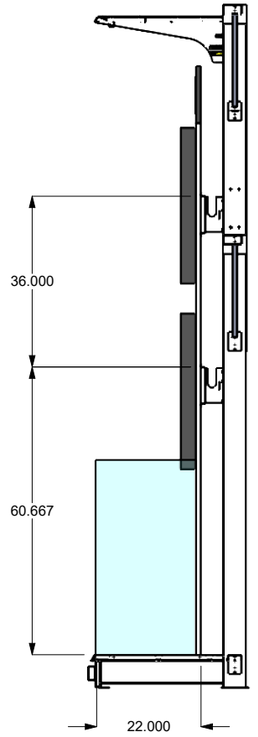

SECTION A-A
SCALE 1 : 24

Notes:

- EPDM# 0005274 (Starter) 0005275 (Addon)
- BBY can provide fixture drawings to ensure VPD fit
- VPDs will have 8ft linear space of this fixture to utilize
- Vendor provided backer panels should be neutral color and texture, need to be approved by Best Buy
- Any additional fixture pieces will have to set on the base deck
- Header plate finish: Alpolic PE BLX Black
- Letters should be a 7508 white acrylic P95 (non-lit)

Last Updated August 12, 2026 8:20 AM | Best Buy partner and internal use only. Do not copy, publish, or distribute. The material in this document is confidential to Best Buy.

Overview of VPD Space

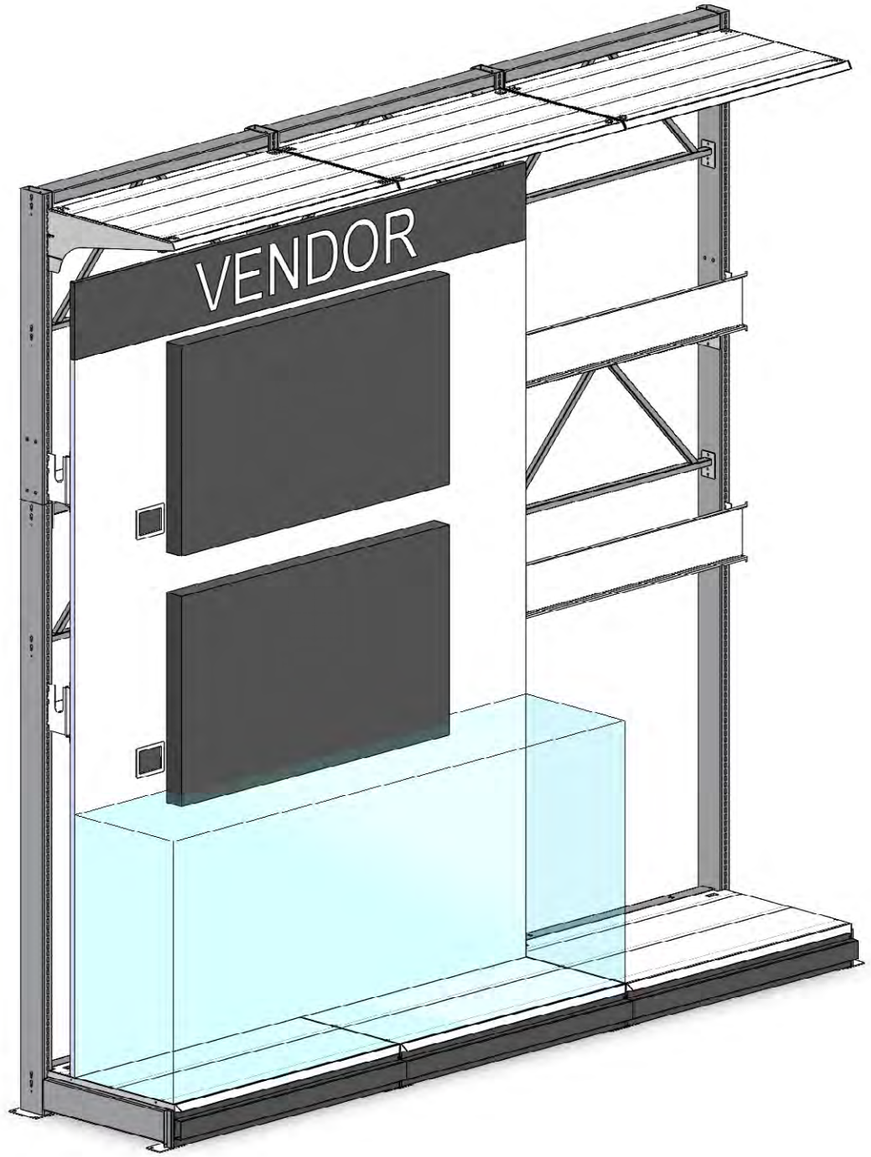

Notes:

- VPDs cannot exceed fixture dimensions, height, width or depth
- TV(s) and soundbar(s) should be displayed in this area - mounts are provided by vendor
- All merchandising/display fixtures and placement selected by vendor must meet ADA requirements
- All electronics must be reviewed by the C7 lab
- Any buttons or touch interactives must follow ADA guidelines
- Headers are allowed in this area, but must follow Best Buy fixture requirements
- No vertical signage allowed
- No additional lighting in the space (i.e. back lit TVs)
- Any additional fixture pieces will have to set on the base deck
- No basedeck covers are allowed
- All product displays must have pricing, reference the ESL guideline document

Last Updated August 12, 2026 8:20 AM | Best Buy partner and internal use only. Do not copy, publish, or distribute. The material in this document is confidential to Best Buy.

Technical Specs

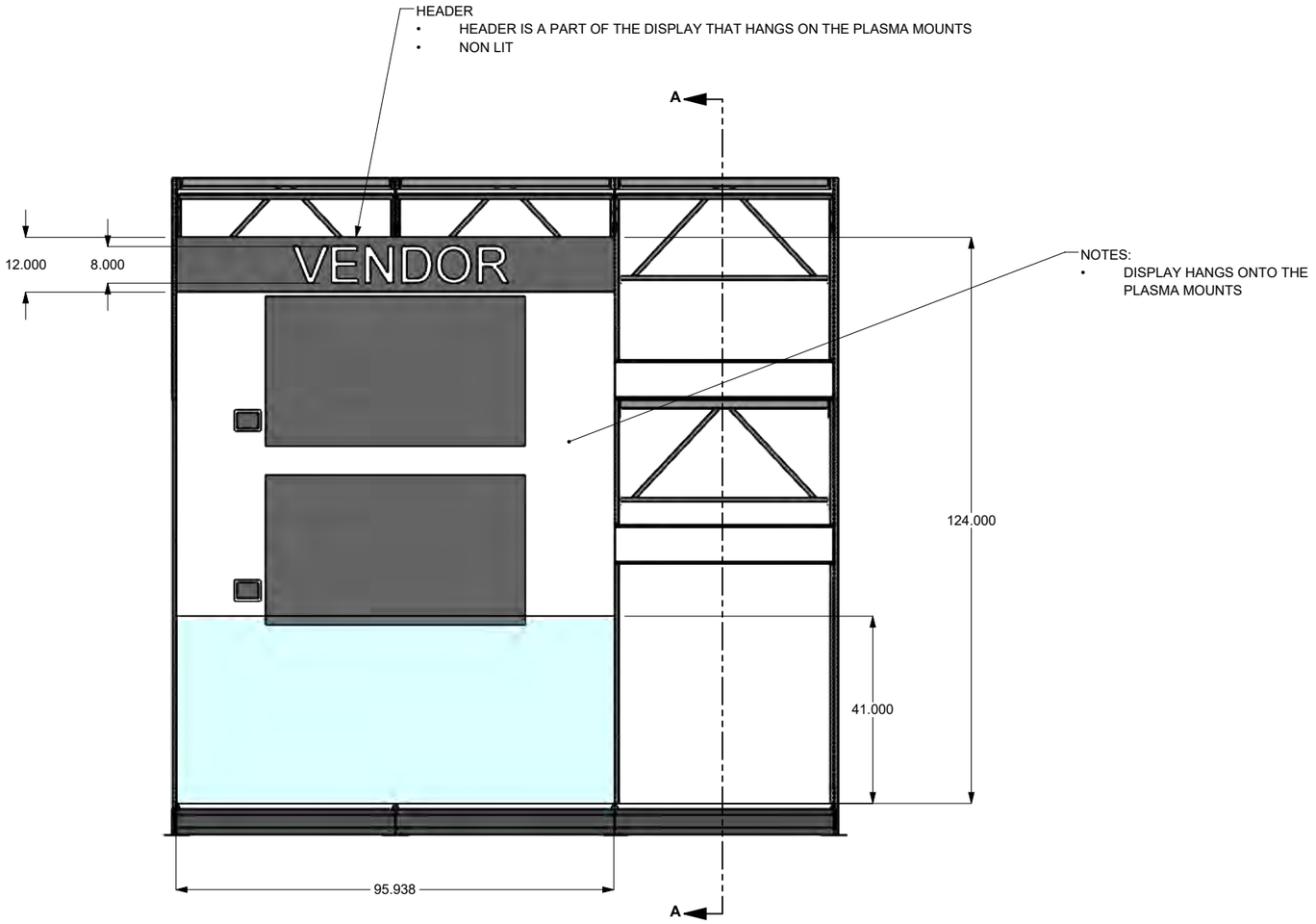

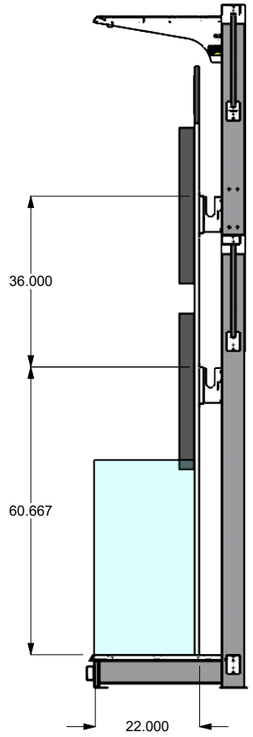

SECTION A-A
SCALE 1 : 24

Notes:

- EPDM# 0005274 (Starter) 0005275 (Addon)
- BBY can provide fixture drawings to ensure VPD fit
- VPDs will have 8ft linear space of this fixture to utilize
- Vendor provided backer panels should be neutral color and texture, need to be approved by Best Buy
- Any additional fixture pieces will have to set on the base deck
- Header plate finish: Alpolic PE BLX Black
- Letters should be a 7508 white acrylic P95 (non-lit)

Last Updated August 12, 2026 8:20 AM | Best Buy partner and internal use only. Do not copy, publish, or distribute. The material in this document is confidential to Best Buy.

Overview of VPD Space

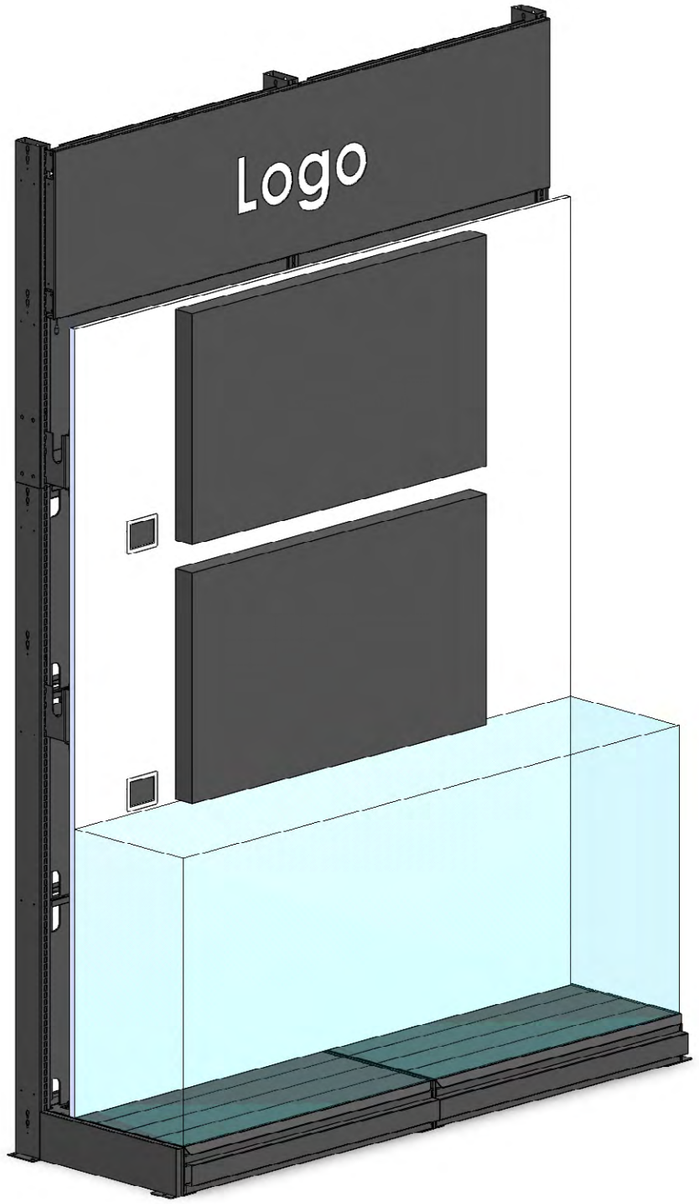

Notes:

- VPDs cannot exceed fixture dimensions, height, width or depth
- TV(s) and soundbar(s) should be displayed in this area - mounts are provided by vendor
- All merchandising/display fixtures and placement selected by vendor must meet ADA requirements
- All electronics must be reviewed by the C7 lab
- Any buttons or touch interactives must follow ADA guidelines
- Headers are allowed in this area, but must follow Best Buy fixture requirements
- No vertical signage allowed
- No additional lighting in the space (i.e. back lit TVs)
- Any additional fixture pieces will have to set on the base deck
- No basedeck covers are allowed
- All product displays must have pricing, reference the ESL guideline document

Last Updated August 12, 2026 8:20 AM | Best Buy partner and internal use only. Do not copy, publish, or distribute. The material in this document is confidential to Best Buy.

Technical Specs

VENDOR TV WALL - 35K

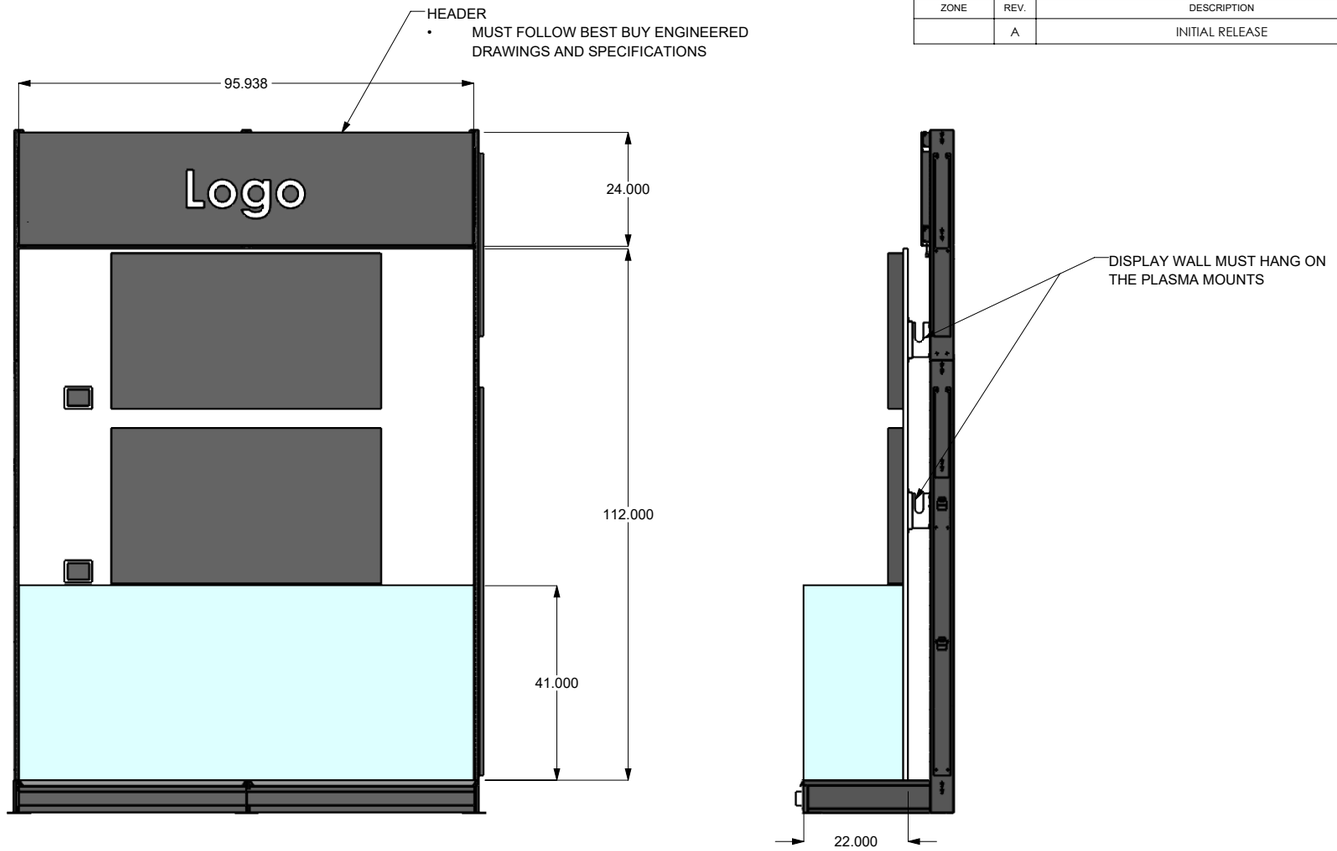

REVISIONS				
ZONE	REV.	DESCRIPTION	DATE	APPROVED
	A	INITIAL RELEASE	00-00-00	

Notes:

- EPDM# R0015-B
- BBY can provide fixture drawings to ensure VPD fit
- VPDs will have 8ft linear space of this fixture to utilize
- Vendor provided backer panels should be neutral color and texture, need to be approved by Best Buy
- Any additional fixture pieces will have to set on the base deck

Last Updated August 12, 2026 8:20 AM | Best Buy partner and internal use only. Do not copy, publish, or distribute. The material in this document is confidential to Best Buy.

VPD Fixture Details



Attachment Area

- Header hangs on two merchandising bars that will clip into the fixture uprights

Notes:

- 24” vendor header is the standard application
- 12” vendor header can be leveraged on Wing Walls to accommodate two large TVs along with header within the display
- Physical headers are allowed but must match existing Best Buy headers
- Reference EPDM# 1021616 for overall construction and finish specifications
- Header plate finish: Alpolic PE BLX Black
- Letters should be a white light, white optics 009 matte finish
- Headers hang on merchandising bars that are attached to uprights

Last Updated August 12, 2026 8:20 AM | Best Buy partner and internal use only. Do not copy, publish, or distribute. The material in this document is confidential to Best Buy.

Overview of VPD Space

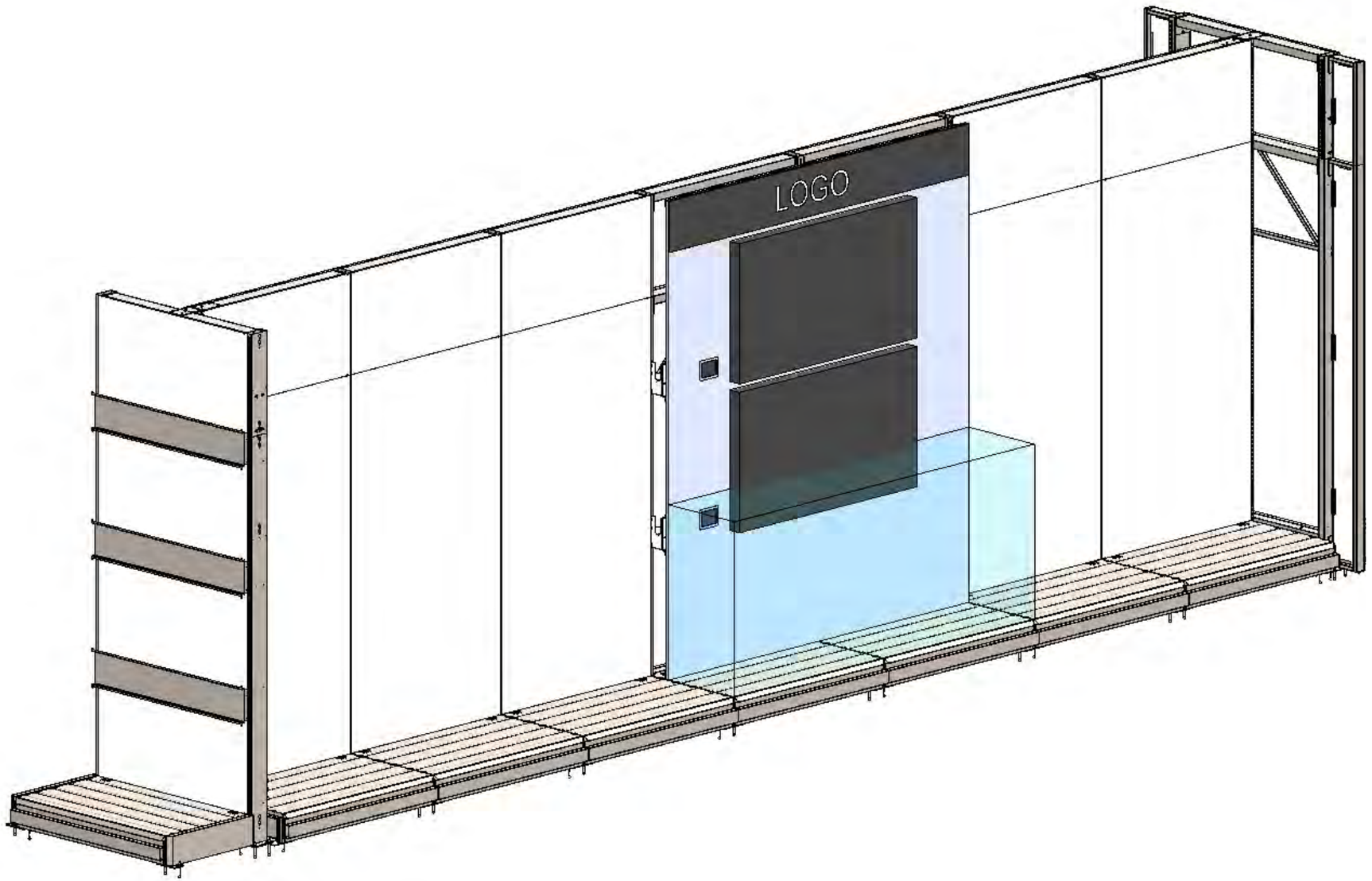

Notes:

- VPDs cannot exceed fixture dimensions, height, width or depth
- TV(s) and soundbar(s) should be displayed in this area - mounts are provided by vendor
- All merchandising/display fixtures and placement selected by vendor must meet ADA requirements
- All electronics must be reviewed by the C7 lab
- Any buttons or touch interactives must follow ADA guidelines
- Headers are allowed in this area, but must follow Best Buy fixture requirements
- No vertical signage allowed
- No additional lighting in the space (i.e. back lit TVs)
- Any additional fixture pieces will have to set on the base deck
- No basedeck covers are allowed
- All product displays must have pricing, reference the ESL guideline document

Last Updated August 12, 2026 8:20 AM | Best Buy partner and internal use only. Do not copy, publish, or distribute. The material in this document is confidential to Best Buy.

Technical Specs

VENDOR TV WALL - WINGWALL INLINE

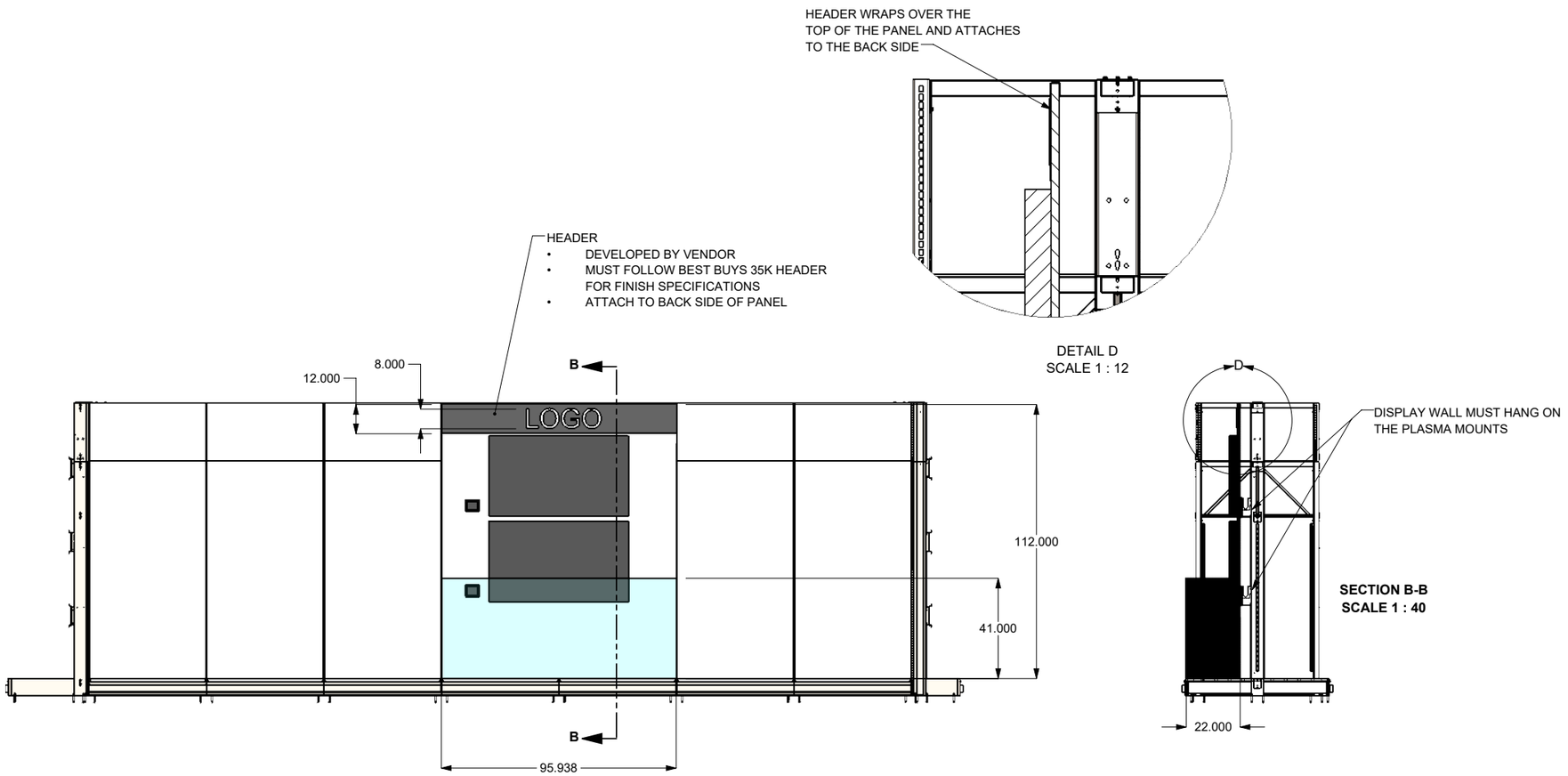

Notes:

- EPDM# 1006813
- BBY can provide fixture drawings to ensure VPD fit
- VPDs will have 8ft linear space of this fixture to utilize
- Vendor provided backer panels should be neutral color and texture, need to be approved by Best Buy
- Any additional fixture pieces will have to set on the base deck
- Header plate finish: Alpolic PE BLX Black
- Letters should be a 7508 white acrylic P95 (non-lit)

Last Updated August 12, 2026 8:20 AM | Best Buy partner and internal use only. Do not copy, publish, or distribute. The material in this document is confidential to Best Buy.

Appliance Vendor Home

Overview

The appliance vendor home offers vendors unique opportunities to create immersive, brand-focused experiences that go beyond traditional displays. It allows them to express their own voice, look and feel while bringing their product to life by simulating an in-home experience.

Each position type leverages Best Buy's existing I-Wall framework and incorporates a freestanding vendor-provided fixture space to emphasize brand expression and differentiation.

The vendor home is available in two position types:

Position Type A
- Wall space: 48 linear feet (LF)
- Freestanding vendor-provided fixture space:
  Maximum 78"W x 48"H x 148"L

Position Type B
- Wall space: 24 LF
- Freestanding vendor-provided fixture space:
  Maximum 78"W x 48"H x 148"L

Vendor Expectations
- Contain all products, signage and fixtures within the specified dimensions of the shell and vendor-provided fixtures outlined on the following pages.

**Drawings and models of all parts available upon request.*

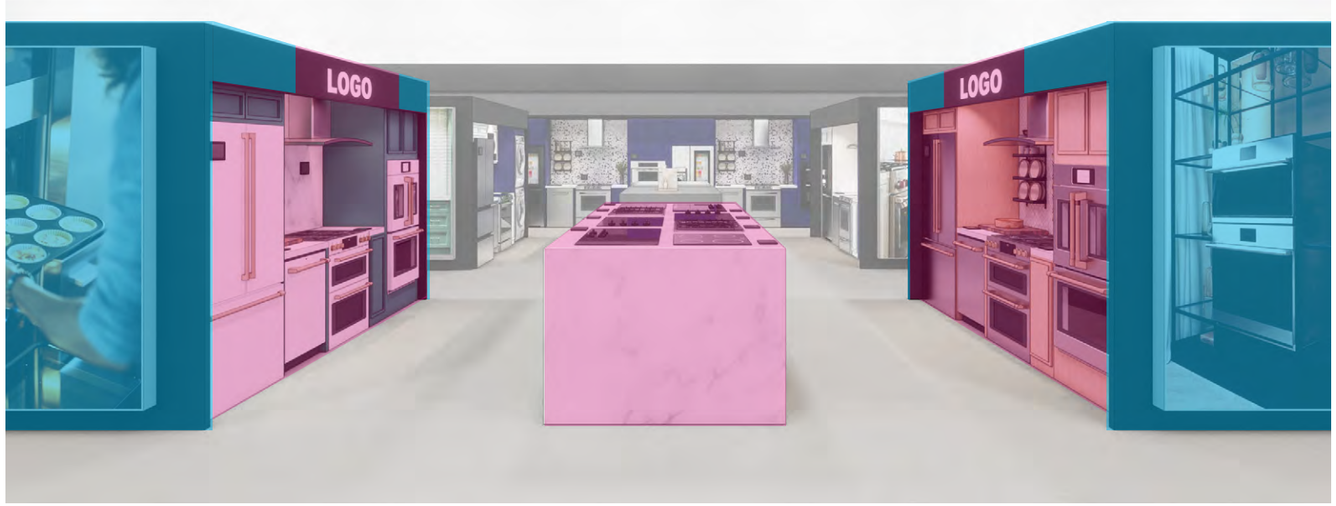

Example of Position Type B, showing vendor-managed and Best Buy-managed spaces.
Note: *Logo headers on* ***shells*** *include a logo panel that is* ***vendor-managed*** *and flanking blank panels that are* ***Best Buy-managed****. Logo headers on* ***perimeter walls*** *are* ***Best Buy-managed****.*

Vendor-managed

Best Buy-managed

Last Updated August 12, 2026 8:20 AM | Best Buy partner and internal use only. Do not copy, publish, or distribute. The material in this document is confidential to Best Buy.

Position Type A

This position gives vendors the maximum amount of square footage and available fixtures.

Position Type A includes:

- 12’W I-Wall (x2)
- 24’W Perimeter Wall *with* Shell Header **OR**
  24’W Perimeter Wall *without* Shell Header
  Note: *Ask your Best Buy contact which scenario applies to your display.*
- Freestanding vendor-provided fixture

Vendor Expectations

- Contain all products, signage and fixtures within the shell and freestanding vendor-provided fixture’s activable space.
  — **12’ shell presentation:** 143.25”W x 93.5”H x 30”D
  — **24’ shell presentation:** 289.25”W x 93.5”H x 30”D
  — **Freestanding vendor-provided fixture:**
  Maximum 78”W x 48”H x 148”L
- Note that if your presentation does not fill the entire activable depth of the I-Wall shell and ceiling space is left exposed, you must provide a ceiling treatment to ensure a finished appearance.

Note: *Aerial components are not permitted above the shell or freestanding vendor-provided fixture.*



Last Updated August 12, 2026 8:20 AM | Best Buy partner and internal use only. Do not copy, publish, or distribute. The material in this document is confidential to Best Buy.

Position Type B

This position gives vendors the second-largest amount of square footage and available fixtures, arranged with a spacious freestanding vendor-provided fixture between two walls.

Position Type B appears in the following size/fixture combinations:

- 12’W I-Wall (x2)
- Approximately 24-LF freestanding vendor-provided fixture (singular)

Vendor Expectations

- Contain all products, signage and fixtures within the shell and freestanding vendor-provided fixture’s activable space.
  - — **12’ shell presentation:** 143.25”W x 93.5”H x 30”D
  - — **24’ shell presentation:** 289.25”W x 93.5”H x 30”D
  - — **Freestanding vendor-provided fixture:** 39–78”W x 36–48”H x 148”L
- Note that if your presentation does not fill the entire activable depth of the I-Wall shell and ceiling space is left exposed, you must provide a ceiling treatment to ensure a finished appearance.

Note: *Aerial components are not permitted above the shell or freestanding vendor-provided fixture.*

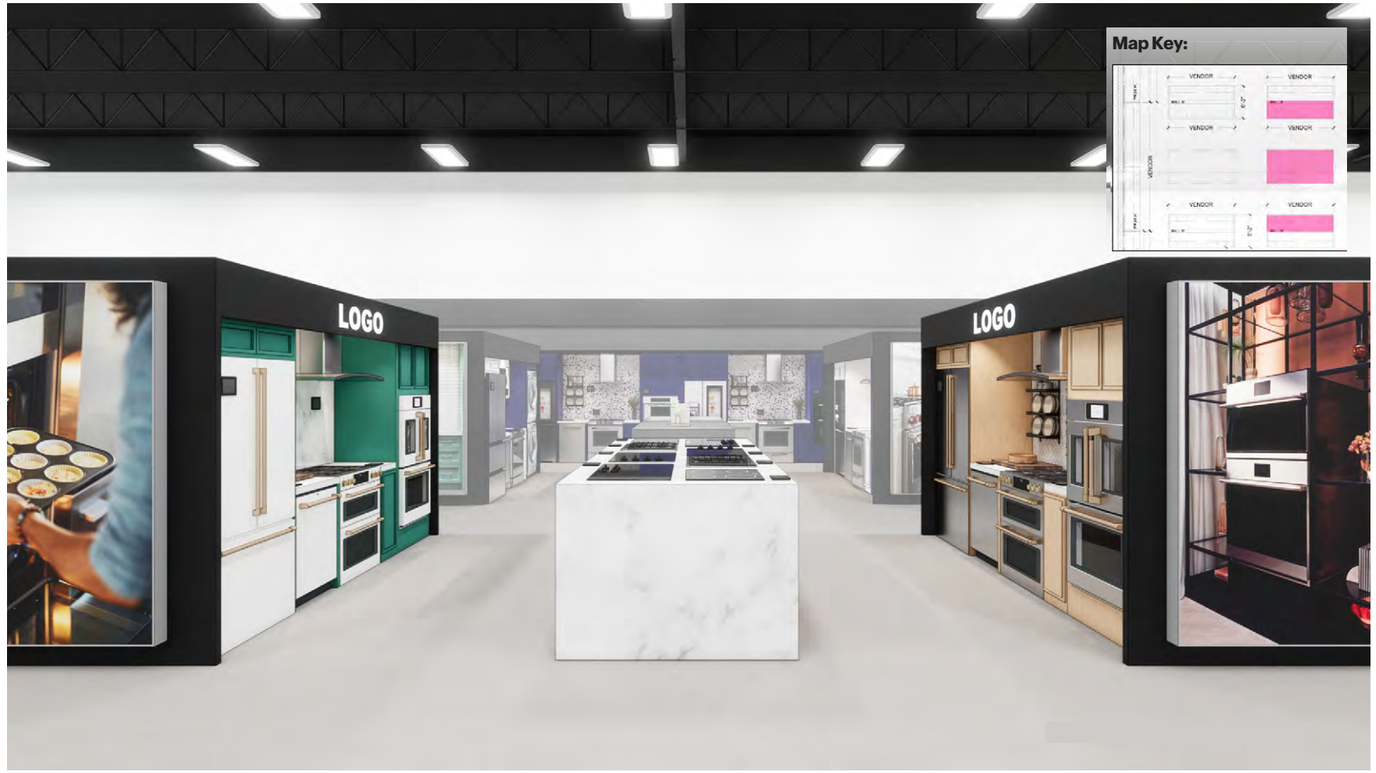

Last Updated August 12, 2026 8:20 AM | Best Buy partner and internal use only. Do not copy, publish, or distribute. The material in this document is confidential to Best Buy.

Fixture Dimensions:
BBY-Provided

The appliance shell gives vendors an exclusive space to showcase their suite of products in a way that best accentuates their brand.

The shell appears in the following size/fixture combinations:
- 12’W I-Wall
- 24’W Perimeter Wall *with* Shell Header
- 24’W Perimeter Wall *without* Shell Header

Ask your Best Buy contact which scenario applies to your display.

Vendor Expectations
- Contain all products, signage and fixtures within the shell.
  - — **12’ presentation:** 143.25”W x 93.5”H x 30”D
  - — **24’ presentation:** 289.25”W x 93.5”H x 30”D
- Note that if your presentation does not fill the entire activable depth of the I-Wall shell and ceiling space is left exposed, you must provide a ceiling treatment to ensure a finished appearance.



Example of 12’ presentation

12’ presentation space

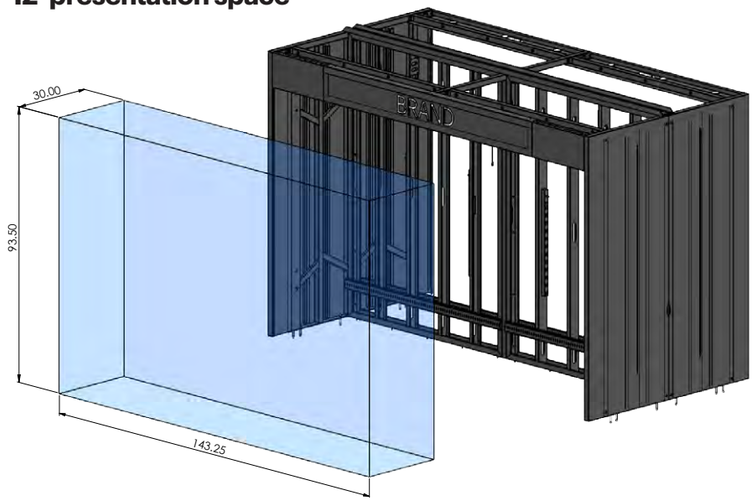

24’ presentation space

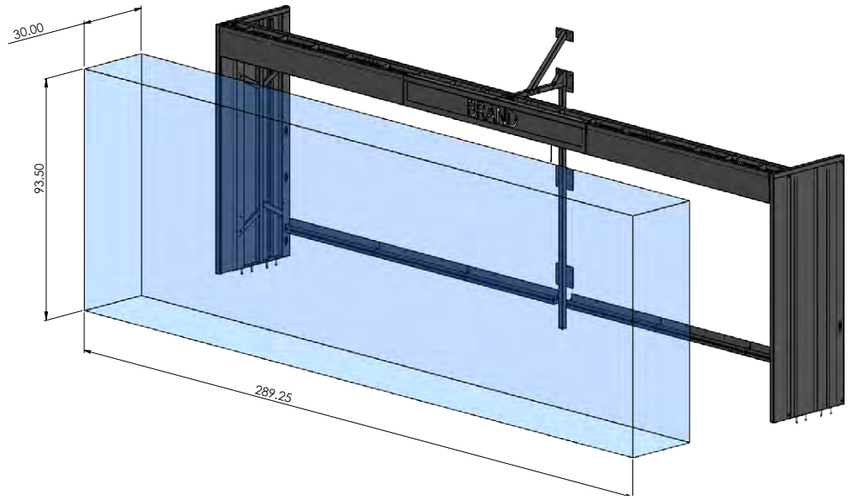

Last Updated August 12, 2026 8:20 AM | Best Buy partner and internal use only. Do not copy, publish, or distribute. The material in this document is confidential to Best Buy.

Fixture Dimensions:

12’ I-Wall

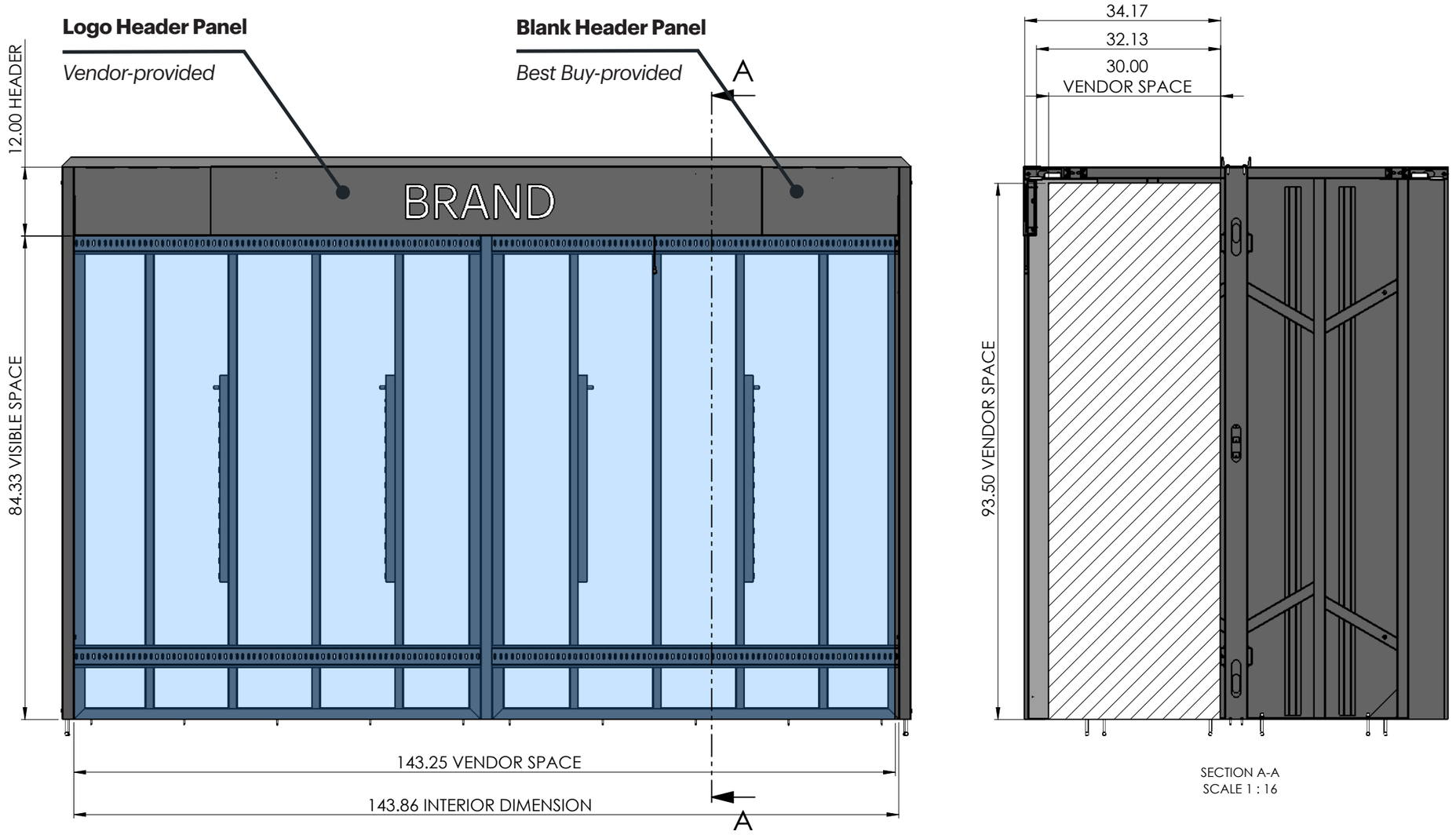

Last Updated August 12, 2026 8:20 AM | Best Buy partner and internal use only. Do not copy, publish, or distribute. The material in this document is confidential to Best Buy.

Fixture Dimensions:

24’ Perimeter Wall *with* Shell Header

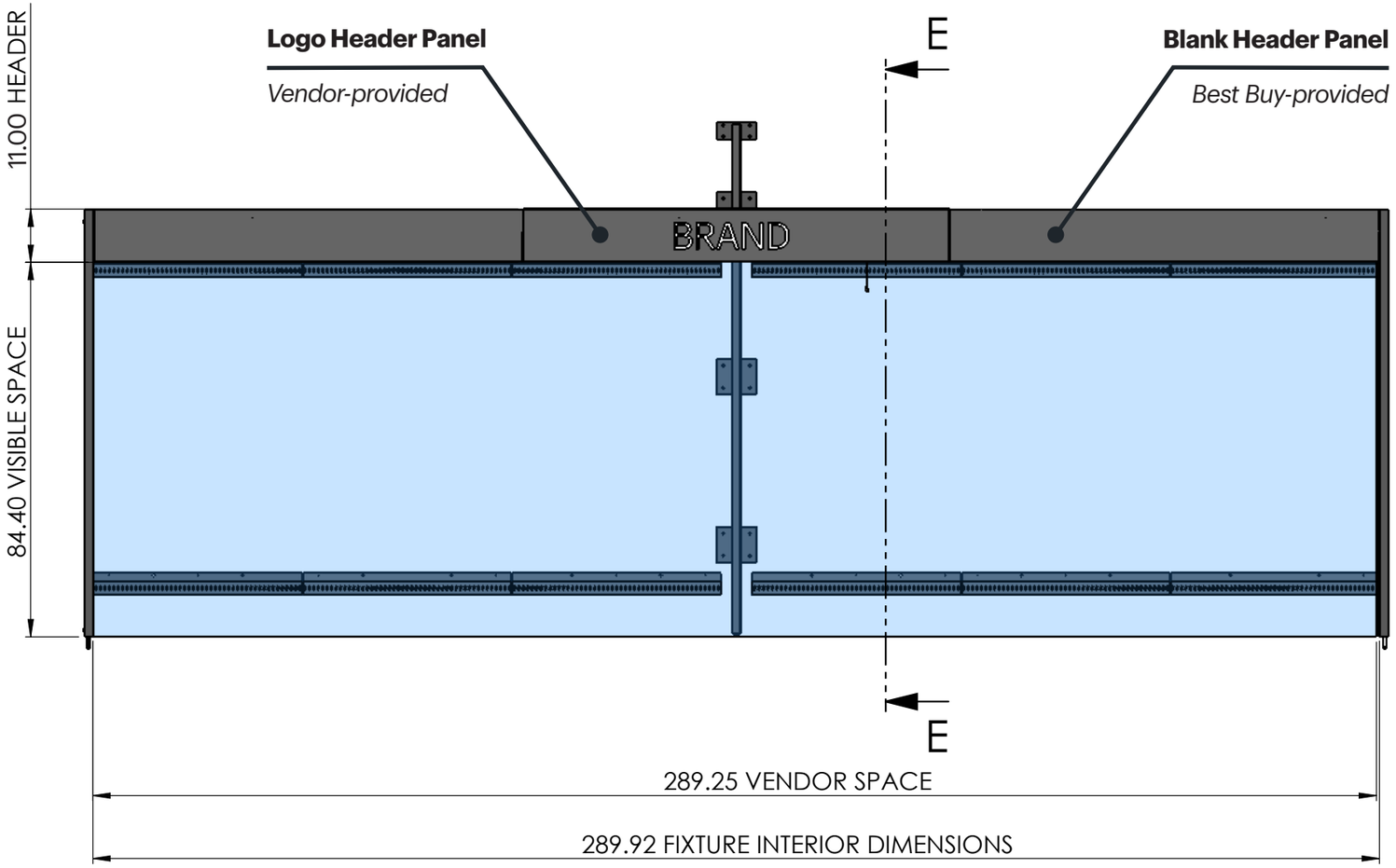

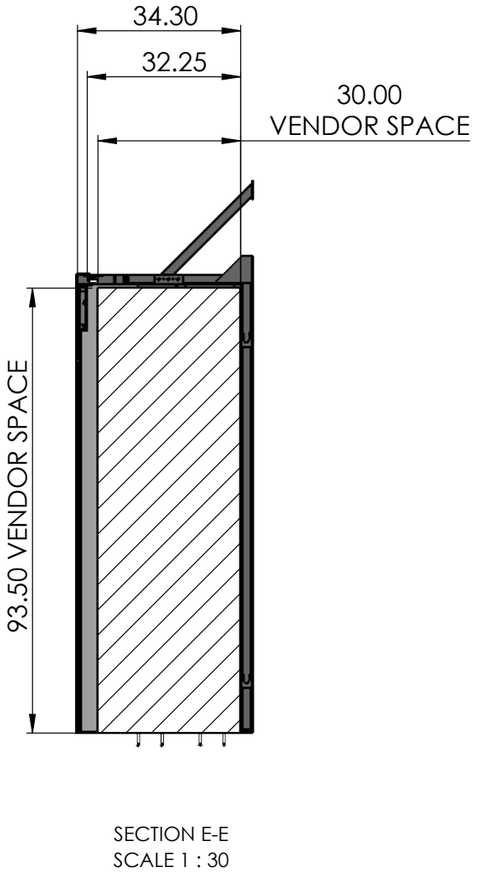

SECTION E-E
SCALE 1 : 30

Last Updated August 12, 2026 8:20 AM | Best Buy partner and internal use only. Do not copy, publish, or distribute. The material in this document is confidential to Best Buy.

Fixture Dimensions:

24’ Perimeter Wall *without* Shell Header

Due to existing logo headers on the perimeter wall above the appliance shell, this fixture does not accommodate a logo header within the shell itself.
Note: *This would occur in New Stores, Full Remodel Stores and Relocation stores.*

Vendor Expectations

- Produce a logo header panel adhering to the placement and finishes below. Ask your Best Buy contact for drawings and specifications.
  - — **Header size:** 2’H; width varies
  - — **Header finish:** Alpolic PE BLX Black
  - — **Logo size:** 11”H
  - — **Logo placement:** Centered vertically and horizontally in header
  - — **Letter finish:** White Light, White Optics 009 Matte

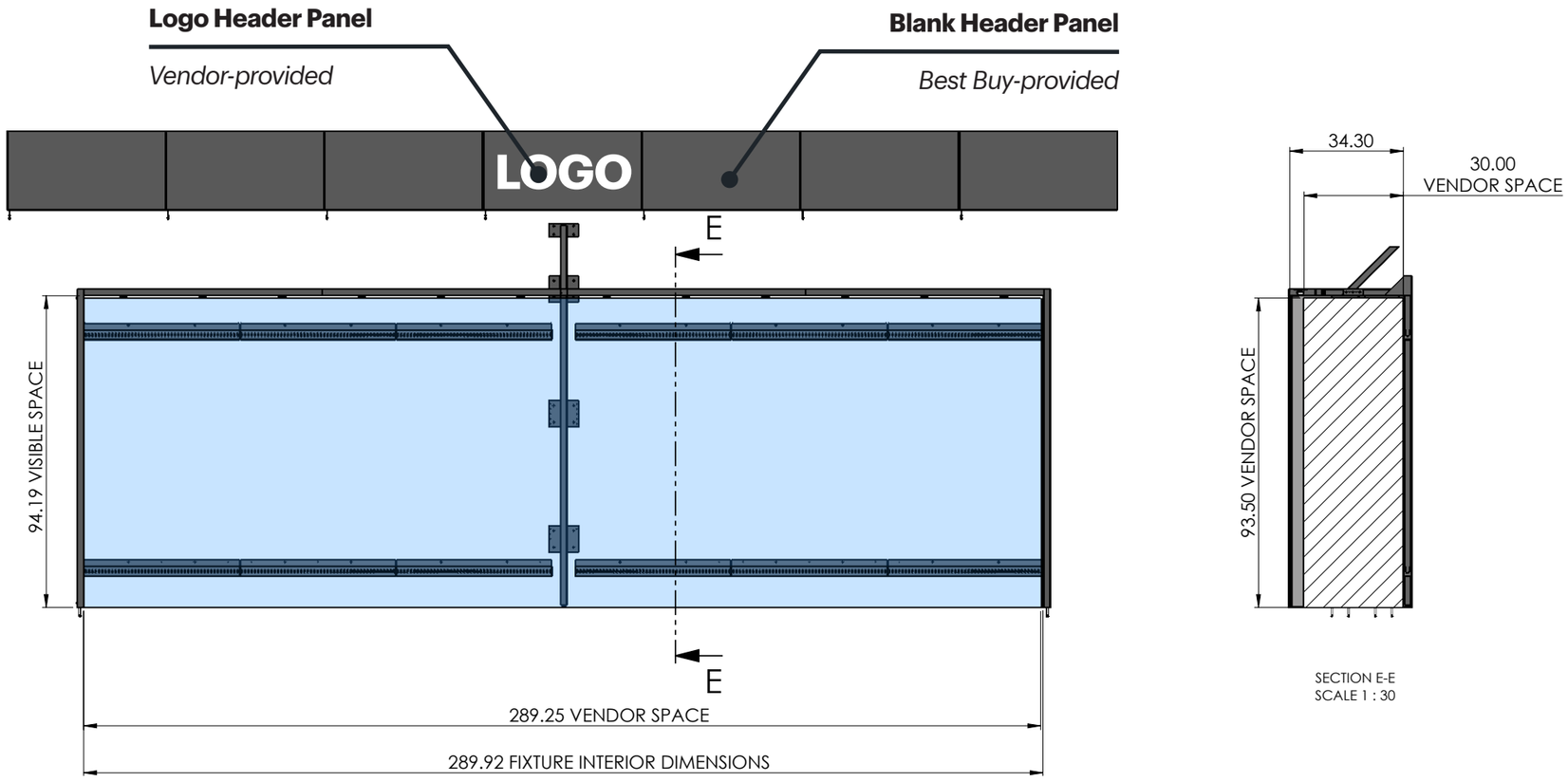

Last Updated August 12, 2026 8:20 AM | Best Buy partner and internal use only. Do not copy, publish, or distribute. The material in this document is confidential to Best Buy.

Fixture Dimensions:
Freestanding Vendor-Provided Fixture

Each appliance vendor home has allocated space to accommodate a fully vendor-provided freestanding fixture.

The activable space available for these fixtures is 39–78”W x 36–48”H x 148”L.

Position Types A & B appear in the following size/fixture combinations:

- Approximately 24-LF freestanding vendor-provided fixture (singular)

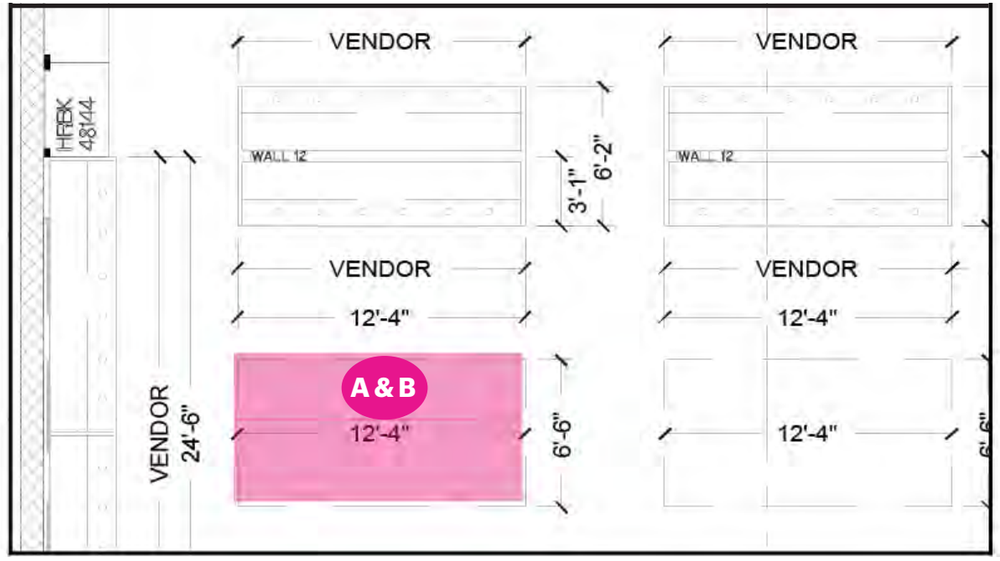



Front View



Top View

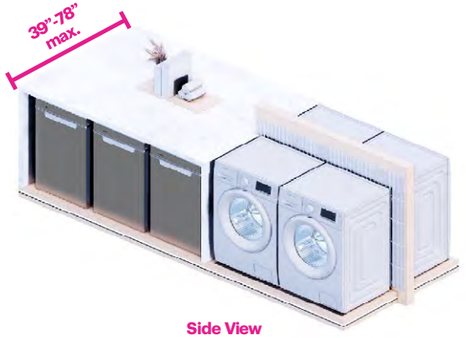

Side View

Last Updated August 12, 2026 8:20 AM | Best Buy partner and internal use only. Do not copy, publish, or distribute. The material in this document is confidential to Best Buy.

Power and Attachments:
Appliance Shell Fixture

Vendor Expectations

- Plug appliances directly into the provided outlet strips. Refer to Best Buy's fixture drawings for the placement of outlets and power troughs within each appliance shell.
- If the cords on your appliances don't reach the outlet strips, provide an approved commercial-grade power cord to plug into the receptacles.
- Use mounting rails as the preferred attachment method.

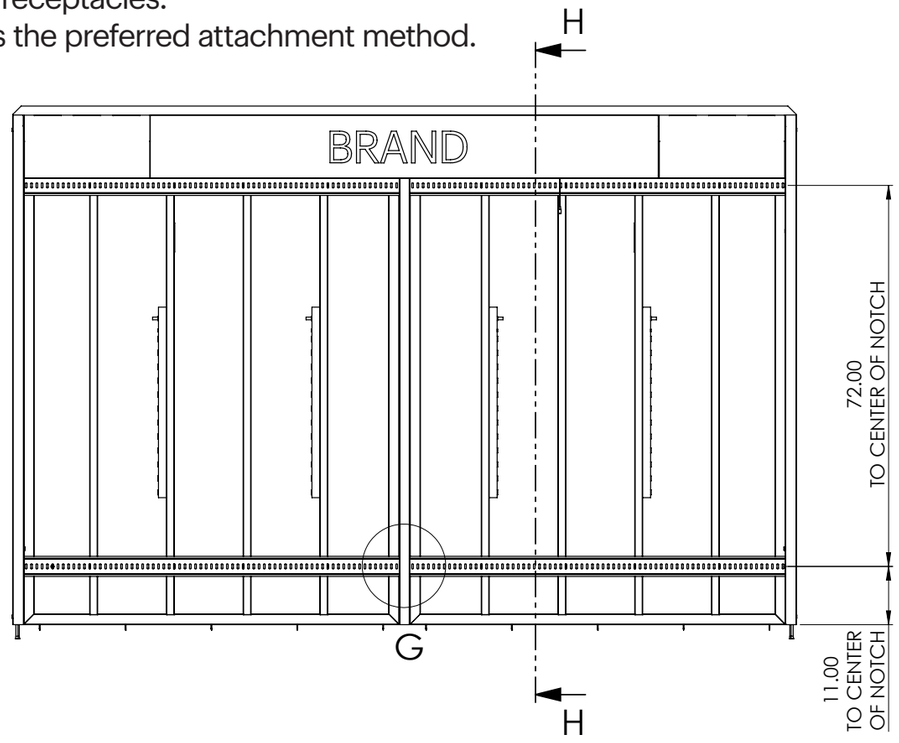

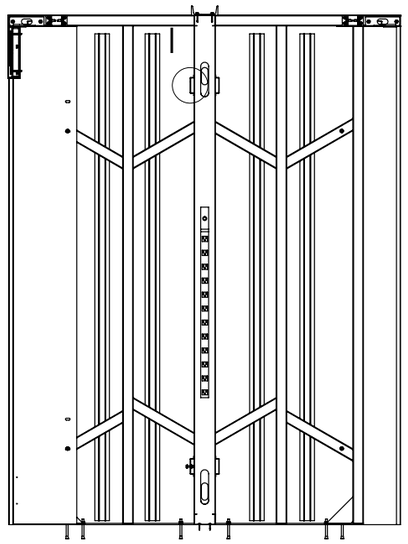

SECTION H-H
SCALE 1 : 20

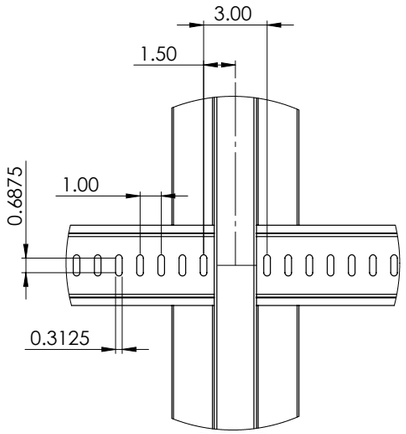

DETAIL G
SCALE 1 : 5

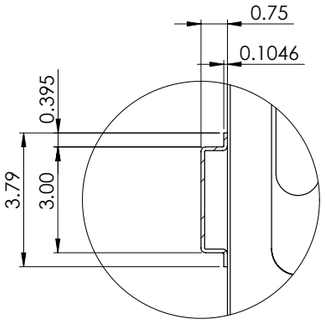

DETAIL I
SCALE 1 : 3

Last Updated August 12, 2026 8:20 AM | Best Buy partner and internal use only. Do not copy, publish, or distribute. The material in this document is confidential to Best Buy.

Power and Attachments:
Freestanding Vendor-Provided Fixture

One designated power drop will be added to each floor pad — 6” from the island — with one quadplex outlet facing the vendor-provided fixture.

Vendor Expectations

- Use a mesh sleeve to cover any power cords that run from the island to the power drop outlet.

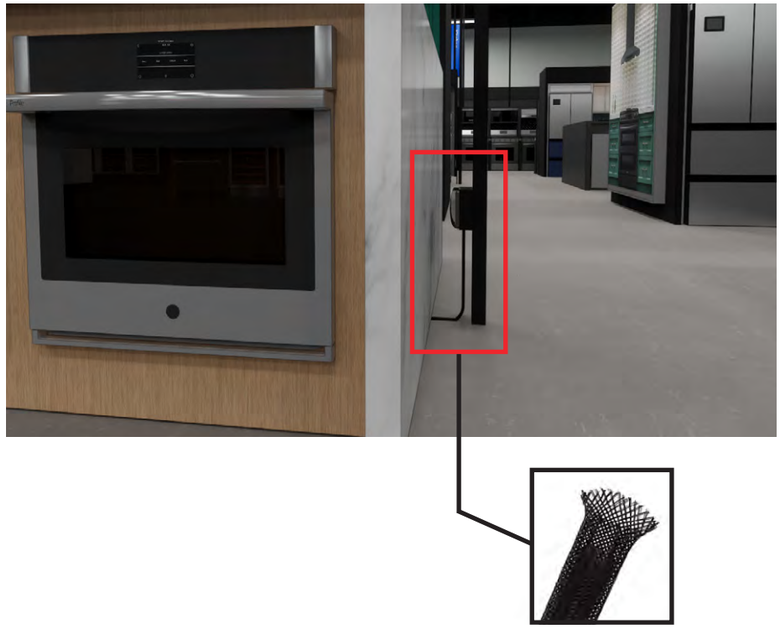



Last Updated August 12, 2026 8:20 AM | Best Buy partner and internal use only. Do not copy, publish, or distribute. The material in this document is confidential to Best Buy.

Logo Header

Two of the three appliance shells feature a logo header:
- 12’W I-Wall
- 24’W Perimeter Wall *with* Shell Header

The “24’W Perimeter Wall *without* Shell Header” does not accommodate a logo header within the shell itself due to the existing logo header already displayed on the perimeter wall.

Note: *Although the logo headers within the first two shells will obstruct sightlines to the top 12” of your presentation, we recommend designing your display to fit the entire height of your merchandisable space. This allows your presentation to seamlessly move into an appliance shell* without *a built-in header if needed in the future.*



12’W I-Wall



24’W Perimeter Wall *with* Shell Header



24’W Perimeter Wall *without* Shell Header

Last Updated August 12, 2026 8:20 AM | Best Buy partner and internal use only. Do not copy, publish, or distribute. The material in this document is confidential to Best Buy.

Logo Header

On the two appliance shells that include a logo header, the logo will be illuminated by a light panel provided and incorporated into the fixture by Best Buy.

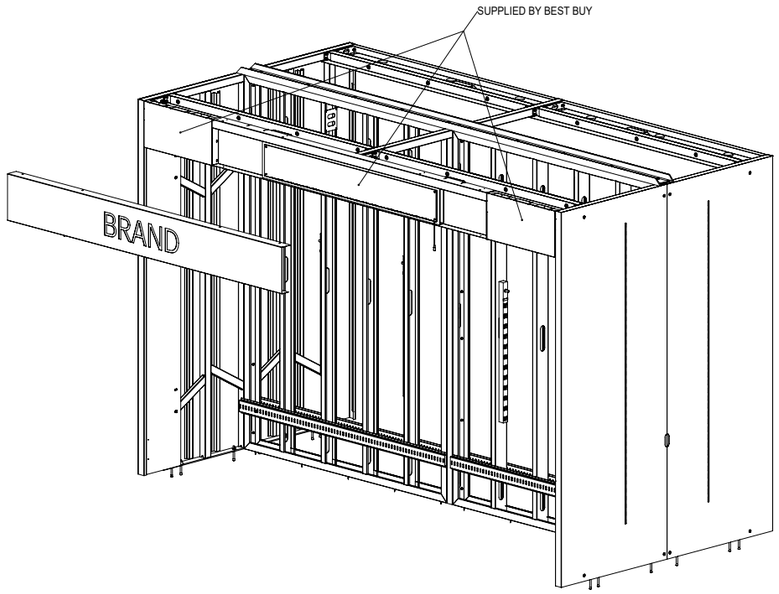

12’W I-Wall

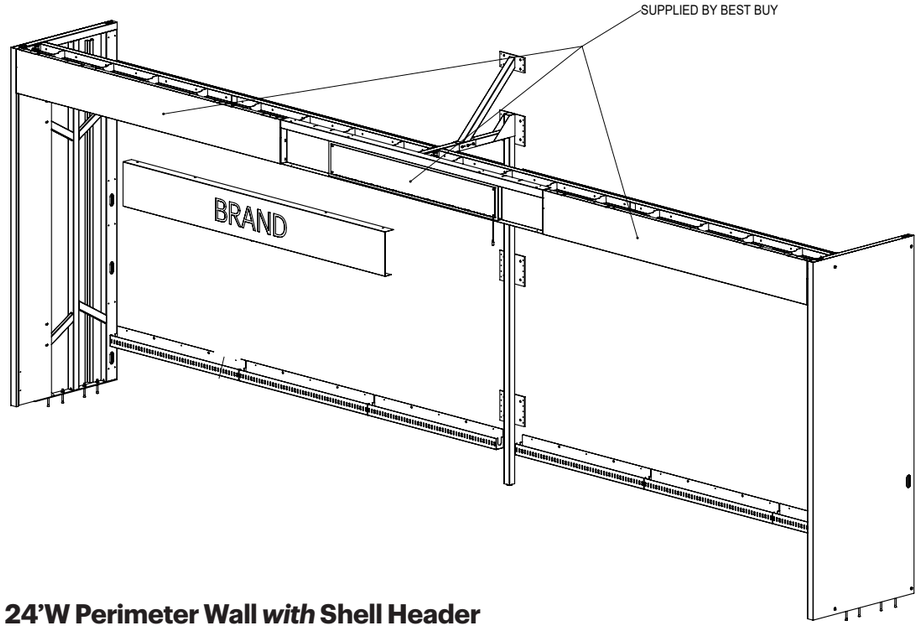

24’W Perimeter Wall *with* Shell Header

Last Updated August 12, 2026 8:20 AM | Best Buy partner and internal use only. Do not copy, publish, or distribute. The material in this document is confidential to Best Buy.

Logo Header

Vendor Expectations

- Assemble your entire vendor presentation **without removing** the appliance shell's 11"H header.
- Produce a logo header panel adhering to the size, placement and finishes below. Ask your Best Buy contact for drawings and specifications.
  - **Header size:** 96"W x 11"H
  - **Header finish:** Powdercoated PC938 Matte Black - IFS Coatings, INC PLSM 10812CN
  - **Logo size:** Maximum 91"W; maximum 6"H
  - **Logo placement:** Centered vertically and horizontally in header
  - **Letter finish:** White Light, White Optics 009 Matte

Logo Header Panel

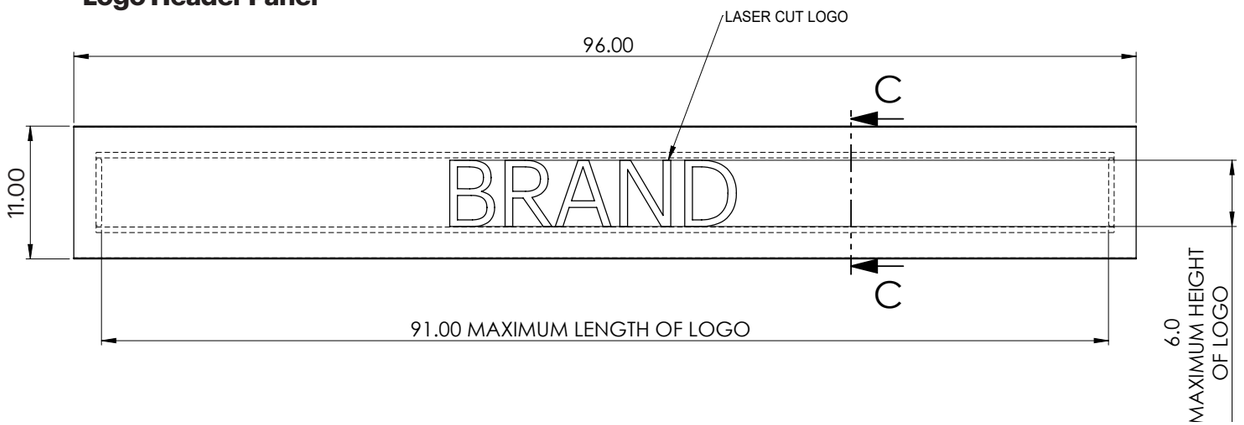

Last Updated August 12, 2026 8:20 AM | Best Buy partner and internal use only. Do not copy, publish, or distribute. The material in this document is confidential to Best Buy.

Integrated Technology

Integrated technology, including lighting brightness and color temperature, must align with the Technology Design Standards on Partner Portal. Best Buy's Technology Design Lab must approve any working electrical components.

Lighting

Perimeter Wall Fixture Expectations

- Lit logos on headers, lit subheads, and light emitted by display products and monitors *are permitted*. All other forms of lighting *are not permitted*.
- Ensure logo in primary header follows template, material and illumination specifications.
- Set all white lights at the required color temperature of 5,500K.
- Keep lights between 4,000 and 7,000 LUX.

I-Walls and Freestanding Vendor Fixture Expectations

- Uplighting, shelf lighting, backlighting, under-cabinet lighting, fixture edge soft ambient lighting, lit logos on headers, and light emitted by display products and monitors *are permitted*.
- Downlighting *is only permitted* in instances when ceiling lights are blocked.
- All other forms of lighting, including pendant light fixtures and excessive lighting *are not permitted*.
- Set all white lights at the required color temperature of 5,500K.
- Keep lights between 2,000 and 5,000 LUX.

Touch

- Ensure all interactive elements, including buttons and touch components, meet ADA requirements.

Merchandising

Vendor Expectations

- Contain all products, signage and fixtures within the shell.
  - — **12' presentation:** 143.25"W x 93.5"H x 30"D
  - — **24' presentation:** 289.25"W x 93.5"H x 30"D
- Support all products, display or salable, with a proximally located electronic shelf label (ESL).
- Ensure the product serves as the hero of the presentation.
- Include your choice of Demo, Display or Dead Mock Display product(s).
  - — **Demo:** An out-of-box product feature that allows for an interactive experience.
  - — **Display:** A non-interactive product included to show materiality, form factor, colorways and sizing.
  - — **Dead Mock Display:** A non-interactive 3D model of salable product intended to show form factor, colorways and sizing.
- Ensure all demo experiences are ADA-compliant.
- Props may be used sparingly and intentionally so they never distract from the product experience. Select only durable, non-breakable materials (no glass, mirrors, ceramics, or dried plants) that are easy to clean, resistant to wear, and securely anchored with anti-shrink measures such as adhesives or tethers.
- Set appliances in shell presentations to "demo" mode to provide a realistic experience when customers open and interact with the product.



Find more details and dimensions in these guides on Partner Portal:

Technology Design Standards | **ESL Pricing**

QR Code Guidelines | **Copy & Claims Guidelines**

Last Updated August 12, 2026 8:20 AM | Best Buy partner and internal use only. Do not copy, publish, or distribute. The material in this document is confidential to Best Buy.

Graphics

Vendor Expectations

- Deploy graphics to tell a cohesive brand story.
  - **Substrate:** 20mil Magnetic Vinyl, White
- Use imagery that evokes your brand without distracting from your display product.
- Include minimal copy, if desired. Copy must fall at least 3’ above the finished floor and be unobstructed by product.
- Comply with the Copy & Claims Guidelines in Partner Portal.
- Include, if desired, one QR code per four linear feet. Ensure your code links to BestBuy.com or a closed microsite created only for Best Buy.

Best Practices

- Ensure the product serves as the hero of the presentation; all signage should act in support.
- Aside from the logo header, use logo sparingly.
- Feature each signage element at its most impactful moment of the customer’s journey. (i.e. Copy-heavy signage should fall after a customer’s engagement with the product.)

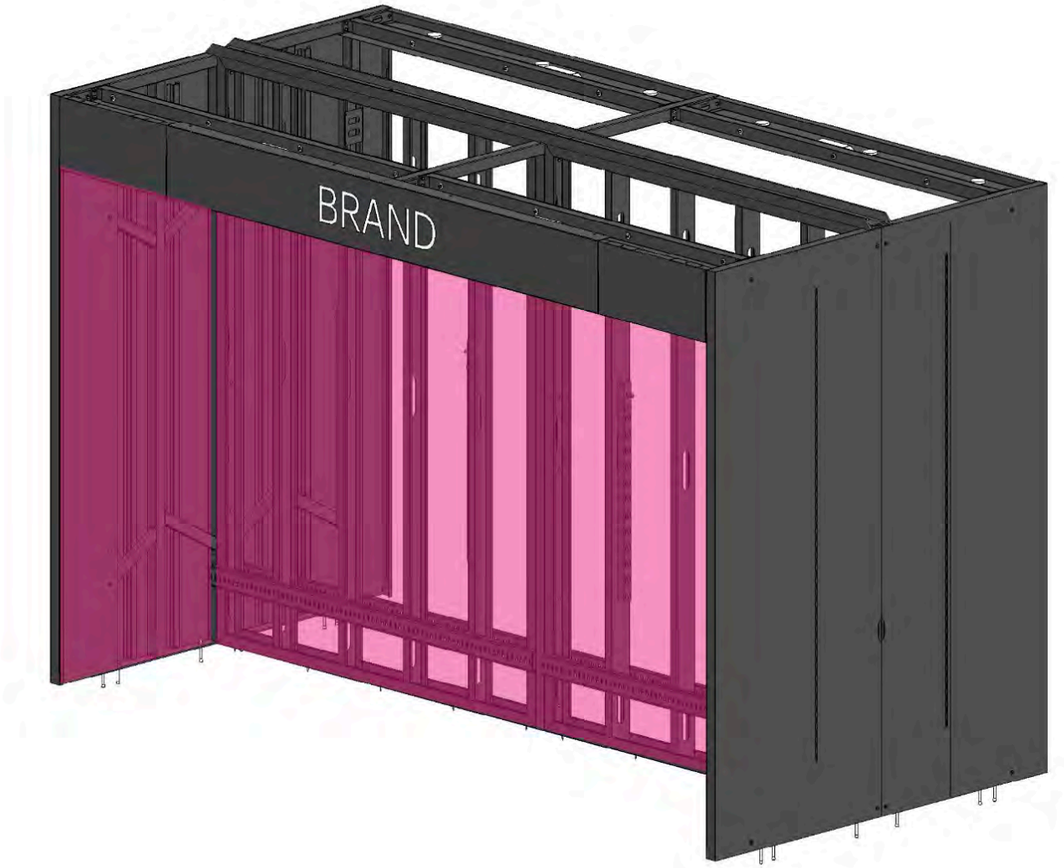

Find more details and dimensions in this guide on Partner Portal:

Copy & Claims Guidelines

Last Updated August 12, 2026 8:20 AM | Best Buy partner and internal use only. Do not copy, publish, or distribute. The material in this document is confidential to Best Buy.

Graphics:
POP

Vendor Expectations

- Display overlay clings, if desired, on any screens and/or buttons to simulate a “powered” experience.
  Note: *Clings may cover but not overhang screens or buttons.*
- Include up to one external POP graphic on the product top (range only) and up to one external POP graphic on the product front to highlight features and differentiators.
  Note: *POP graphics are permitted on the product interior as long as they are not visible until the product is opened.*
- Comply with the Copy & Claims Guidelines in Partner Portal.





Overlay Cling

External POP

Size: 8.5”W x 11”H or smaller
Placement: Lower right side of appliance top (range only) and/or upper right side of appliance front.

Find more details and dimensions in this guide on Partner Portal:

Copy & Claims Guidelines

Last Updated August 12, 2026 8:20 AM | Best Buy partner and internal use only. Do not copy, publish, or distribute. The material in this document is confidential to Best Buy.

Car Audio

Form Factor

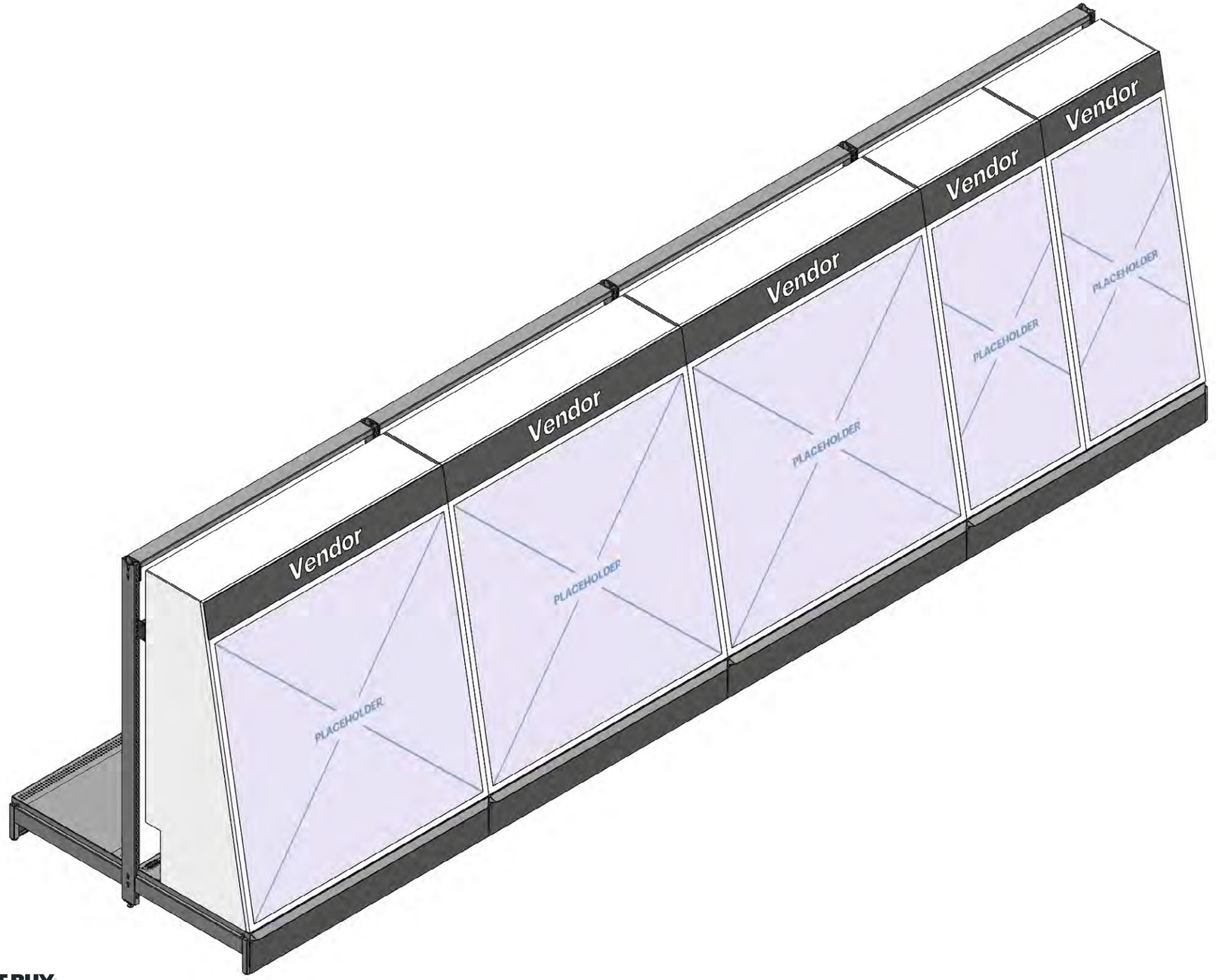

Transition to a **vendor-provided display format** in which vendor partners design and maintain cabinet sections.

- Vendors can build cabinets in 2’ wide increments depending on desired assortment
- Vendors can use the front panel as a blank canvas to creatively showcase product, functionality, and brand messaging
- Encourage external collaboration between vendors that don’t offer a full suite of car audio products

NOTE: *Cabinet merchandising/product assortment shown is for **reference only**. Final design to be determined by vendor.*

Last Updated August 12, 2026 8:20 AM | Best Buy partner and internal use only. Do not copy, publish, or distribute. The material in this document is confidential to Best Buy.

Form Factor (continued)

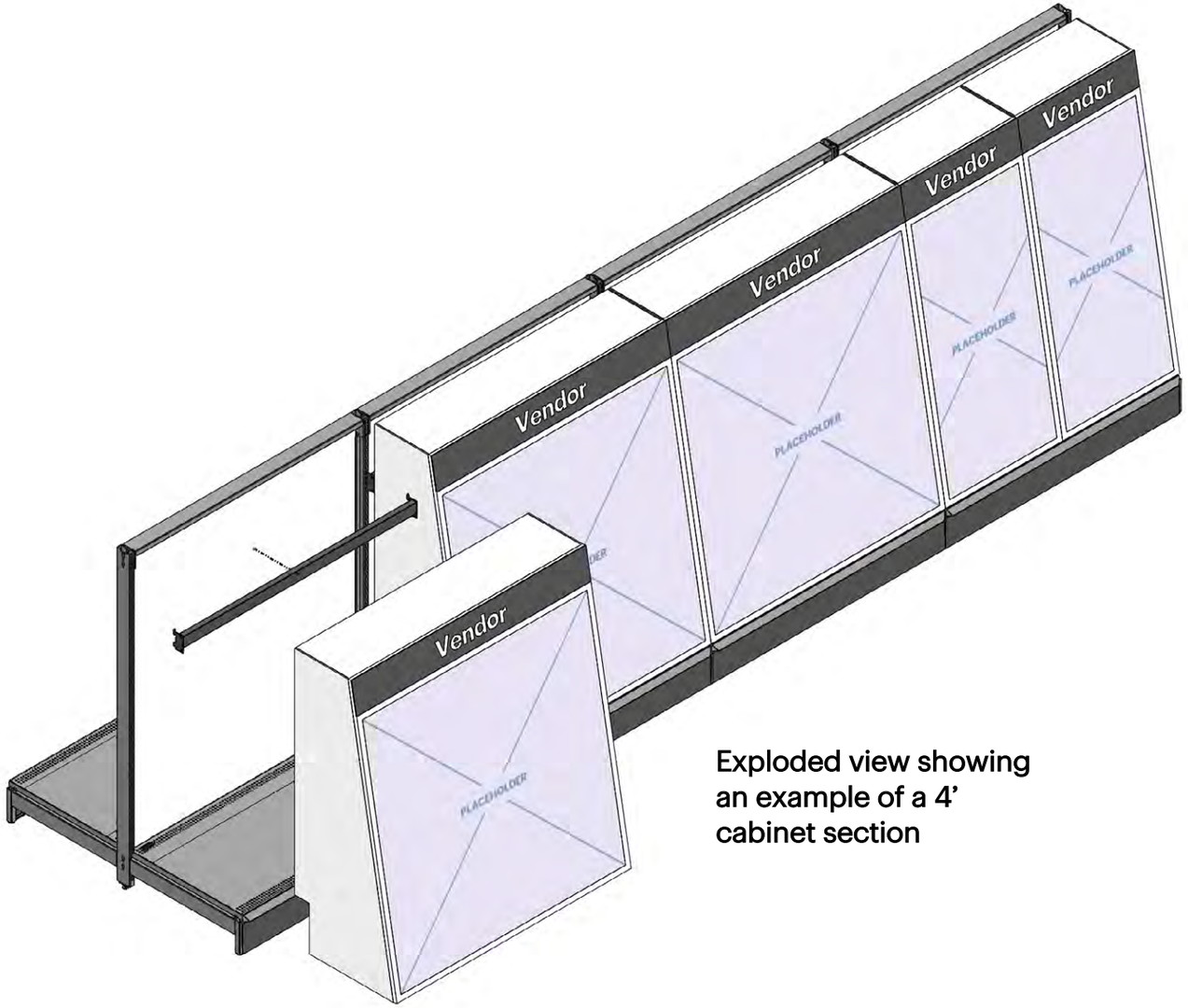

Exploded view showing an example of a 4’ cabinet section

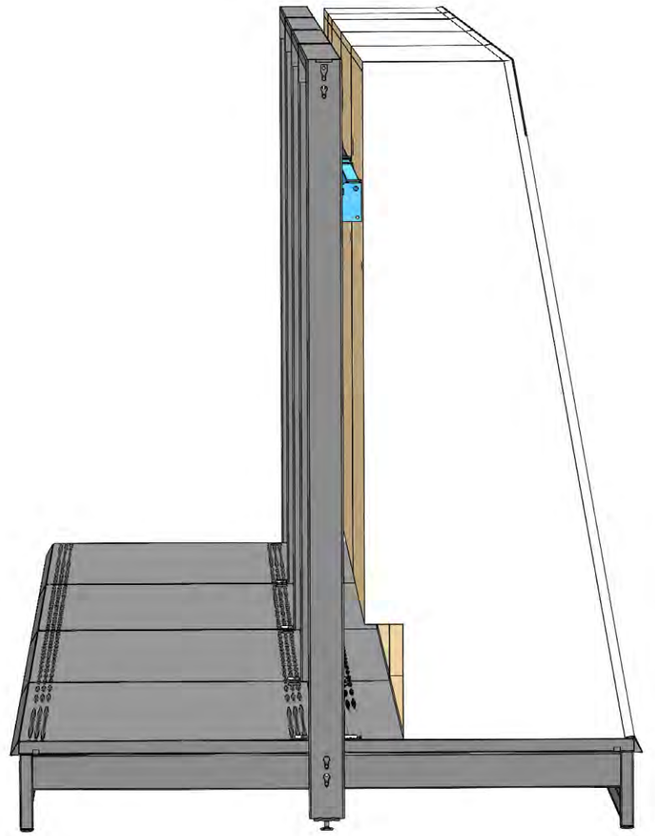

Cabinets attach to standard depth gondola via tie bar (provided by Best Buy)

NOTE: *Cabinet merchandising/product assortment shown is for **reference only**. Final design to be determined by vendor.*

Last Updated August 12, 2026 8:20 AM | Best Buy partner and internal use only. Do not copy, publish, or distribute. The material in this document is confidential to Best Buy.

Cabinet Build Details

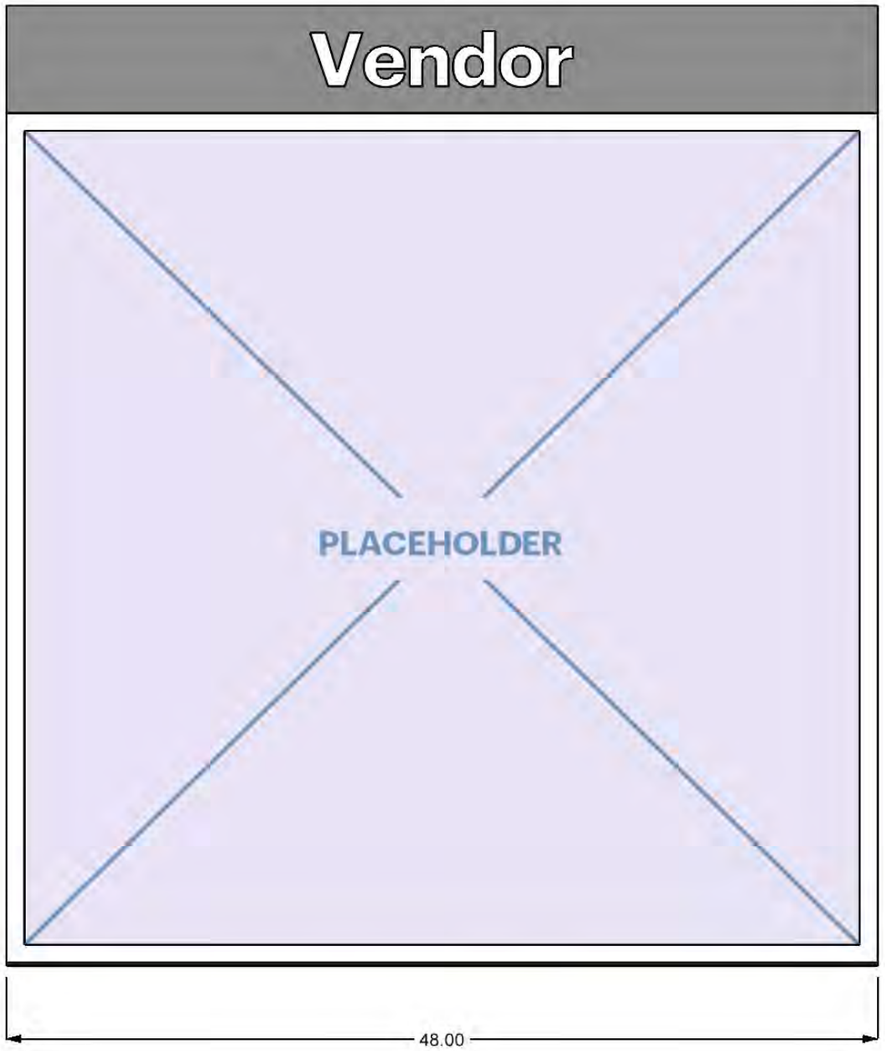

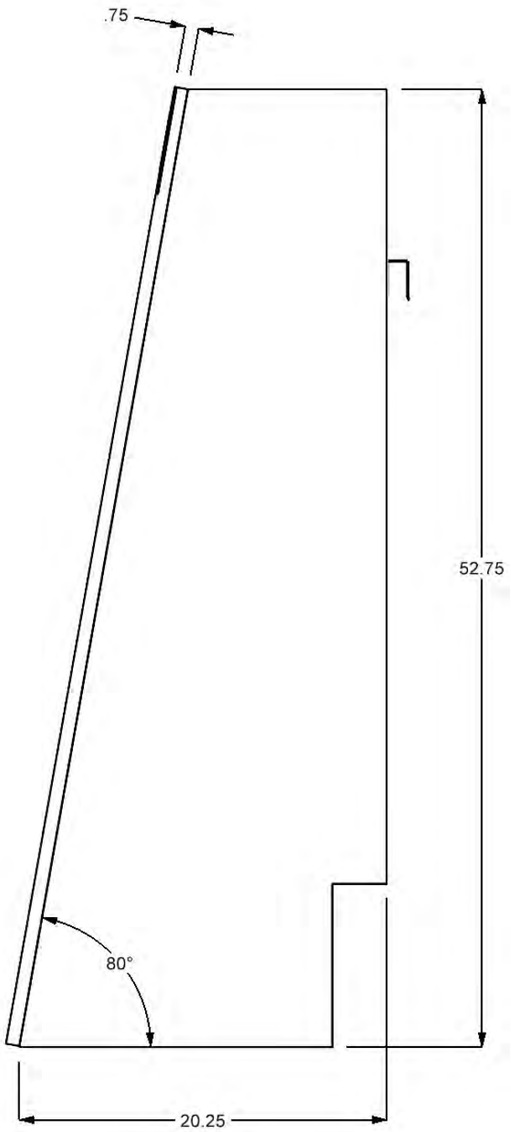

Vendor-provided cabinets must follow a prescribed form factor and finish schedule to establish consistency across the gondola section.

- Overall and critical dimensions shown on drawing views (4’ wide example shown)
- Cabinet frame must be built from MDF and finished in Designer White laminate
- Brackets on cabinet backside must be included – these will be used to attach cabinet to tie bars pre-installed on gondola run
- Electronics package must be UL or ETL listed and contained within cabinet, and able to plug into a single 120v outlet on a power strip tucked behind cabinet
- Cabinet must be provisioned for airflow to prevent overheating

NOTE: *All dimensions shown on this page are in **inches**. CAD files are available upon request for these parts.*

Last Updated August 12, 2026 8:20 AM | Best Buy partner and internal use only. Do not copy, publish, or distribute. The material in this document is confidential to Best Buy.

Cabinet Build Details (continued)

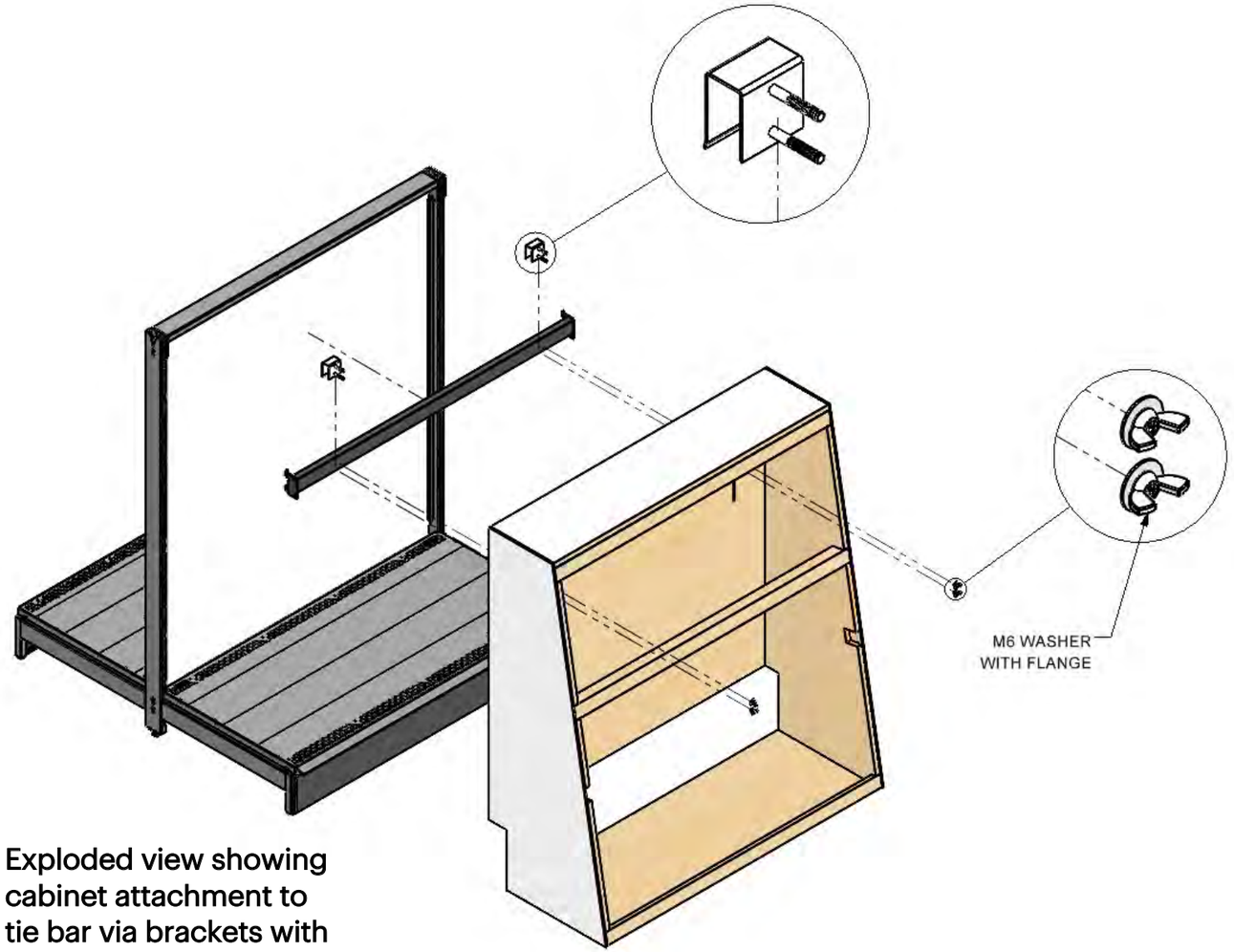

Exploded view showing cabinet attachment to tie bar via brackets with threaded studs

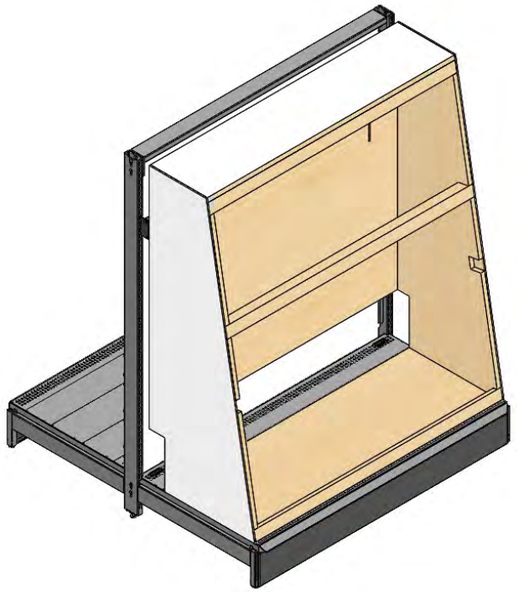

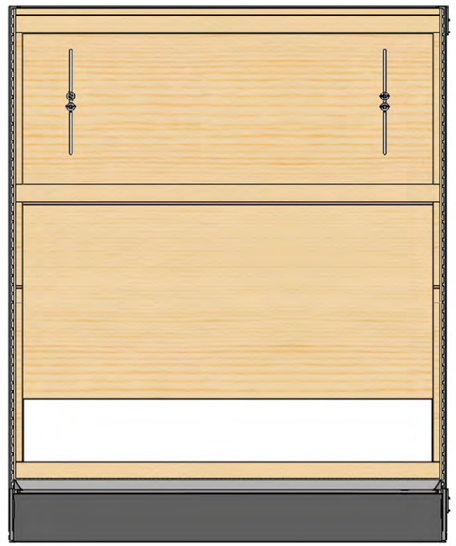

Last Updated August 12, 2026 8:20 AM | Best Buy partner and internal use only. Do not copy, publish, or distribute. The material in this document is confidential to Best Buy.

Cabinet Build Details (continued)

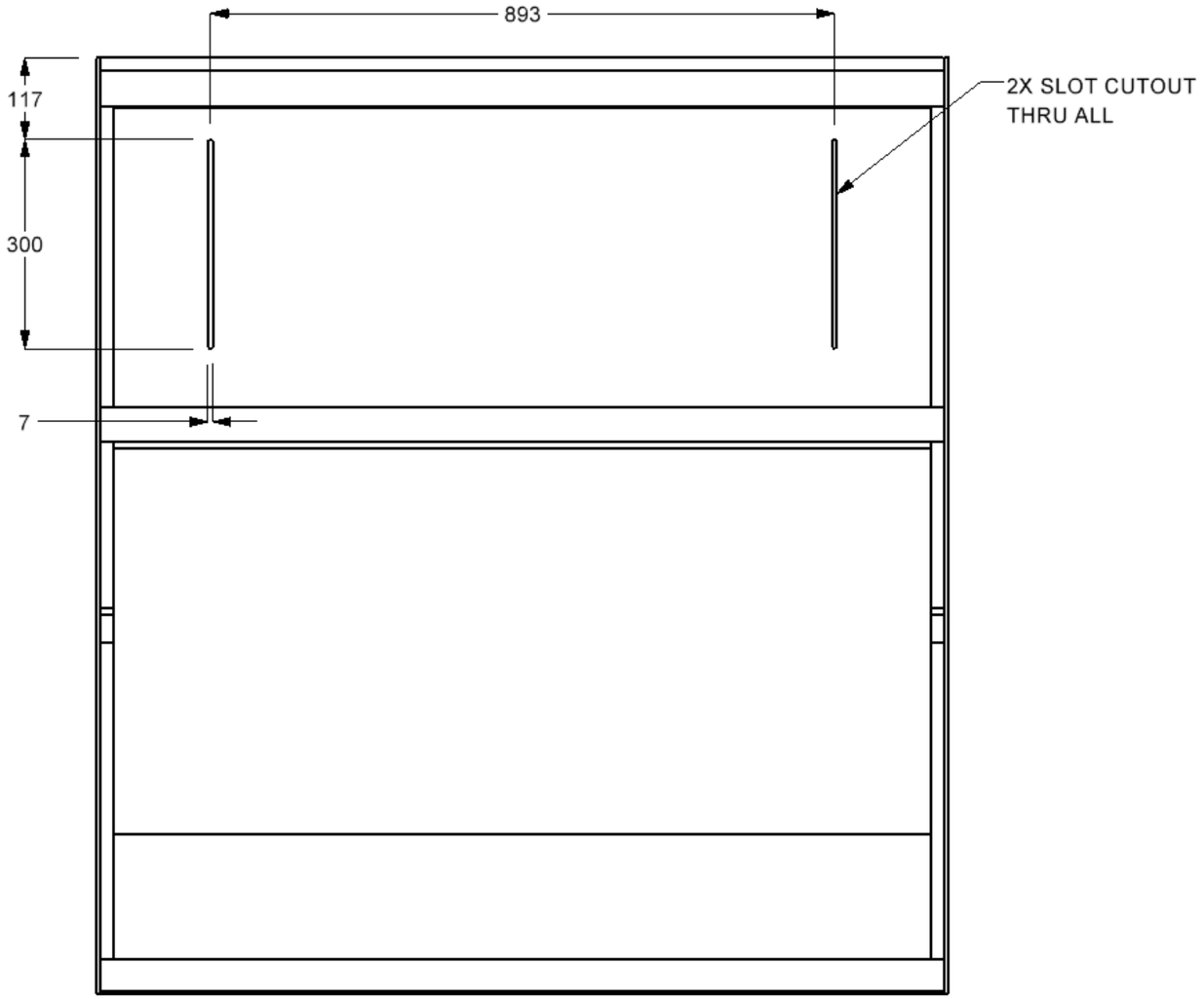

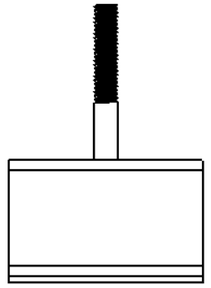

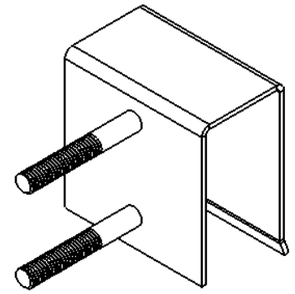

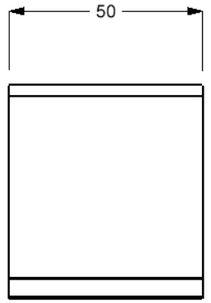

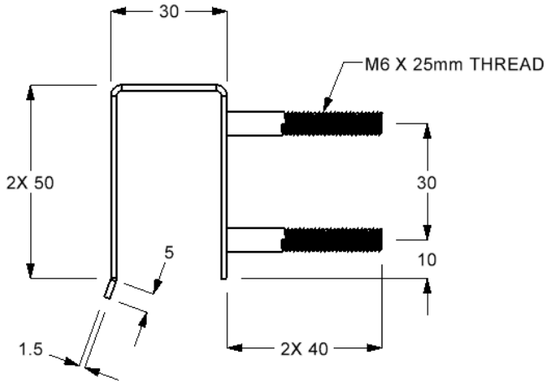

NOTE: *All dimensions shown on this page are in **millimeters**. CAD files are available upon request for these parts.*

Last Updated August 12, 2026 8:20 AM | Best Buy partner and internal use only. Do not copy, publish, or distribute. The material in this document is confidential to Best Buy.

Cabinet Presentation and Branding Guidelines

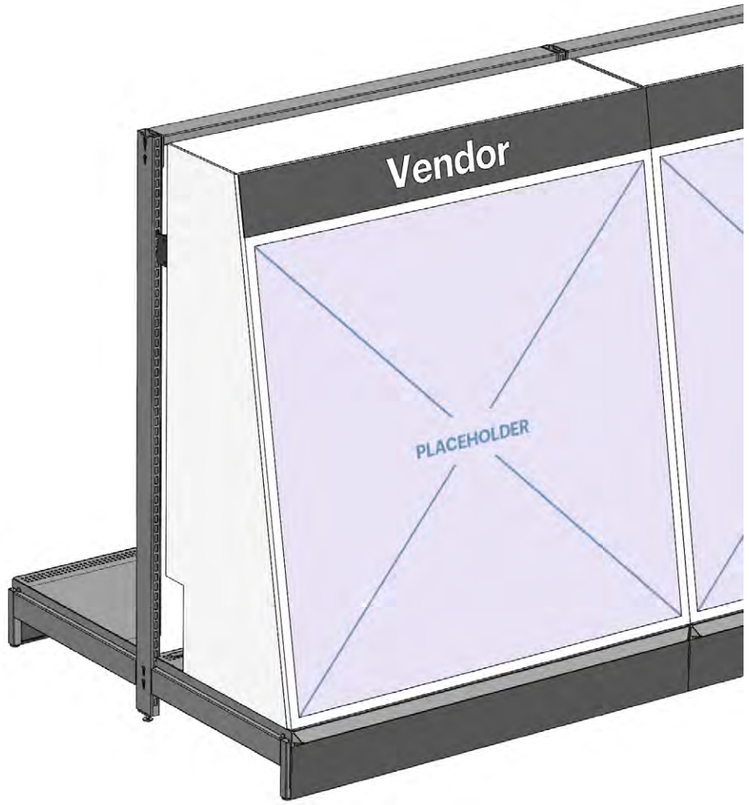

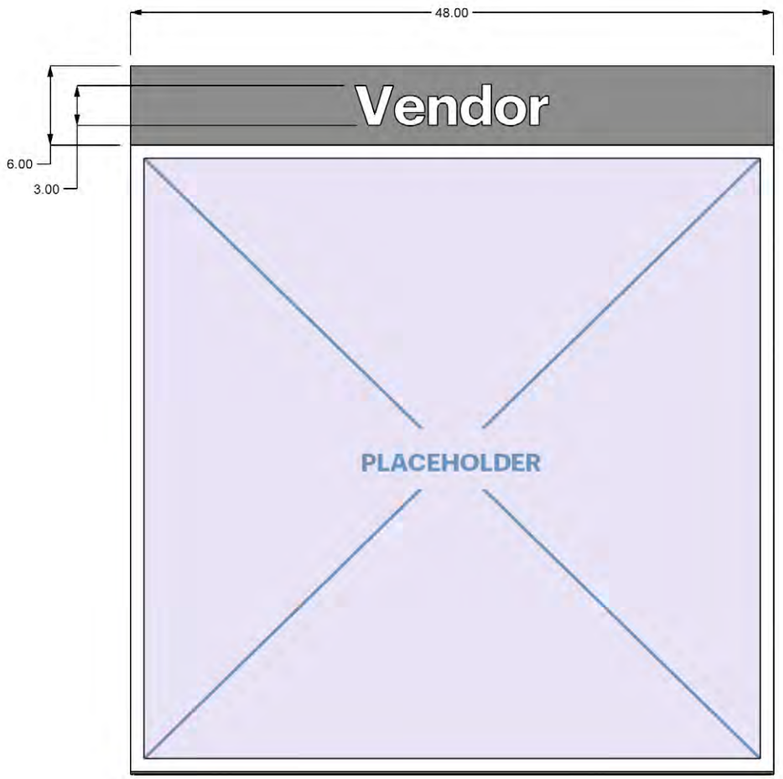

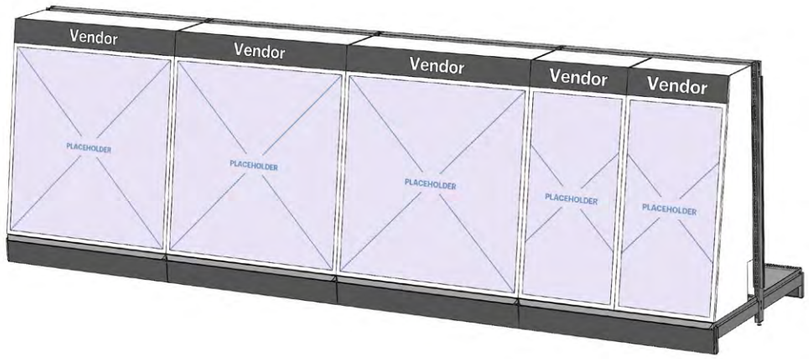

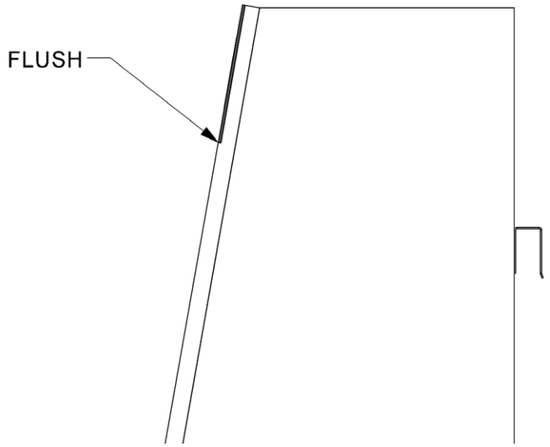

Vendor-provided front panels must also follow a prescribed form factor and finish schedule to establish consistency across the gondola section.

- 6” black band on top of panel for logo placement
  - 3mm Alpolic polymetal material – BLX Black finish
- 3” allowable logo height – white vinyl
  - Logo centered vertically and horizontally in band
- Black band should sit flush with front panel as shown in detail view and in Solidworks model
- Vendors are encouraged to utilize touch screens, switch buttons, and other interactive components at their discretion to select and demo products

NOTE: *Cabinet merchandising/product assortment shown is for **reference only**. Final design to be determined by vendor.*

Last Updated August 12, 2026 8:20 AM | Best Buy partner and internal use only. Do not copy, publish, or distribute. The material in this document is confidential to Best Buy.

Technology Callouts

All displays are required to follow existing BBY Technology Standards as well as the following specific to this space.

IMPORTANT - The display and its parts should be able to pass UL certification and testing as required.

Power & Components –

- All power supplies and components must be UL listed.
- No bare power wires, terminals, fuses, screw terminals, or distribution.
- Power connections for SKU's must be terminated in a quick connector.
  - No butt splicing, screw terminals, etc.
- No daisy chained power supplies or power strips.
- No power whips or extensions.
- Power for the display can and may be shared with other displays in the space.

Functionality & Access –

- All displays shall be designed with quick and easy SKU in/out by minimally trained associates.
- All SKU in/out should be able to be completed with minimal number of tools and with no specialty tools.
- All electronics to support the display need to be easily accessed.
- All products with lighting built in must not flash or change colors quickly when not actively being interacted with by a customer.

Last Updated August 12, 2026 8:20 AM | Best Buy partner and internal use only. Do not copy, publish, or distribute. The material in this document is confidential to Best Buy.

Graphics

Vendor Expectations

- Vendors must adhere to the header standard.
- A QR code lockup is required in the top left corner of the fixture and must follow key art. Partner with Best Buy contact for files.
- The background should be neutral in color and texture, avoiding any distractions.
- Product details should be presented as a bulleted list, with a maximum of six key points per product.

Merchandising

Vendor Expectations

- Demo controls should appear on the top left of the fixture.
- Support all display products with a proximally located peg label-sized Electronic Shelf Label (ESL)
- Product information and ESL should be justified to the bottom left of the display products.

***Note**: Printed representational stand-ins of products are not permitted.*

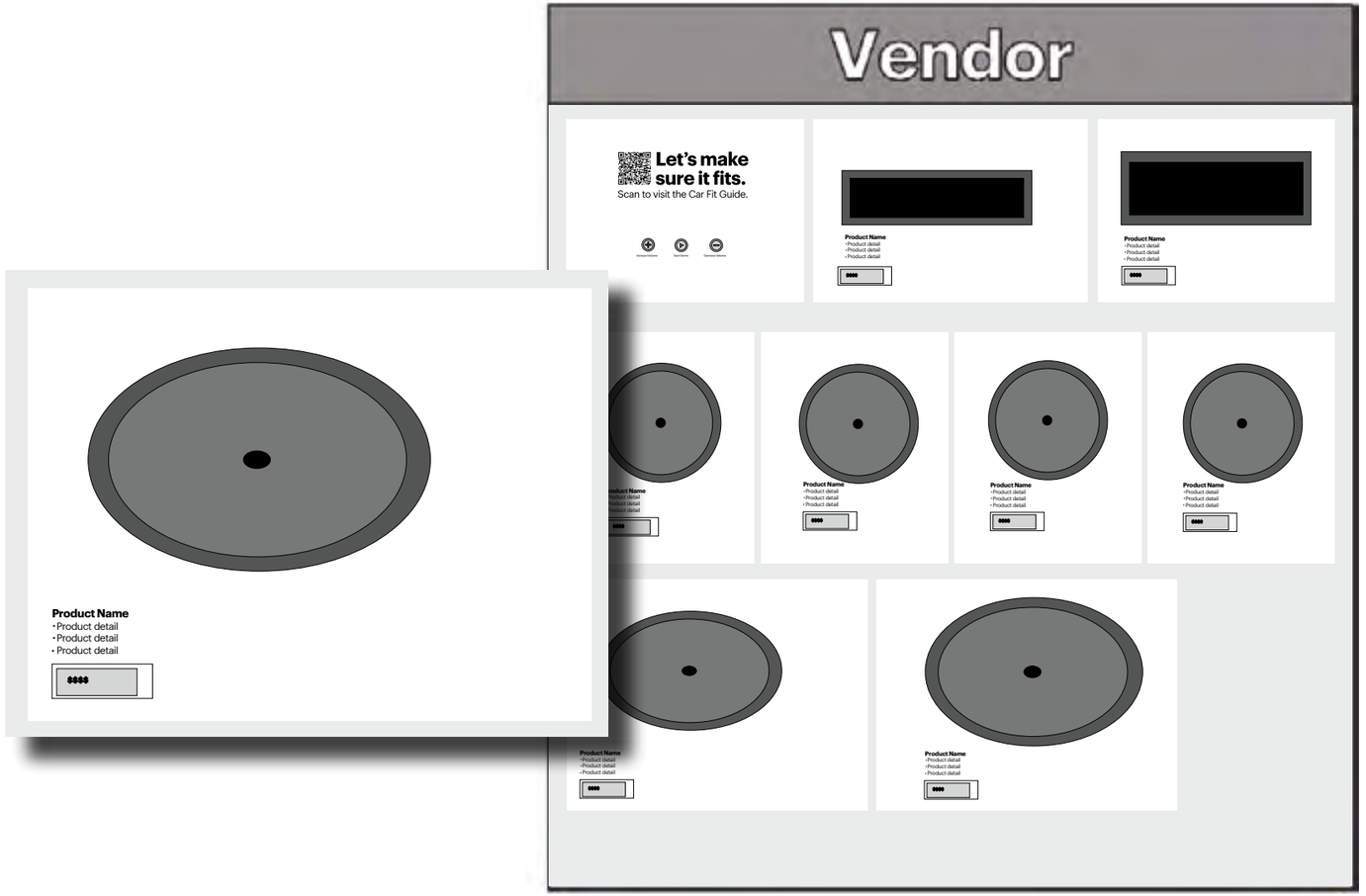

Find more details and dimensions in these guides on Partner Portal:

ESL Pricing

QR Codes Guidelines

Last Updated August 12, 2026 8:20 AM | Best Buy partner and internal use only. Do not copy, publish, or distribute. The material in this document is confidential to Best Buy.

Center of Store
Brand Zone

Fixture Overview

COS Brand Zones offer an opportunity to activate standalone vendor experiences in the center of store.

They are created in the spacial void between two Best Buy-provided wall fixtures.

Vendor Expectations

- Contain all fixtures and signage within the activation space of 8’3”W x 5’6”H x 8’3”D.
- Ensure space and fixtures are ADA-compliant.
  - — GCA & IBC Code require aisles serving elements (“architectural components”) to be at least 48”W.
- Keep wall fixtures clear. Best Buy-designated vertical vendor graphics are the only attachments permitted.

You will need details and dimensions in this guide on Partner Portal:

Architecture Standards

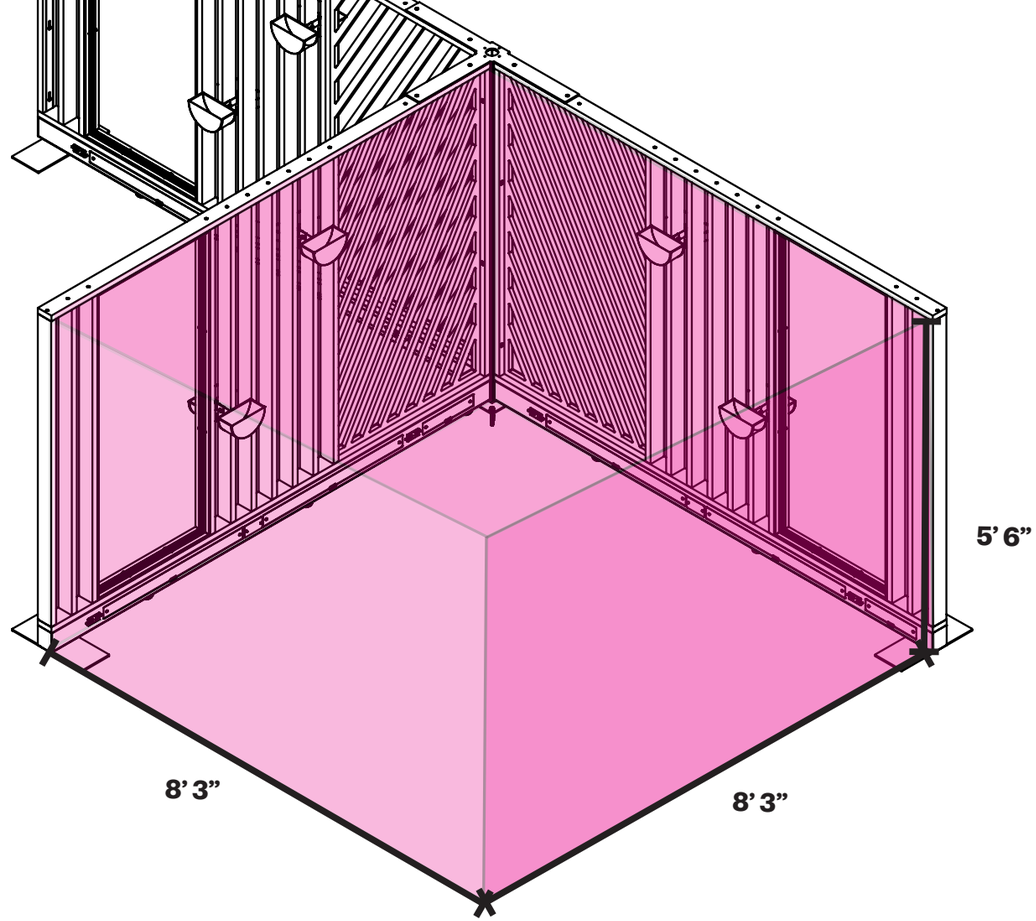

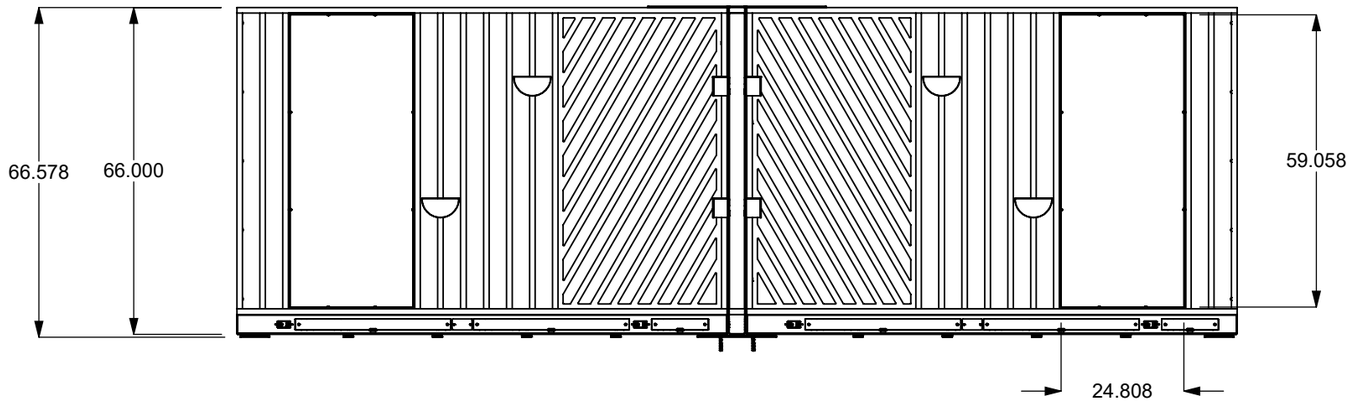

Last Updated August 12, 2026 8:20 AM | Best Buy partner and internal use only. Do not copy, publish, or distribute. The material in this document is confidential to Best Buy.

Space Planning

COS Brand Zones are small areas of activation. In order to maintain ADA aisle spacing compliance, fixture dimensions and placement must be fully considered.

Vendor Expectations

- Code require aisles serving elements (“architectural components”) to be at least 48”W.
- If wall-abut fixtures are designed at 2’3” D, maximum island fixture dimensions are 2’ W x 2’ D x 5’6” H.
- Maximum island fixture dimensions are 4’ 3” W x 4’3” D x 5’6” H.
  - — Maximum dimension island negates the opportunity for any merchandising, fixtures or dimensional graphic abut to wall.
- Free space must be maintained around Vertical vendor graphics. *See Graphics page for details.*

You will need details and dimensions in this guide on Partner Portal:

Architecture Standards

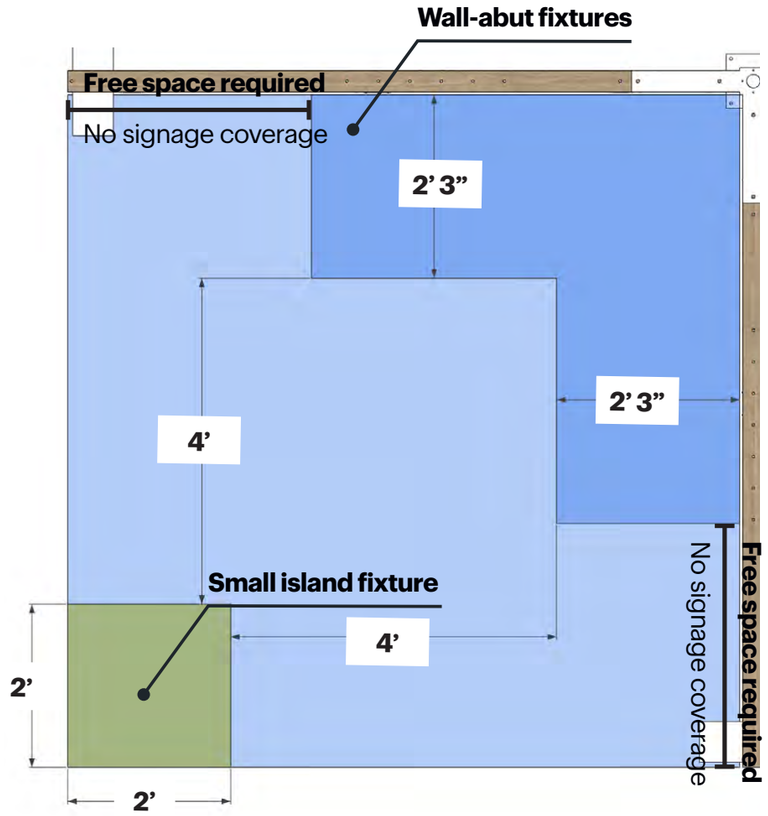

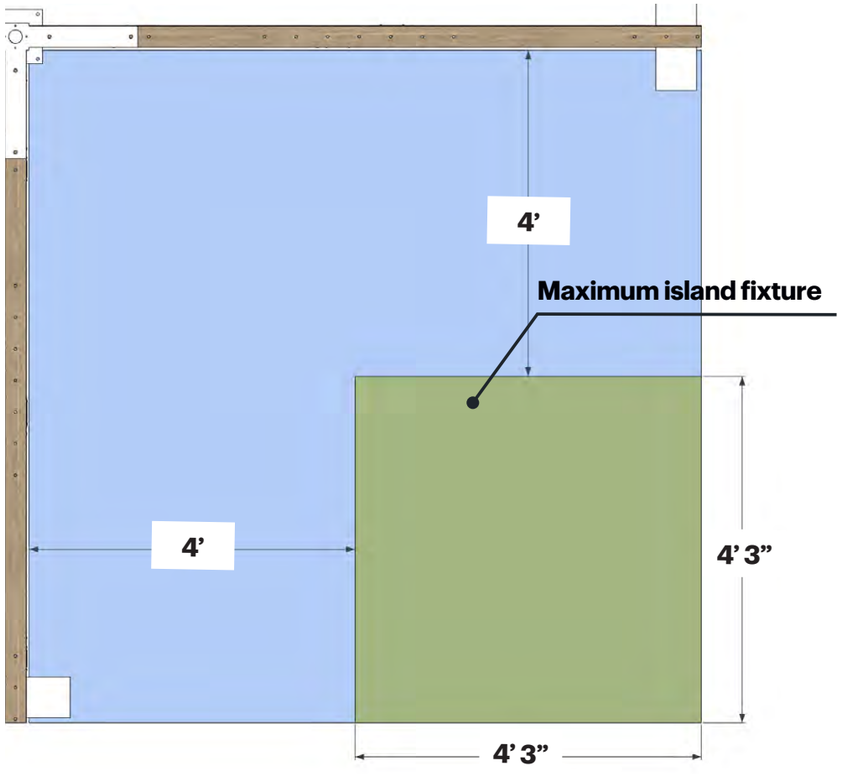

Last Updated August 12, 2026 8:20 AM | Best Buy partner and internal use only. Do not copy, publish, or distribute. The material in this document is confidential to Best Buy.

Structural Support and Anchoring

Vendor Expectations

- Vendors must determine if fixture tipping is a concern and if ballasts, bracing or anchoring is needed:
    - Minimum overturning factor of safety (FS) is 1.5 if minimum FS cannot be achieved through self-weight alone.
- Ballasts should be equally distributed in the bottom of tip-prone fixtures.
- If a fixture is deemed a tipping hazard and not supported by a ballast or bracing it should be anchored.
    - If placing in same location as previous fixture, legacy anchor patterns will be required to ensure a minimum of 4” separation from previous anchor points.

Last Updated August 12, 2026 8:20 AM | Best Buy partner and internal use only. Do not copy, publish, or distribute. The material in this document is confidential to Best Buy.

Power

Vendor Expectations

- Each wall contains 2 duplex receptacles providing both continuous power and controlled (EMS power and 24/7) on a 20 AMP circuit split to both sides of each wall segment.
- Fixtures, signage or presentation elements located remote from walls cannot be powered.

LEGEND	
⊖	CONTINUOUS POWER DUPLEX RECEPTACLE 20 AMP
⊖	CONTROLLED POWER DUPLEX RECEPTACLE 20A

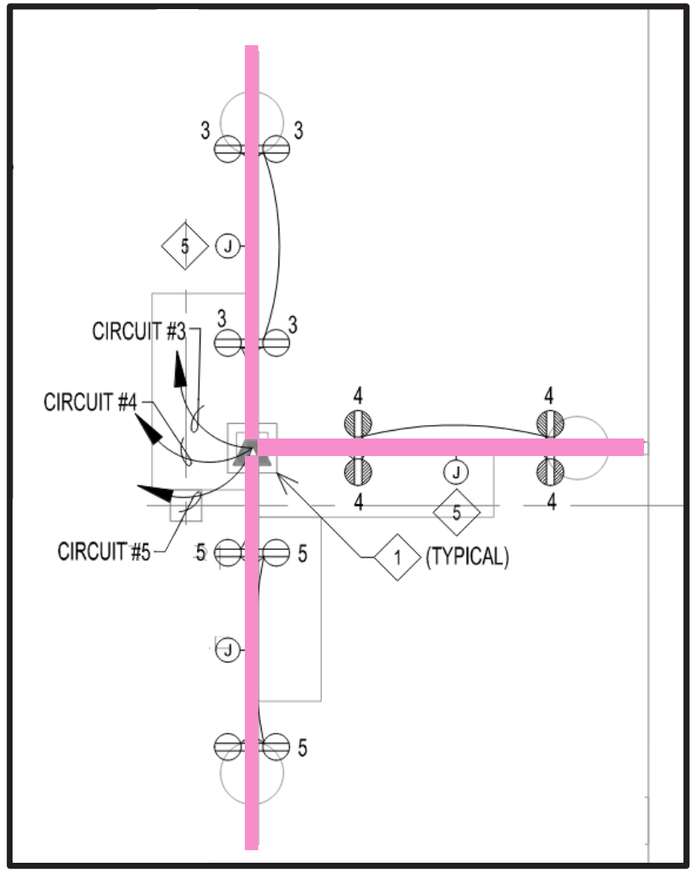

Last Updated August 12, 2026 8:20 AM | Best Buy partner and internal use only. Do not copy, publish, or distribute. The material in this document is confidential to Best Buy.

Graphics

Vendor Expectations

- Produce two vertical graphics per Brand Zone quadrant.
  - — Follow approved graphic template on next page.
- Other product information and wayfinding signage is created at the discretion of the vendor.
- Keep all copy 26” or higher from floor.

Best Practices

- Ensure the product serves as the hero of the presentation; all signage and collateral should act in support.
- Beyond the vertical graphics, use vendor logos sparingly.
- Feature each signage element at its most impactful moment of the customer’s journey. (i.e. Copy-heavy signage should fall after a customer’s engagement with the product.)

You will need details and dimensions in this guide on Partner Portal:

Copy & Claim Guidelines

Vendor Signage

This design can be paired only with itself or with an image-only option.

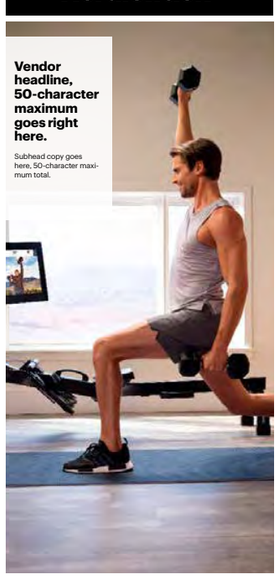

This design can be paired only with itself or with an image-only option.

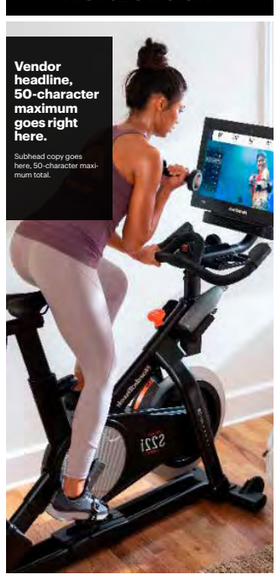

This design can be paired with any other option.



This design can be paired only with an image-only option.

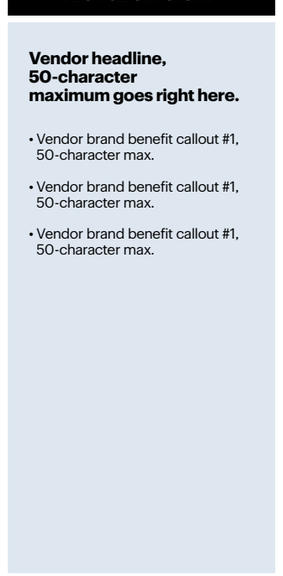

Vertical Graphic Examples

Last Updated August 12, 2026 8:20 AM | Best Buy partner and internal use only. Do not copy, publish, or distribute. The material in this document is confidential to Best Buy.

Graphics

This design can be paired only with itself or with an image-only option.

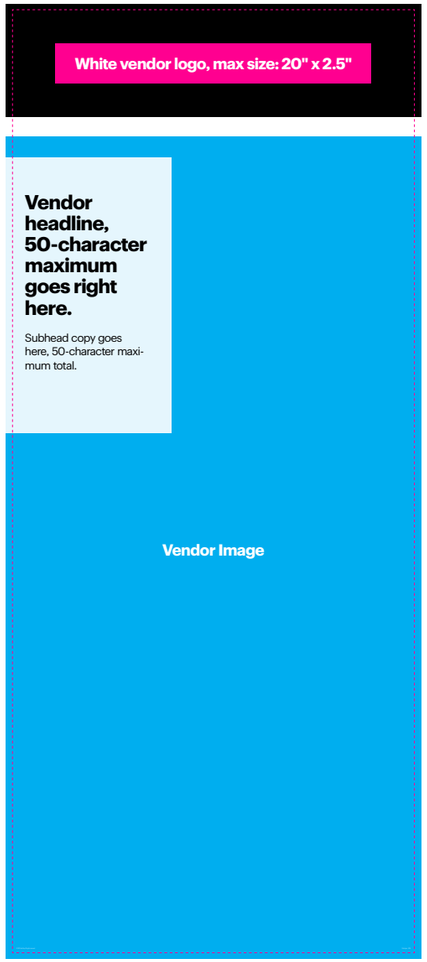

This design can be paired only with itself or with an image-only option.

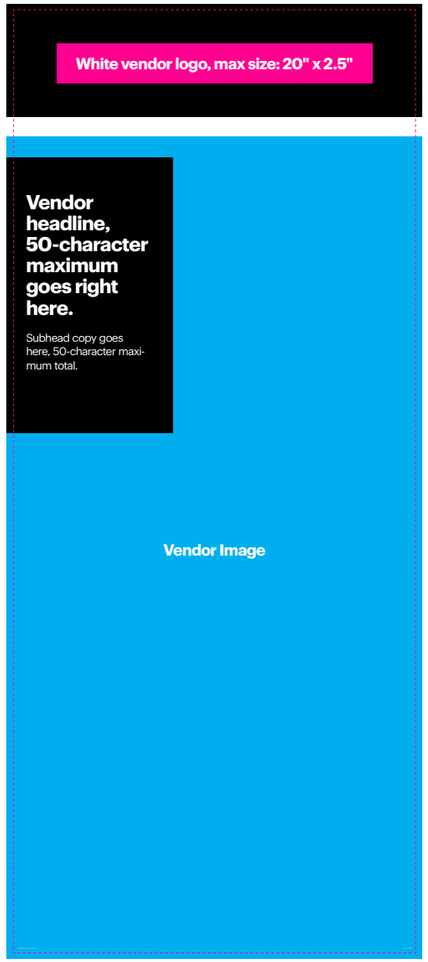

This design can be paired with any other option.

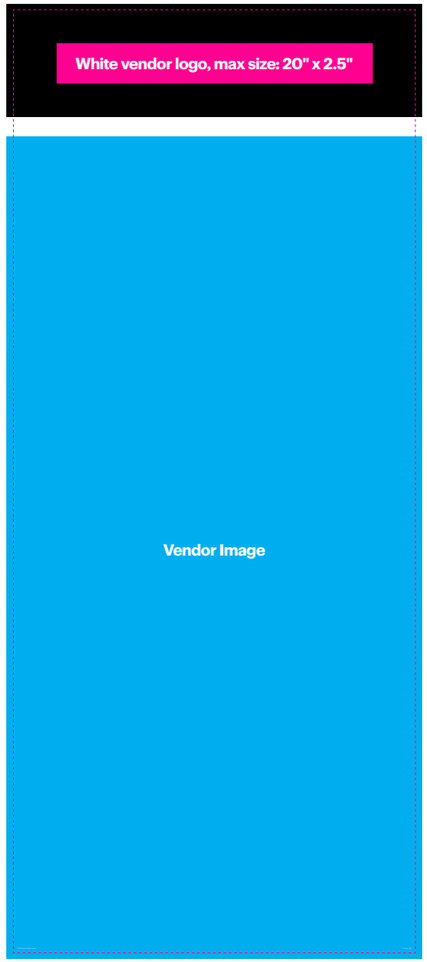

This design can be paired only with an image-only option.

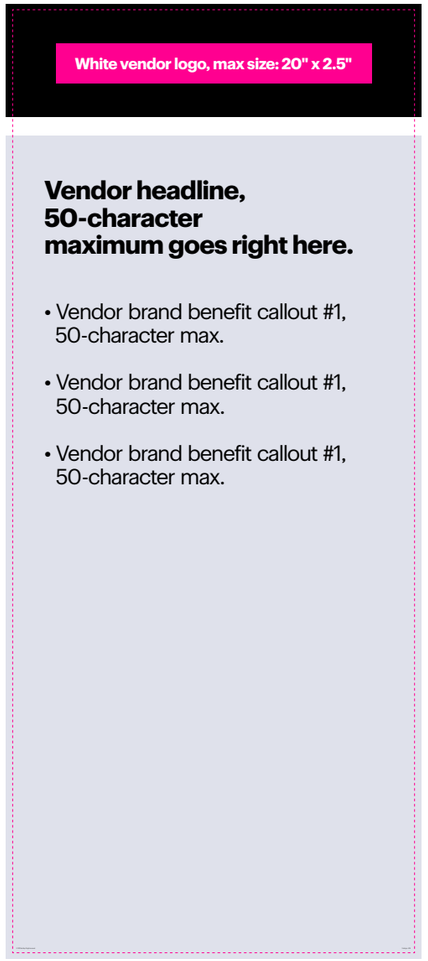

Flat size: 26.313" x 60.438"
Finished size: 25.438" x 59.688"
Substrate: 10oz. Aberdeen Heavy Knit, White
Color: CMYK
Finishing: Sew or heat weld 3mm width Keder around the entire graphic.

Last Updated August 12, 2026 8:20 AM | Best Buy partner and internal use only. Do not copy, publish, or distribute. The material in this document is confidential to Best Buy.

Merchandising

Vendor Expectations

- Contain all products, fixtures and signage within the designated footprint of 8’3”W x 8’3”D.
  - — Do not extend above the fixture wall height.
  - — Do not cover or obscure vertical graphics.
- Include your choice of Demo, Display or Dead Mock Display product(s).
  - — **Demo:** An out-of-box product feature that allows for an interactive experience.
  - — **Display:** A non-interactive product included to showcase materiality, form factor, colorways and sizing.
  - — **Dead Mock Display:** A non-interactive 3D model of salable product intended to showcase form factor, colorways and sizing.
- No backlighting, downlighting or under-cabinet lighting is permitted. Other forms of lighting are allowed.



Last Updated August 12, 2026 8:20 AM | Best Buy partner and internal use only. Do not copy, publish, or distribute. The material in this document is confidential to Best Buy.

Merchandising

Vendor Expectations

- Ensure product is the hero of the presentation. Do not crowd with graphics or copy.
- Support all products, display or salable, with a proximally located electronic shelf label (ESL).
- Design your display components with modularity in mind to ensure easy replacement when products/ signage change.
- Ensure your fixtures and signage do not cover more than 50% of the slated fixture wall surface.
    - — Sightlines through the slats drive customer engagement with presentations.

You will need details and dimensions in this guide on Partner Portal:

ESL Pricing



Last Updated August 12, 2026 8:20 AM | Best Buy partner and internal use only. Do not copy, publish, or distribute. The material in this document is confidential to Best Buy.

Next Steps

1 READ

the following from Partner Portal for details and dimensions **you will need**:

Architecture Standards | **ESL Pricing**

Additional useful guides:

Copy & Claims Guidelines | **Vendor Signage**

2 REQUEST

from your Best Buy contact:

- Drawings and models of parts you want to order. Provide the part numbers and specify Solidworks or STEP file type. **Best Buy provides the wall fixtures.*
- A list of preferred vendors who can manufacture the fixture parts.
- Examples of Best Buy-provided graphics, if desired.

Last Updated August 12, 2026 8:20 AM | Best Buy partner and internal use only. Do not copy, publish, or distribute. The material in this document is confidential to Best Buy.

Computer Monitor Tables

Monitor Table Overview

The Monitor Table Fixtures are intended to highlight the latest and greatest in monitor technology so products and graphics should showcase the vendor's top lineup.

Best Buy-Managed Components
- Core fixture elements
- Pricing ESLs

Vendor-Managed Components
- Any product featured as display or demo on the top wood surface
- Risers, security, data and power attachments needed for display or demo products on top wood surface
- Graphics for header, top panel(s) and front vertical lip.
- Printed logo Header

**Drawings and models of all parts available upon request.*



Last Updated August 12, 2026 8:20 AM | Best Buy partner and internal use only. Do not copy, publish, or distribute. The material in this document is confidential to Best Buy.

Monitor Table and End Cap Graphics

Requirements

- Header must follow template and material specifications exactly, and include only a white vendor logo (max 2.88” high) printed directly on the black substrate.
- Graphics on the panels should be visually uncluttered and not distract from the products on display
- Copy and logos are not permitted below the table surface.
- Additional graphics and educational touchpoints can be added, but use more than one 8.5x11 worth of table space per monitor.

Best Practices

- Highlight the latest and greatest in monitor technology with products and graphics to showcase the vendor’s top lineup.
- Ensure that information on the graphics is not blocked by the display product.
- Keep product education simple and brief.

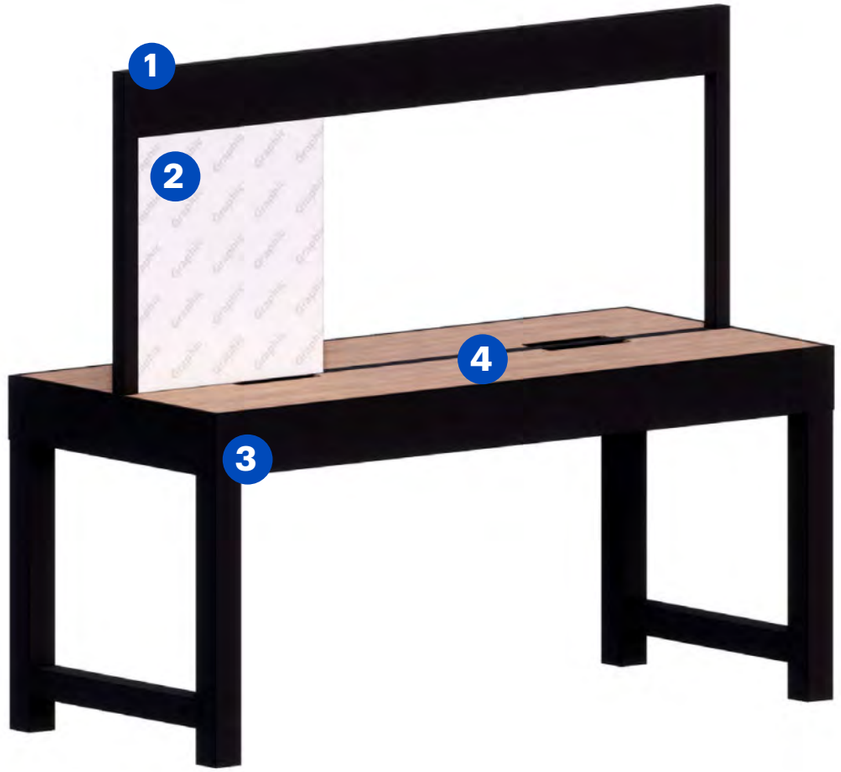

Monitor Table Fixture

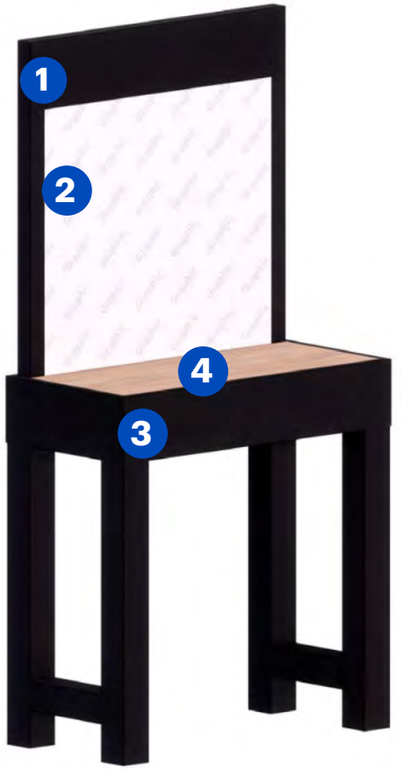

Monitor Table End Cap Fixture

Graphic Activation Areas

1. Header
2. Top Graphic Panel
3.Front Rail activation area
4. Top Wood Surface

Find more details and dimensions in these guides on Partner Portal:

Copy & Claims Guidelines

Last Updated August 12, 2026 8:20 AM | Best Buy partner and internal use only. Do not copy, publish, or distribute. The material in this document is confidential to Best Buy.

Monitor Table Graphics

Graphic Activation Areas

1. Table Header
Size: 91.6875x6
Substrate: 20mil Magnetic Vinyl, White

2. Table Graphic Panel
Size: 35.6875x34.313
Substrate: 6mm Sintra, Black
Finishing: apply 1” magnetic strip along bottom of back of graphic.

3. Front Rail Activation
Size: 95.625x6
Substrate: 20mil Magnetic Vinyl, White

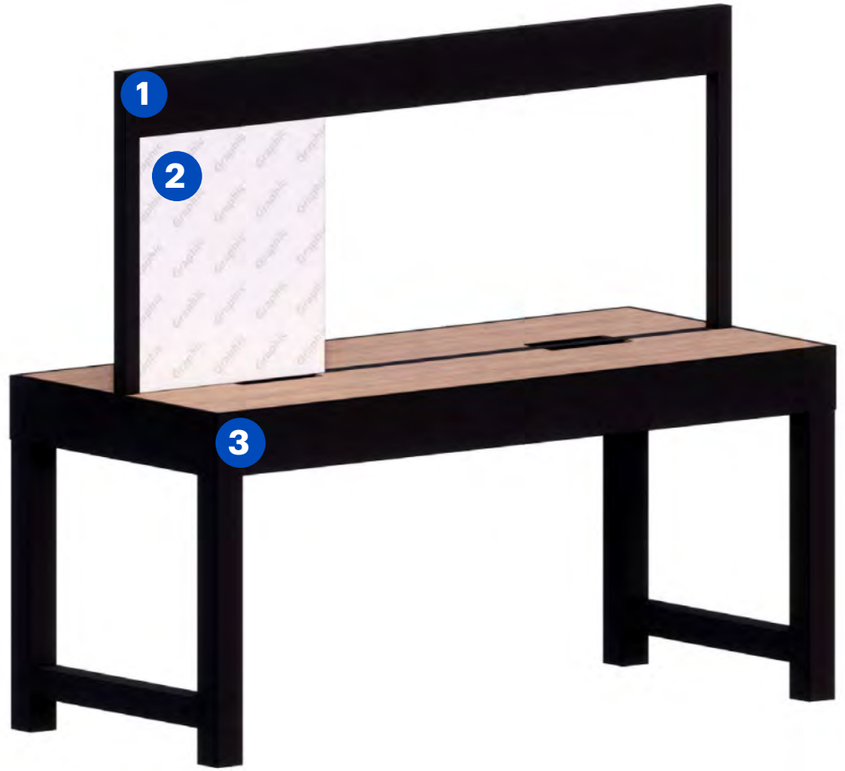

Monitor Table Fixture

Find more details and dimensions in these guides on Partner Portal:

Copy & Claims Guidelines

Last Updated August 12, 2026 8:20 AM | Best Buy partner and internal use only. Do not copy, publish, or distribute. The material in this document is confidential to Best Buy.

Monitor Table Graphics - End Cap

Graphic Activation Areas

1. End Cap Header
Size: 35.75x6
Substrate: 20mil Magnetic Vinyl, White

2. End Cap Graphic Panel
Size: 35.6875x34.313
Substrate: 6mm Sintra, Black
Finishing: apply 1” magnetic strip along bottom of back of graphic.

3. Front Rail Activation
Size: 41.75x6
Substrate: 20mil Magnetic Vinyl, White



Monitor Table End Cap Fixture

Find more details and dimensions in these guides on Partner Portal:

Copy & Claims Guidelines

Last Updated August 12, 2026 8:20 AM | Best Buy partner and internal use only. Do not copy, publish, or distribute. The material in this document is confidential to Best Buy.

Monitor Table and End Cap Merchandising

Requirements

- All presentations require Demo, Display or Dead Mock Display product(s) to be included
- All interactive elements must meet accessibility standards
- Products may not extend beyond the bounds of the fixture
- Ensure that the physical product is the hero of the display with graphics serving as a supporting story telling element that enhances the product experience rather than competing with it.
- Every display or salable SKU including boxstock needs a Fact Tag or Peg Label ESL.
- **Box stock should be front faced** where possible for A/B merchandising, but can be spined if the box has clearly legible product information on the side such as brand, size, model, and specs.

Best Practices

- The Monitor Table products and graphics should highlight the vendor's top lineup.
- Curate the total number of displayed SKUs and storytelling touchpoints.
- ESL on table top should be propped up using the Fact Tag ESL Table Assembly or similar. See ESL Attachment page for more detail.
- Fact Tag ESL should be center or right justified on the table top. Peg Label ESL should be centered for box stock product.



Last Updated August 12, 2026 8:20 AM | Best Buy partner and internal use only. Do not copy, publish, or distribute. The material in this document is confidential to Best Buy.

ESL Attachment Parts

Refer to the part numbers below when ordering any necessary components:

Fixture Component	Best Buy Part Number
Fact Tag ESL Table Assembly	1005396
Extrusion, Peg ESL Holder - Single Rail	1005394

Last Updated August 12, 2026 8:20 AM | Best Buy partner and internal use only. Do not copy, publish, or distribute. The material in this document is confidential to Best Buy.

Overall Dimensions - Monitor Table

*Dimensions are for reference only.
**Drawings and models of all parts available upon request.*

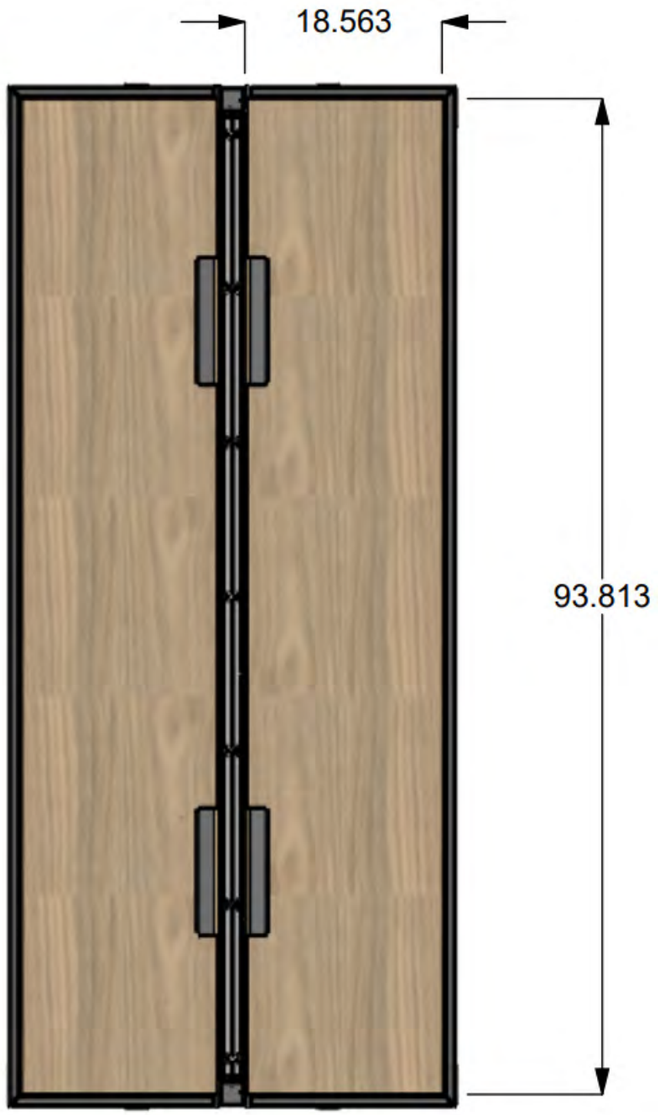

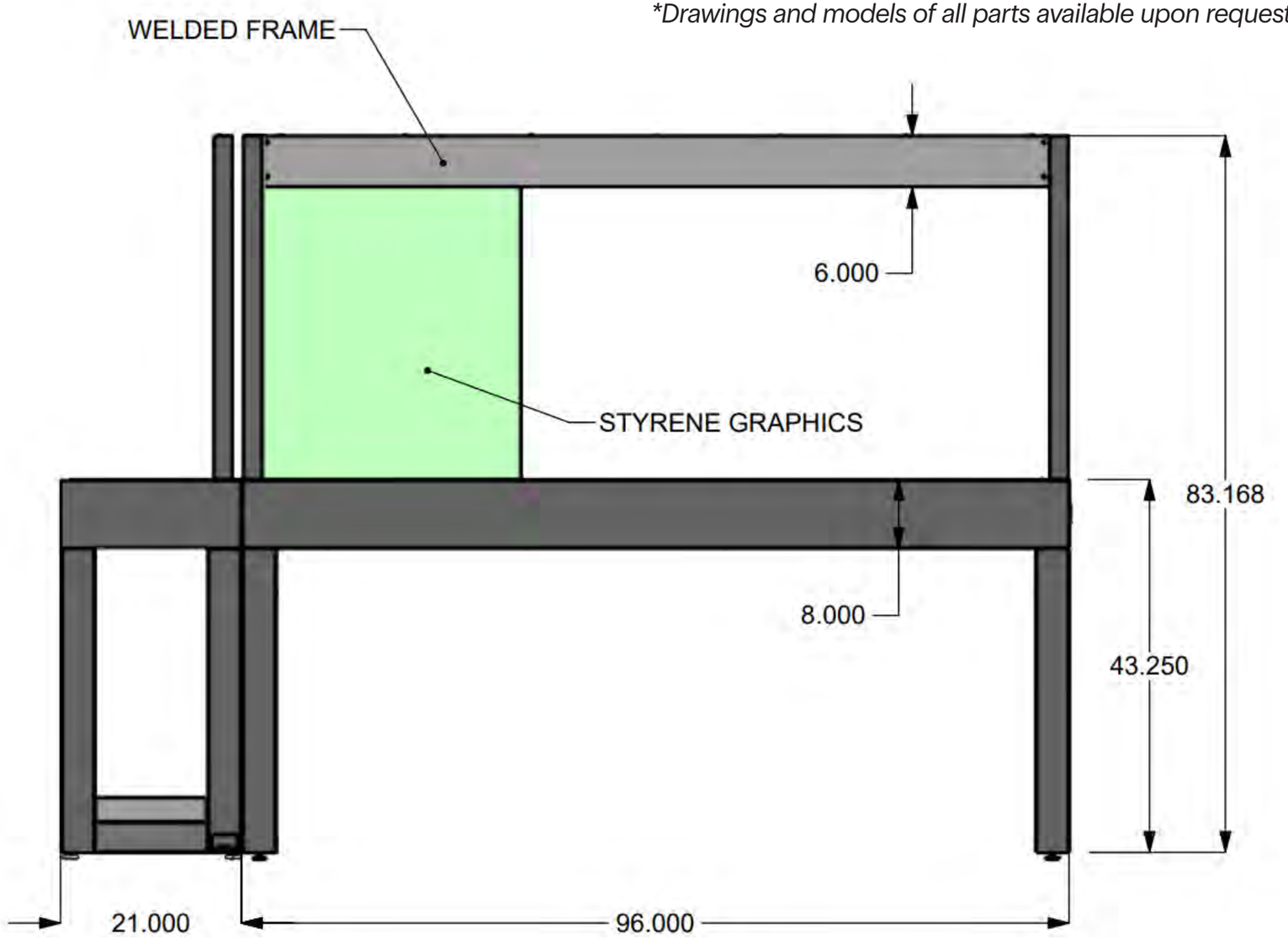

Last Updated August 12, 2026 8:20 AM | Best Buy partner and internal use only. Do not copy, publish, or distribute. The material in this document is confidential to Best Buy.

Overall Dimensions - Monitor Table End Cap

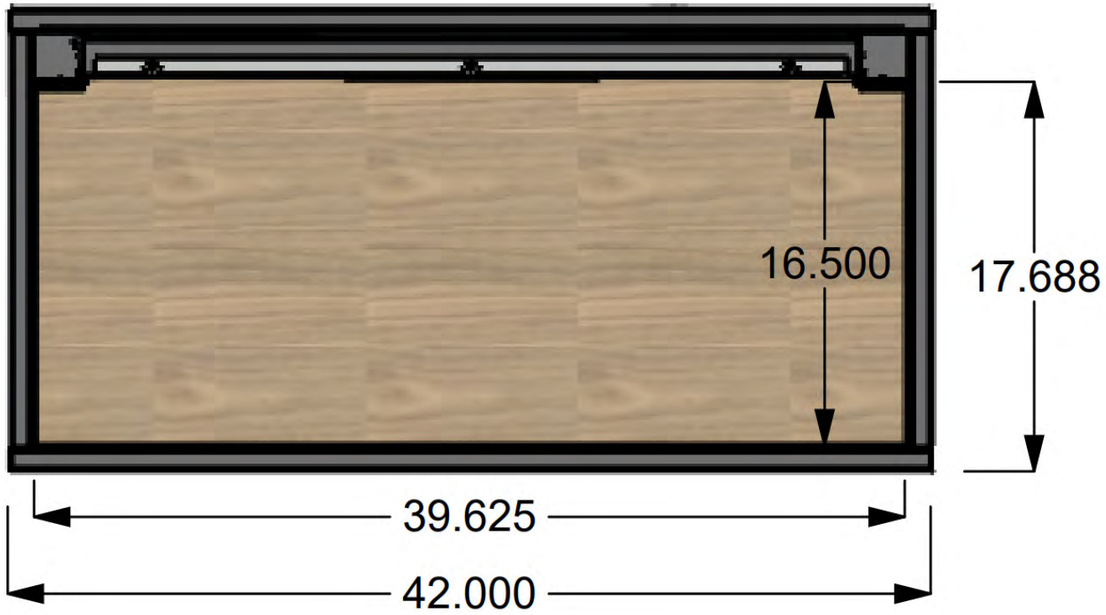

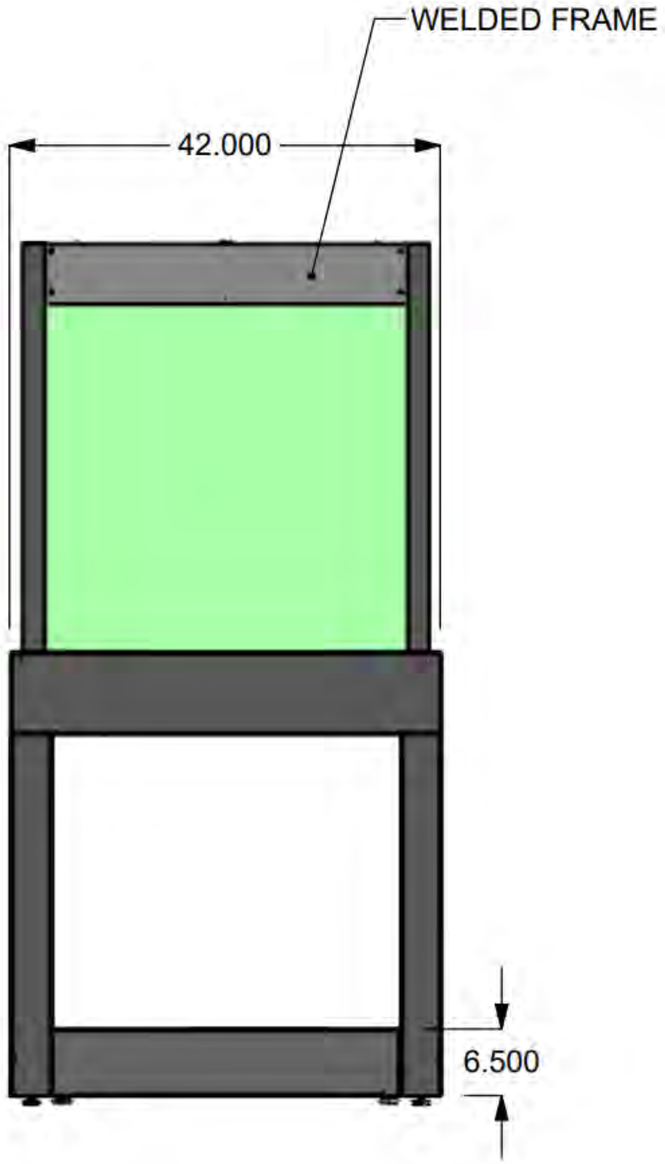

*Dimensions are for reference only.
Drawings and models of all parts available upon request.

Last Updated August 12, 2026 8:20 AM | Best Buy partner and internal use only. Do not copy, publish, or distribute. The material in this document is confidential to Best Buy.

Convergence Zone

Overview

Convergence Zones offer an opportunity to activate standalone vendor shops at key strike points on the race track.

Presentations are activated on either a **single wall fixture**, or **a full zone containing two wall fixtures and the 11’ x 11’ floor pad that surrounds them.**

Vendor Expectations

- For **single wall activation**, contain all fixtures and signage within the space of 96”W x 84”H x 10.5”D. ***Note:*** *Select circumstances may permit depth of up to 22” for displays.*
- For **full zone activation**, contain all fixtures and signage within the space of the 11’W x 11’D floor pad.
    - — If any fixture elements on the walls exceed 10.5” in depth, fins or a cane-detectable element is required.
- Ensure space and fixtures are ADA-compliant.
    - — GCA & IBC Code require aisles serving elements (“architectural components”) to be at least 48”W.

You will need details and dimensions in this guide on Partner Portal:

Architecture Standards

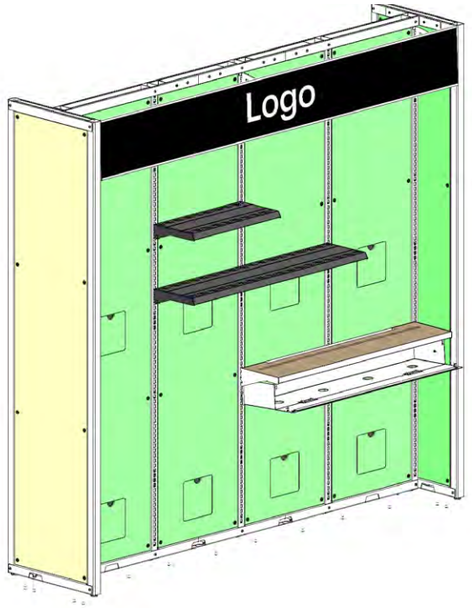

Single Wall Activation

Note: *Shelves shown for depth reference and can be used at vendor’s discretion. See “Next Steps” page for shelf part numbers.*

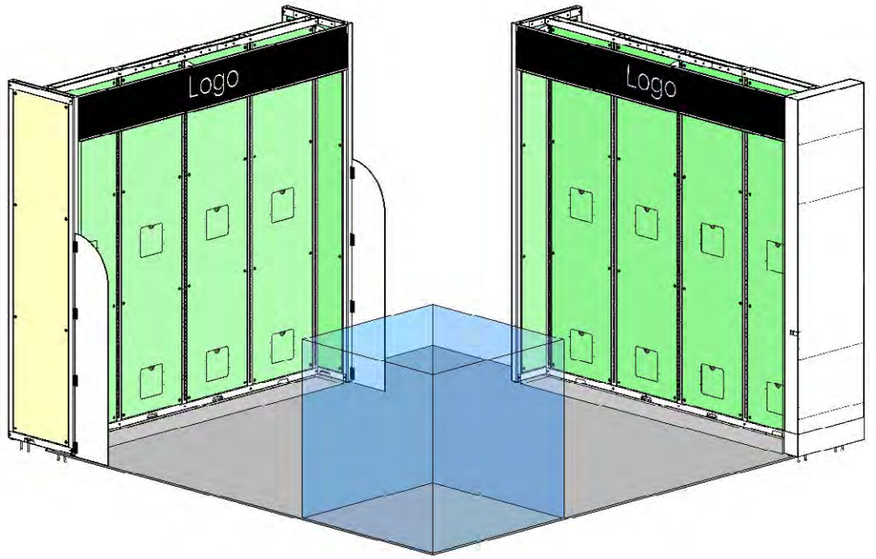

Full Zone Activation

Last Updated August 12, 2026 8:20 AM | Best Buy partner and internal use only. Do not copy, publish, or distribute. The material in this document is confidential to Best Buy.

Dimensions: Single Wall Activation

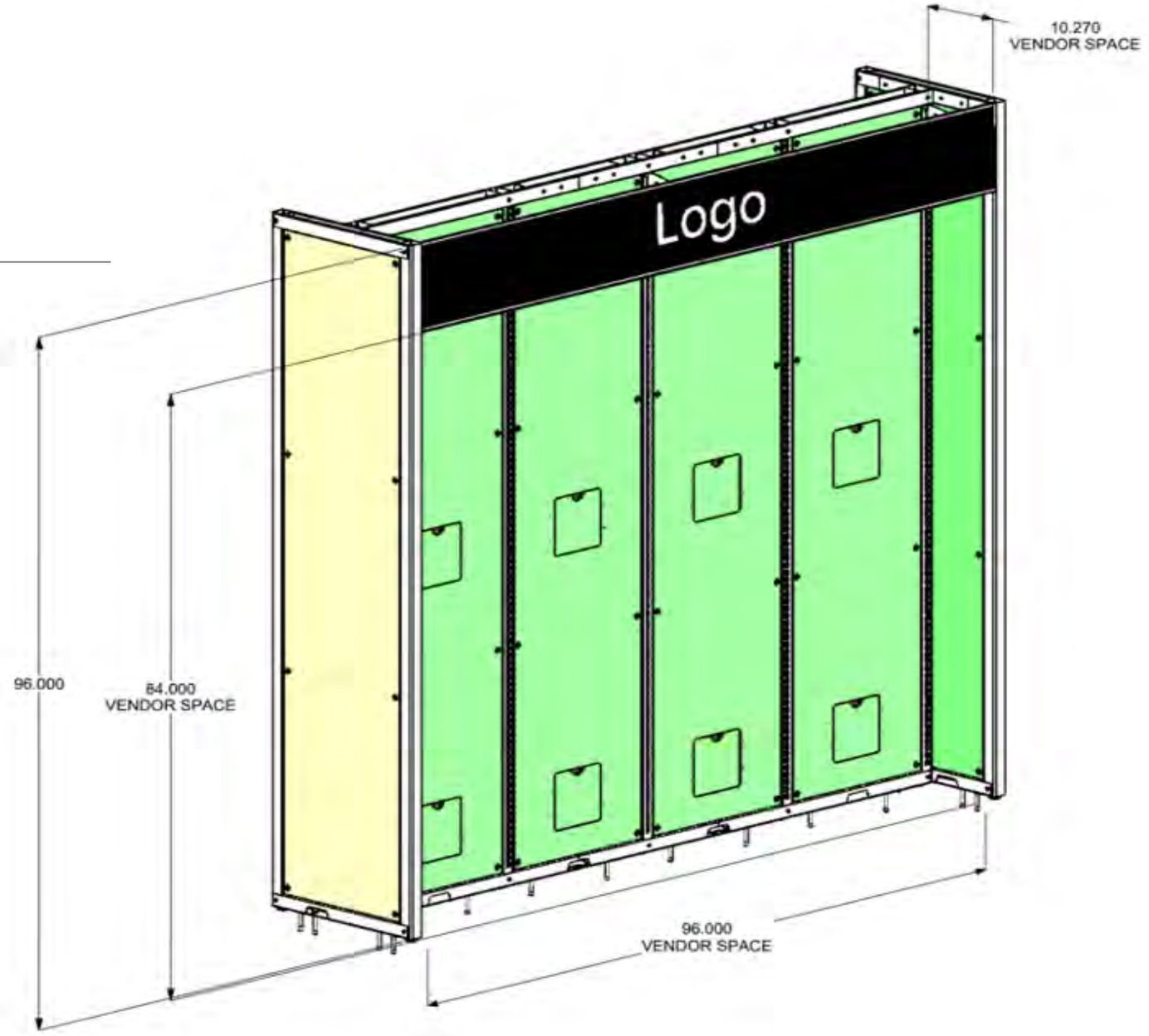

Last Updated August 12, 2026 8:20 AM | Best Buy partner and internal use only. Do not copy, publish, or distribute. The material in this document is confidential to Best Buy.

Dimensions: Full Zone Activation

Vendor Expectations

- Ensure island fixtures are ADA-compliant.
  - GCA & IBC Code require aisles serving elements (“architectural components”) to be at least 48”W.

Note: *Drawings and models of all parts and overall space dimensions available upon request. Connect with your Best Buy contact for more details.*

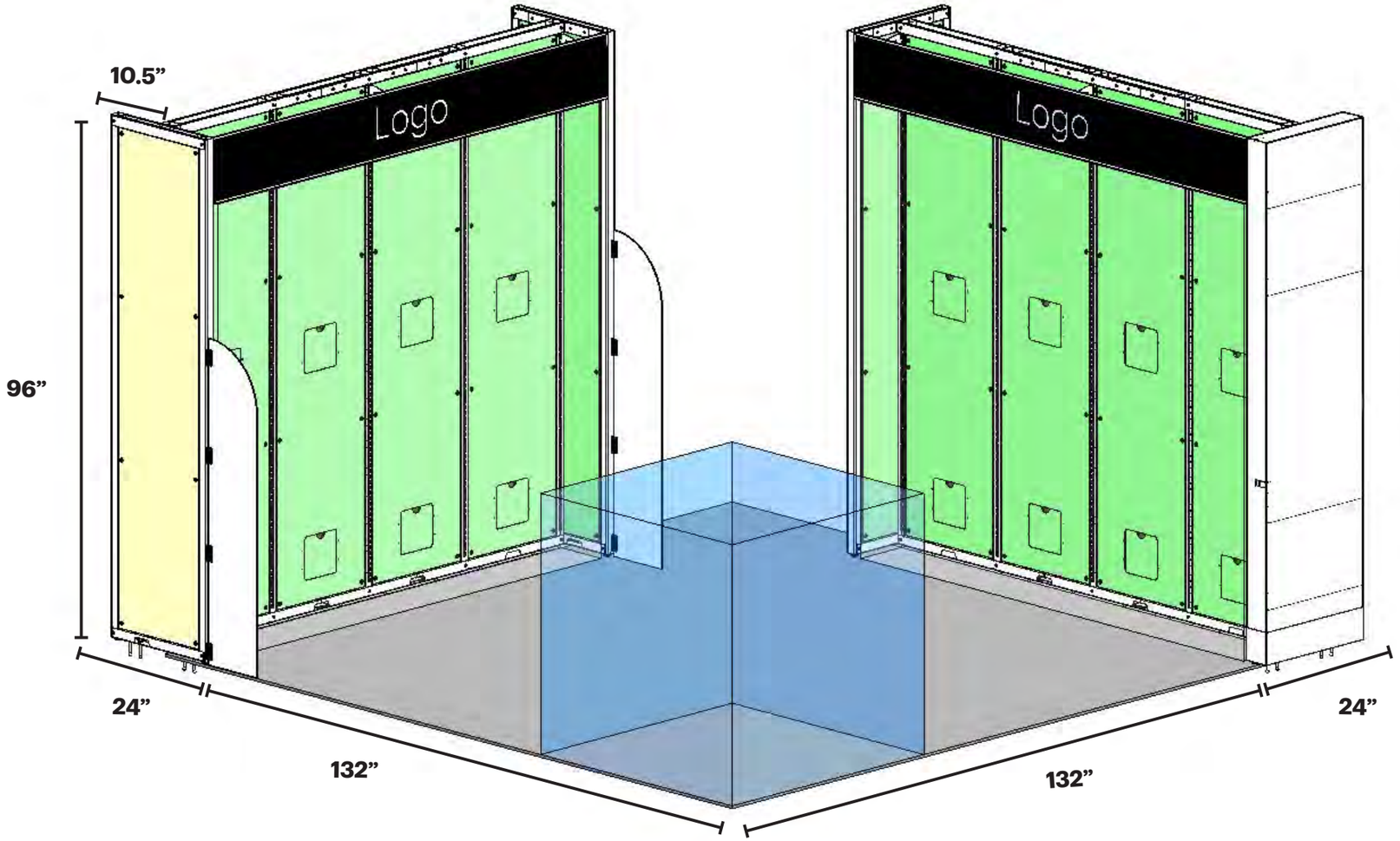

Last Updated August 12, 2026 8:20 AM | Best Buy partner and internal use only. Do not copy, publish, or distribute. The material in this document is confidential to Best Buy.

Structural Support and Anchoring

Each Convergence Zone wall has a maximum in-service total weight of 560 pounds. The total hanging load for each 8’ fixture wall side cannot exceed 216 pounds.

Vendor Expectations

- Determine if free-standing fixture tipping is a concern and if ballasts, bracing or anchoring is needed.
    - — Minimum overturning factor of safety (FS) is 1.5 if minimum FS cannot be achieved through self weight alone.
- If using ballasts, distribute equally in the bottom of tip-prone fixtures.
- If using anchors and placing your fixture in the same location as previous fixture, refer to legacy anchor patterns to meet the minimum requirement of 4” of separation from previous anchor points.

Note: *A structural review is required to ensure correct placement, weight distribution and attachment method.*

Last Updated August 12, 2026 8:20 AM | Best Buy partner and internal use only. Do not copy, publish, or distribute. The material in this document is confidential to Best Buy.

Power

Each fixture wall contains 2 duplex receptacles that provide continuous (24/7) power and 2 duplex receptacles that provide controlled (EMS) power on a 20-amp circuit to each side of the wall, evenly spaced along the wall segment.

Fixtures, signage and presentation elements located away from the walls cannot be powered.

Receptacles are mounted on the fixture wall uprights with continuous power located 3” above the bottom cutout and controlled power mounted 3” below the top knockout.

Panels are removable to access the void that contains electronics and wiring.

Electrical Detail

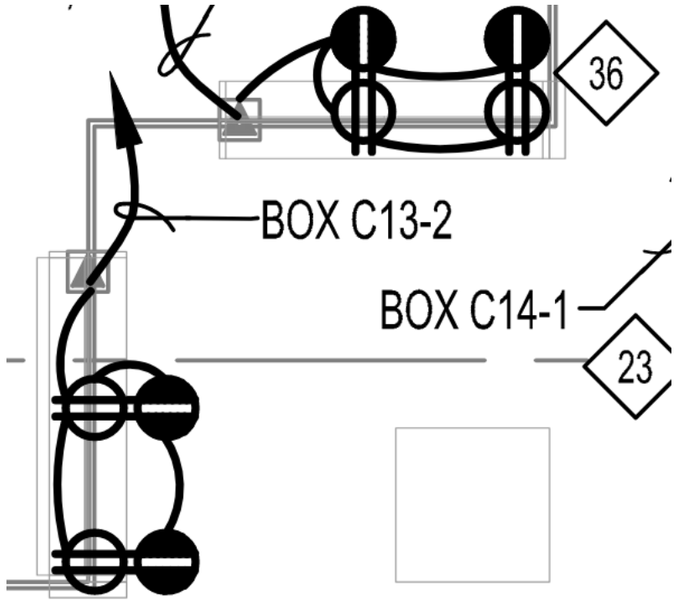



Duplex Receptacles

Note: *Controlled power mounted 3” below top knockout and continuous power 3” above bottom knockout.*

Last Updated August 12, 2026 8:20 AM | Best Buy partner and internal use only. Do not copy, publish, or distribute. The material in this document is confidential to Best Buy.

Graphics

Vendor Expectations

- Produce one branded header per wall fixture in your stage.
  - — **Size:** 98.38”W x 12”H
  - — **Substrates:**

    Header backer: Alpolic PE and finish: BLX Black

    Header logo: Applied diecut vinyl white

    Illuminated logo (optional): Letters white or Standard translucent letter/logo finish: White Light, White Optics 009 Matte.
  - — Logo must be centered and have a max height of 4.75”
- Create additional graphics as desired.
  - — SEG (standard or backlit) is the preferred substrate for large format graphics. SEGs must be attached by hooking into framework uprights.
  - — If covering a wall with magnetic graphics, they must be produced in multiple sheets or diecut around slots.
  - — Copy must be kept a minimum of 36” above the floor. ***Note:*** *Floor graphics are not permitted.*

Best Practices

- Ensure the product serves as the hero of the presentation; all signage and collateral should act in support.
- Beyond the branded headers, use vendor logos sparingly.
- Feature each signage element at its most impactful moment of the customer’s journey. (i.e. Copy-heavy signage should fall after a customer’s engagement with the product.)

REQUIRED GRAPHIC

Branded Header



Note: *Partner with designated project management for drawings of illumination header fixture*

Last Updated August 12, 2026 8:20 AM | Best Buy partner and internal use only. Do not copy, publish, or distribute. The material in this document is confidential to Best Buy.

Merchandising

Vendor Expectations

- For **single wall activation**, contain all fixtures and signage within the space of 96”W x 84”H x 10.5”D. ***Note:*** *Select circumstances may permit depth of up to 22” for displays.*
- For **full zone activation**, contain all fixtures and signage within the space of the 11’W x 11’D floor pad.
- Do not extend above the fixture wall height.
- Do not cover or obscure horizontal header.
- Uprights are 24” on center.
- Include your choice of Demo, Display or Dead Mock Display product(s).
  - — **Demo:** An out-of-box product feature that allows for an interactive experience.
  - — **Display:** A non-interactive product included to showcase materiality, form factor, colorways and sizing.
  - — **Dead Mock Display:** A non-interactive 3D model of salable product intended to showcase form factor, colorways and sizing.
- Ensure all demo experiences are ADA-compliant.

You will need details and dimensions in this guide on Partner Portal:

Architecture Standards



Last Updated August 12, 2026 8:20 AM | Best Buy partner and internal use only. Do not copy, publish, or distribute. The material in this document is confidential to Best Buy.

Merchandising

Vendor Expectations

- Activate required side fins on any wall fixture shelves that are greater than 10.5”D.
  - — No fins are needed if cane-detectable fixture or element is added below shelf.
- Use permitted forms of lighting only. No backlighting, downlighting or under-cabinet lighting is allowed.
- Ensure product is the hero of the presentation. Do not crowd with graphics or copy.
- Support all products, display or salable, with a proximally located electronic shelf label (ESL).
- Design your display components with modularity in mind to ensure easy replacement when products/ signage change.

Best Practices

- Design wall fixture elements and freestanding fixtures in 48”W sections to allow greater cross-compatibility among COS Brand Zone, Convergence Zone and Gondola fixtures.
- Leverage the uprights when attaching merchandise-supporting shelves and wall elements.

You will need details and dimensions in this guide on Partner Portal:

ESL Pricing



Last Updated August 12, 2026 8:20 AM | Best Buy partner and internal use only. Do not copy, publish, or distribute. The material in this document is confidential to Best Buy.

Full Zone-specific Merchandising

Vendor Expectations

- Design island fixture with max. dimensions of 48”W x 48”H x 48”D.
- Place island in the far corner of the zone’s floor pad.

Note: *If program will transition to COS Brand Zone fixture in the future, use max. dimensions of 36”W x 48”H x 36”D for island.*

You will need details and dimensions in this guide on Partner Portal:

Architecture Standards



Last Updated August 12, 2026 8:20 AM | Best Buy partner and internal use only. Do not copy, publish, or distribute. The material in this document is confidential to Best Buy.

Next Steps

1 READ

the following from Partner Portal for details and dimensions **you will need**:

Architecture Standards | **ESL Pricing**

Additional useful guides:

Copy & Claims Guidelines | **Vendor Signage**

2 REQUEST

from your Best Buy contact:

- Drawings and models of parts you want to order. Provide the part numbers and specify Solidworks or STEP file type.
- A list of preferred vendors who can manufacture the fixture parts.
- Examples of Best Buy-provided graphics, if desired.

Fixture Component	Best Buy Part #
8’ Convergence Wall	1010346
Convergence Wall Header	1014094
12” x 48” Standard Shelf	1014797
14” x 48” Standard Shelf	1012248
18” x 48” Standard Shelf	1012249
22” x 48” Standard Shelf	1012251
12” x 24” Standard Shelf	1017788
14” x 24” Standard Shelf	1012247

Fixture Component	Best Buy Part #
18” x 24” Standard Shelf	1012250
22” x 24” Standard Shelf	1012252
10.5” x 48” Adjustable Shelf Matte Black	1016891
12” x 24” Adjustable Shelf Matte Black	1017727
24” Merch Bar Black	1010635
12” Peghook (Wire Grid & Merch Bar) Black	1010643
4” Peghook (Wire Grid & Merch Bar) Black	1010717

Last Updated August 12, 2026 8:20 AM | Best Buy partner and internal use only. Do not copy, publish, or distribute. The material in this document is confidential to Best Buy.

Copy & Claims

Overview

The copy and claims you use to promote your products should be meaningful and relevant. To put your best foot forward and optimize your presentation:

- Use concise language without technical terms and industry jargon
- Feature the benefits that matter most to customers
- Write in brief bullets rather than long paragraphs

Vendor Expectations

- Body copy minimum: 9.5 pt
- Legal copy minimum: 7.5 pt
- Keep all copy a minimum of 36” above the floor.

  Note: *Floor graphics are not permitted.*

Best Practices

- If the height of your presentation allows, display taglines and logos above 60”H.



Approved copy examples

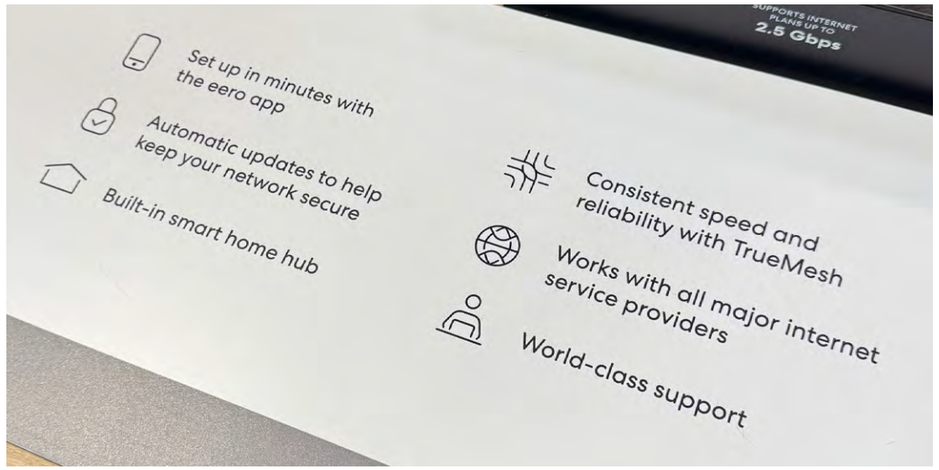

Last Updated August 12, 2026 8:20 AM | Best Buy partner and internal use only. Do not copy, publish, or distribute. The material in this document is confidential to Best Buy.

Copy

Permitted

General product information.
This includes succinct statements that are meaningful and relevant to customers as they learn about and compare products.

Award mentions.
Award copy may be approved with prior substantiation and indemnification as long as it **does not** include award logos, graphics or icons. Alternatively, it may be more effective to focus instead on highlighting the hero characteristics that helped your product earn the award.

Permitted with Limits

“Coming soon” notices.
These require immediate updates following a product launch. They are reserved exclusively for time-sensitive categories. Consider instead a “pre-order” message if products can be ordered in advance.

“New” callouts.
Per Best Buy standards, a product must be in the retail market fewer than 6 months to claim it is new. After this, “new” is deceptive and inaccurate. For this reason, “new” statements are not permitted in applications where they cannot be easily removed. Consider instead highlighting unique product qualities rather than product newness to stand apart from the competition.

Last Updated August 12, 2026 8:20 AM | Best Buy partner and internal use only. Do not copy, publish, or distribute. The material in this document is confidential to Best Buy.

Claims

Permitted

Singularity statements.
With prior substantiation and indemnification, brands may indicate that a product of theirs is the "only" one of its kind within their own brand (not among other brands).

Example:
(*Vendor*)'s only automated dryer loader.

Permitted with Limits

Vague superlatives.
"Puffery" that indicates your product or brand is the greatest in the galaxy, is the pinnacle of technology, will turn you into a chef, etc., is generic. Although it is permitted without substantiation, it is less valuable to the customer than specific product highlights and should be used sparingly, if at all.

Example:
The pinnacle of gaming technology.

Recommended alternative:
(*Vendor*)'s top spec'd gaming hardware.

Note: *Best Buy discourages the use of unnecessary puffery and superlative claims as they add visual noise and can quickly become outdated. They must be substantiated, clear, detailed and attributed within the collateral on which they appear. All claims must be active up to and beyond their submission date, lasting 6+ months into the future.*

Not Permitted

Comparative claims.
Comparing yourself to others is not permitted in our stores and creates hostility among Best Buy's featured vendors.

Example:
22x faster than other leading brands.

Last Updated August 12, 2026 8:20 AM | Best Buy partner and internal use only. Do not copy, publish, or distribute. The material in this document is confidential to Best Buy.

Display-Centric Basecase Graphic Insert

Fixture Variations

The Display-Centric Base Case system is the new approved solution for physically displaying shrink-sensitive salable product beneath demos and displays on Lowbay Gondolas

Fixture Design Intent and Modularity

- The Display-Centric Base Case was designed as a component kit of parts.
  - These parts are intended for use on Standard Lowbay Gondolas and Skinny Lowbay Gondolas.
- Extra attachment channels and A/V pass throughs have been added to the Locking Cases that allow for product presentations and VPPs to be secured directly to the top of the fixture
- Enhanced security and shrink-minimization considerations were factored into the design of the fixture
- Channels are built into the top and bottom of the locking cases that can receive Graphic Inserts
  - These inserts can visually obscure the locking case when no salable stock is present, there is an elevated shrink risk, or if a vendor wants to increase their graphic presence on the fixture
- Demo/Display-Centric Base Cases can be merchandised side-by-side with existing, older locking case designs

Display-Centric Base Case



Standard Lowbay Gondola



Skinny Lowbay Gondola

Display-Centric Base Case: Graphic Inserts Activated



Standard Lowbay Gondola



Skinny Lowbay Gondola

Last Updated August 12, 2026 8:20 AM | Best Buy partner and internal use only. Do not copy, publish, or distribute. The material in this document is confidential to Best Buy.

Graphic Insert Considerations

The Display-Centric Base Case system is the new approved solution for physically displaying shrink-sensitive salable product beneath demos and displays on Lowbay Gondolas

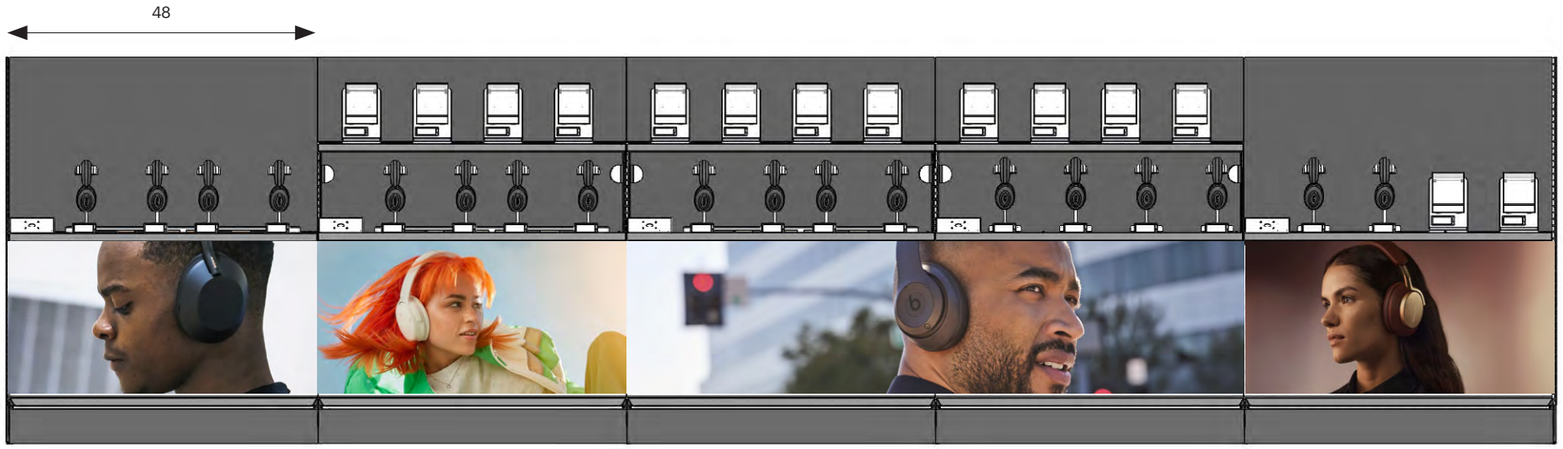

Graphic Insert Guardrails

- Vendors can activate their brand on the Graphic Inserts through the use of lifestyle imagery
  - Inserts must feature photography that features humans interacting with products in an lifestyle environment
  - Crop of the image should allow for the products to be clearly visible within the image
  - Figures and product should be largely centered in the crop

  Note: *Copy on the base case graphic is not permitted. Ensure that all copy within other activable areas follows the guidelines.*
- Inserts are produced in 47.98” wide sections
  - Vendors can bleed a single image across multiple Graphic Insert segments if they are all managed/ operated by a single party
- Graphic Insert dimensions are 47.98” W x 23.75” H
  - Material is .1875 Ultraboard, white

Last Updated August 12, 2026 8:20 AM | Best Buy partner and internal use only. Do not copy, publish, or distribute. The material in this document is confidential to Best Buy.

Graphic Insert Alternatives

The Display-Centric Base Case system is the new approved solution for physically displaying shrink-sensitive salable product beneath demos and displays on Lowbay Gondolas

Graphic Insert Guardrails

- If lifestyle imagery featuring humans isn't available or allowed, other options include:
  - Featuring images of products in lifestyle environments ***without*** the inclusion of humans
  - Priority three features product imagery on a neutral color field

Note: *Copy on the base case graphic is not permitted. Ensure that all copy within other activable areas follows the guidelines.*

Find more details and dimensions in these guides on Partner Portal:

QR Code Guidelines

Copy & Claims Guidelines

Priority One:
Lifestyle imagery featuring humans and products in environment

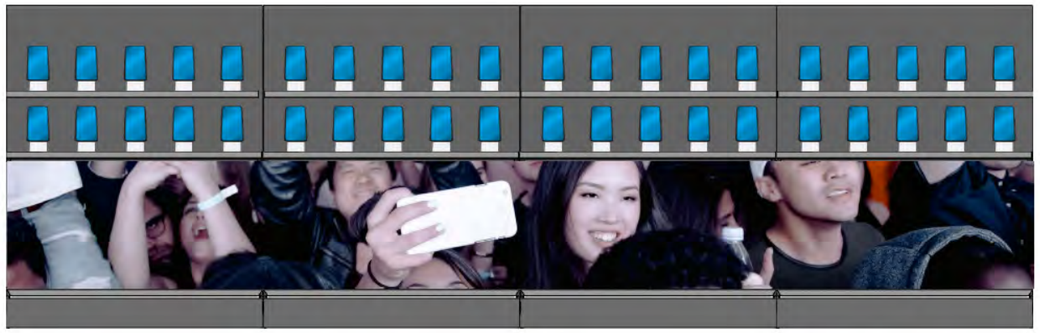

Priority Two:
Lifestyle imagery featuring products in environment

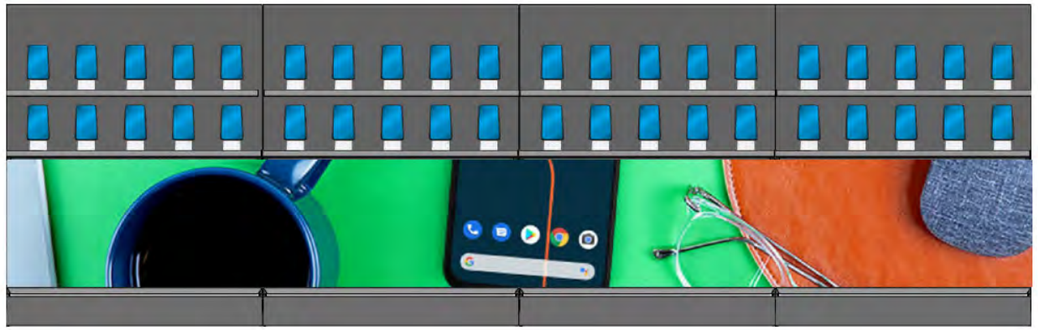

Priority Three:
Product imagery on a neutral color field



Last Updated August 12, 2026 8:20 AM | Best Buy partner and internal use only. Do not copy, publish, or distribute. The material in this document is confidential to Best Buy.

Drone Case

Fixture Overview

Our drones case offers a consistent and secure means of presenting your product. It contains both Best Buy-managed and vendor-managed parts.

Best Buy-managed:

- Acrylic case
- Product card
- QR code cling
- Backer graphic

Vendor-managed:

- Display or deadmock display product
- Security post

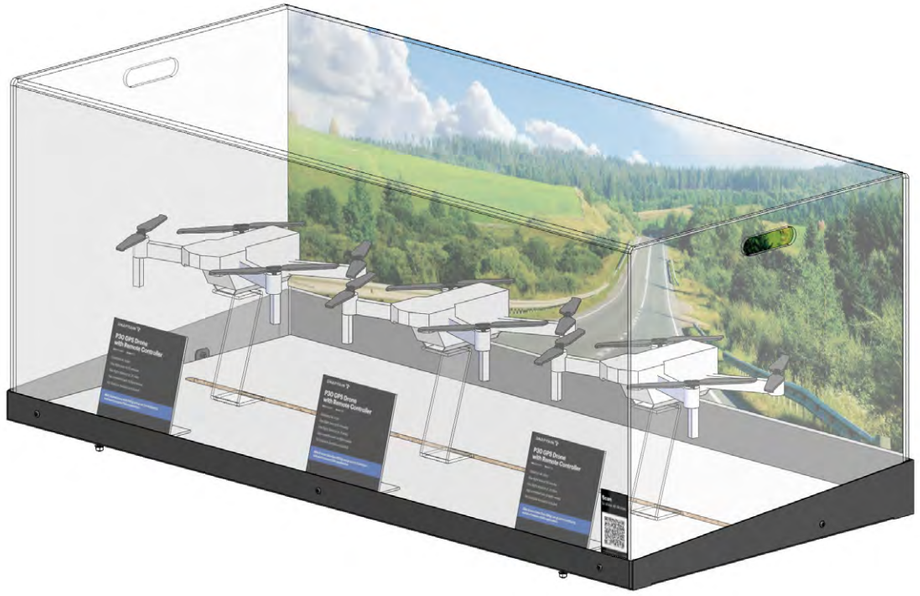

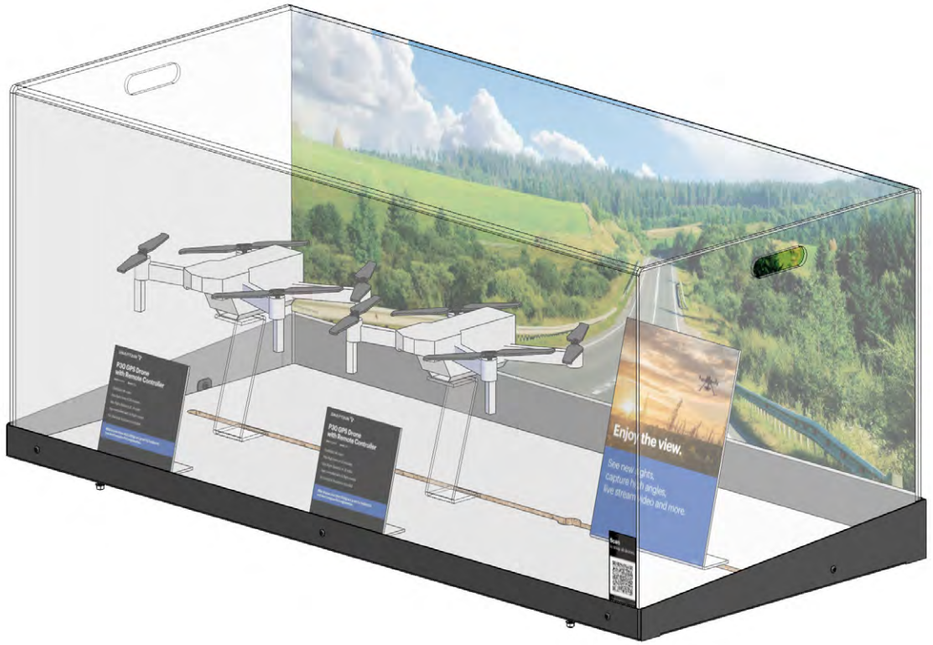

Last Updated August 12, 2026 8:20 AM | Best Buy partner and internal use only. Do not copy, publish, or distribute. The material in this document is confidential to Best Buy.

Fixture Dimensions

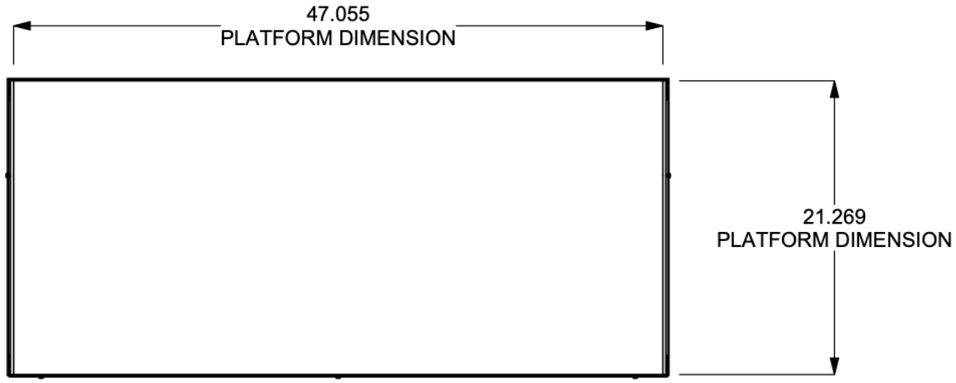

Last Updated August 12, 2026 8:20 AM | Best Buy partner and internal use only. Do not copy, publish, or distribute. The material in this document is confidential to Best Buy.

Graphics Overview



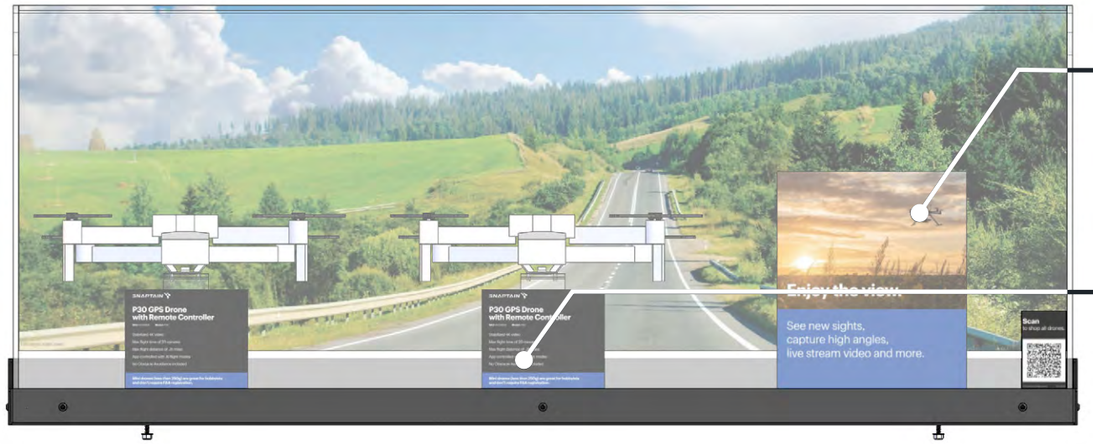

Last Updated August 12, 2026 8:20 AM | Best Buy partner and internal use only. Do not copy, publish, or distribute. The material in this document is confidential to Best Buy.

Graphics Details

Backer Graphic

Size: 47”W x 17.975”H
Substrate: .010 Styrene, White (or) 24pt C1S, White
Colors: CMYK



Last Updated August 12, 2026 8:20 AM | Best Buy partner and internal use only. Do not copy, publish, or distribute. The material in this document is confidential to Best Buy.

Graphics Details

Product Cards and QR Code Cling

- Product cards should be justified to the front left of the corresponding product. All cards should be front-aligned and orderly.
- The QR code cling should be placed in the lower righthand corner on the exterior of the display case.

You will need details found in this guide on Partner Portal:

Copy & Claims Guidelines

Product Cards

Size: 5.5”Wx7.25”H (flat); 5.5”W x 5.5”H (finished)
Substrate: 3mm Sintra, White
Colors: K, BBYHumanBlue (or) K, BBYTechWhite
Finishing: Heat bend back 105 degrees, 5.5” from top.
Apply 1 strip of Remo1 tape to bottom of foot.

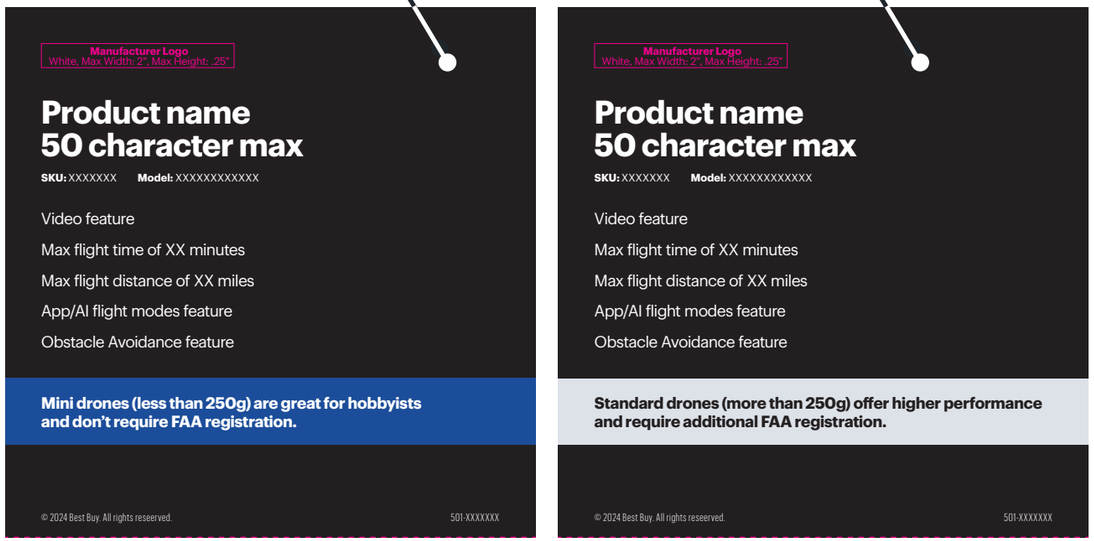

QR Code Cling

Size: 2.5”W x 3.75”H
Substrate: 9mil Neenah Stick-R
Removable Textured Wallpaper Paper
Colors: K



Last Updated August 12, 2026 8:20 AM | Best Buy partner and internal use only. Do not copy, publish, or distribute. The material in this document is confidential to Best Buy.

Graphics Details

Drones Filler Graphic

- When the product is not available for display, deploy the alternative Drones Filler Graphic.
- Ensure the graphic is neatly placed in the space created by the absent drone. The graphic should be completely parallel to the front of the drone case.

Drones Filler Graphic

Size: 8.5”W x 11”H
Substrate: 12pt C1S, White
Colors: CMYK, BBYHumanBlue

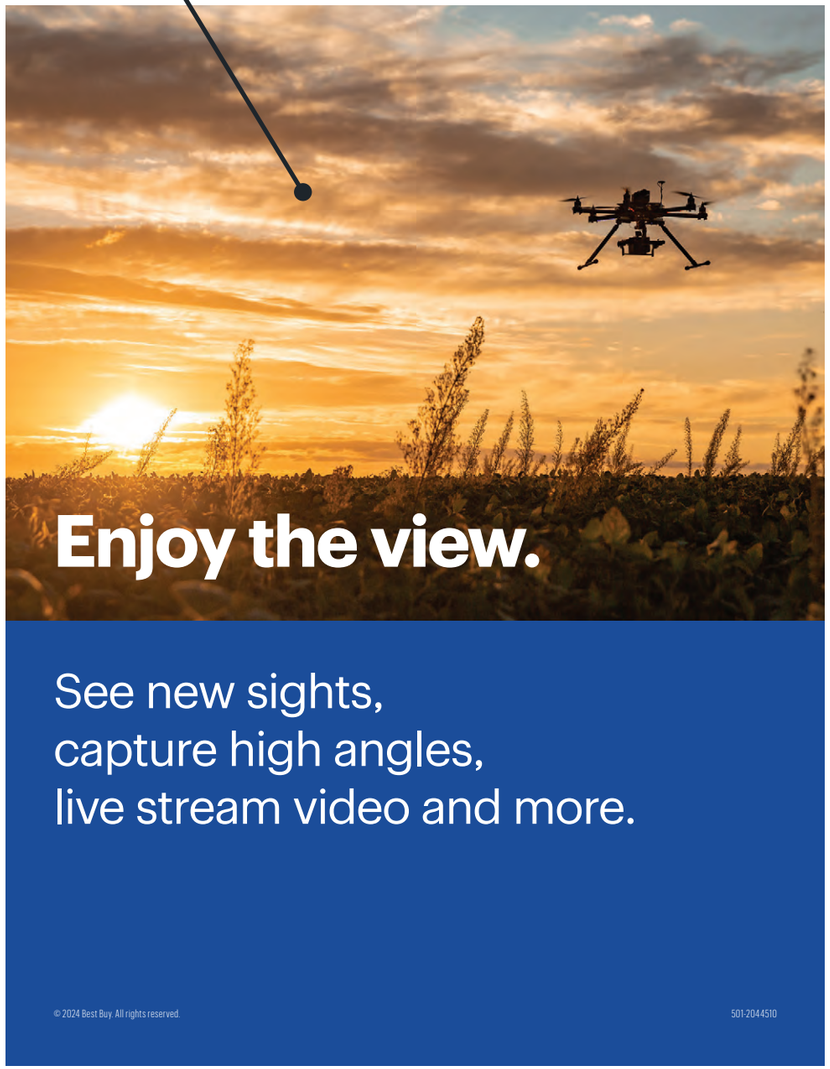

Last Updated August 12, 2026 8:20 AM | Best Buy partner and internal use only. Do not copy, publish, or distribute. The material in this document is confidential to Best Buy.

Attachments

All display drones must be secured to the presentation using a Best Buy-designed drone stand.

Vendor Expectations

- Utilize one drone stand for each drone on display.
- Space your drone stands appropriately, with equal spacing on either side of the central drone position.
- Ensure that the drones are securely attached to the drone stand to maximize stability.

**Drawings and models of all parts available upon request.*

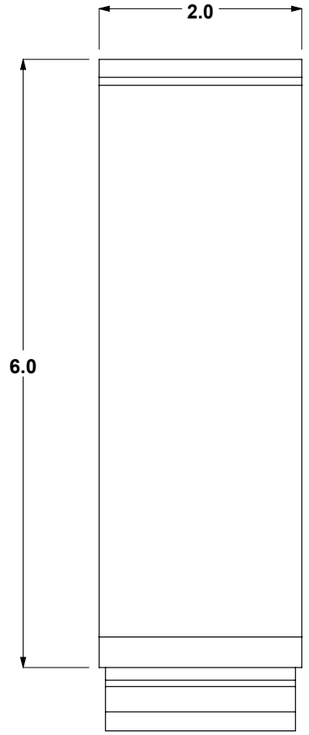

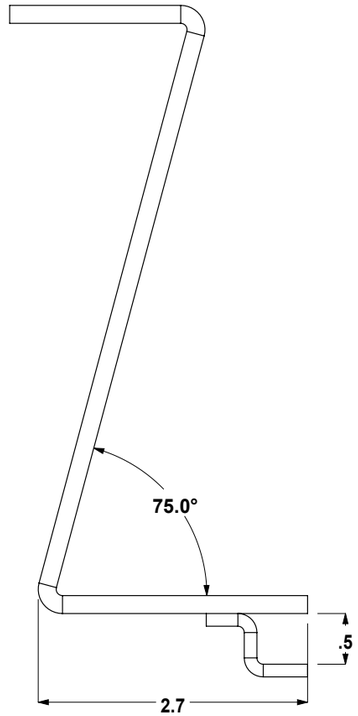

Substrate: Clear Acrylic or Engineering Equivalent

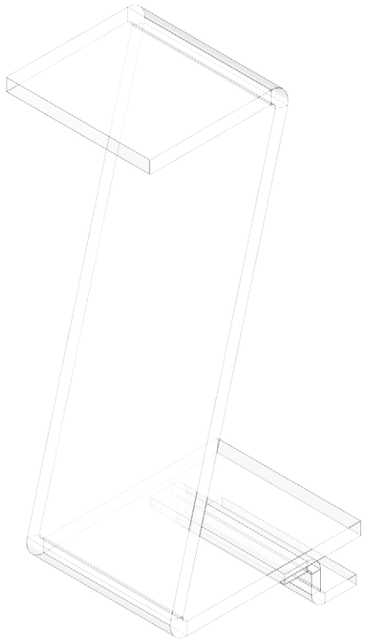

Last Updated August 12, 2026 8:20 AM | Best Buy partner and internal use only. Do not copy, publish, or distribute. The material in this document is confidential to Best Buy.

Merchandising

Placement Expectations

- Space drones with equal room on either side of the central drone position.
- Justify product cards to the front left of the related product. All cards should be front-aligned and orderly.
- Center ESL directly below the product.

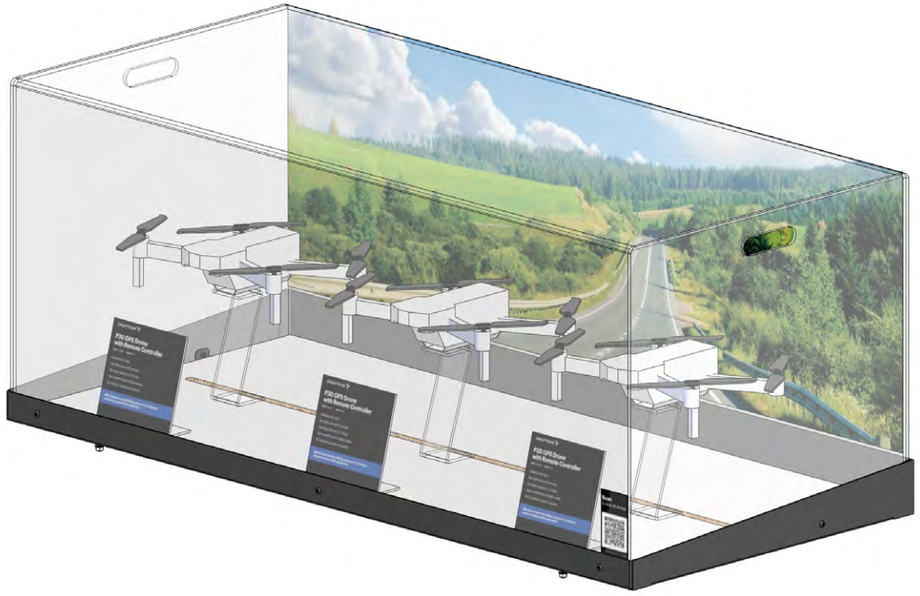

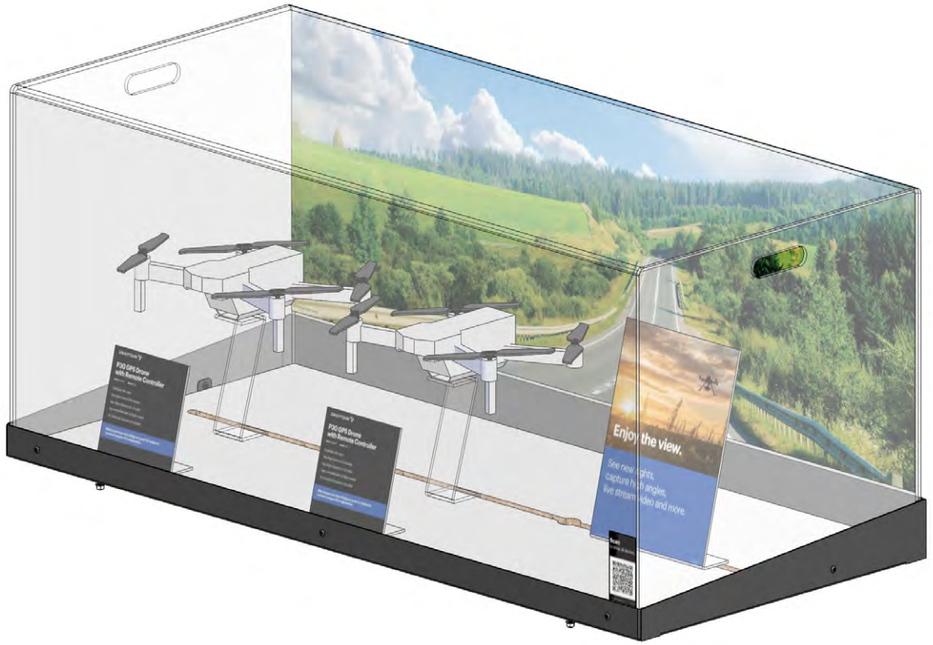

Last Updated August 12, 2026 8:20 AM | Best Buy partner and internal use only. Do not copy, publish, or distribute. The material in this document is confidential to Best Buy.

Next Steps

1 READ

the following from Partner Portal for details and dimensions **you will need**:

Copy & Claims Guidelines

Additional useful guides:

Lowbay Gondola Guidelines

2 REQUEST

from your Best Buy contact:

- Drawings and models of parts you want to order. Provide the part numbers and specify Solidworks or STEP file type. **Best Buy provides acrylic case, product cards, QR code cling and backer graphic.*
- A list of preferred vendors who can manufacture the fixture parts.
- Examples of Best Buy-provided graphics, if desired.

Fixture Component	Best Buy Part Number
Drone Stand	1025318
Weldment, 4’ Drone Case	1024066
ASM, Display Cover — 4’ Drone Display	1024061
Nut, #10-24, Nylon Locking	1000027
Washer, .218” ID x .500 OD x .06” THK, Flat	1000029
Screw, #10-24 x .75 LG, Tamper-Resistant, Button	1024058
Base — 4’ Drone Display	1024071

Last Updated August 12, 2026 8:20 AM | Best Buy partner and internal use only. Do not copy, publish, or distribute. The material in this document is confidential to Best Buy.

ESL Store Pricing

Overview

Electronic Shelf Labels (ESLs) serve our customers and retail employees by displaying prices through technology and efficiency. They come in two sizes:

- **Peg Label ESL** — 3.58”W x 1.61”H
- **Fact Tag ESL** — 5.87”W x 4.69”H

> ***Note:*** *A larger Mass Display ESL also exists in stores but is being phased out and is no longer available.*

To ensure consistent pricing across all products and all store locations, **ESLs are Best Buy’s only approved product pricing solution**.

**Drawings and models of all parts available upon request.*



Peg Label ESL



Fact Tag ESL

Last Updated August 12, 2026 8:20 AM | Best Buy partner and internal use only. Do not copy, publish, or distribute. The material in this document is confidential to Best Buy.

Dimensions

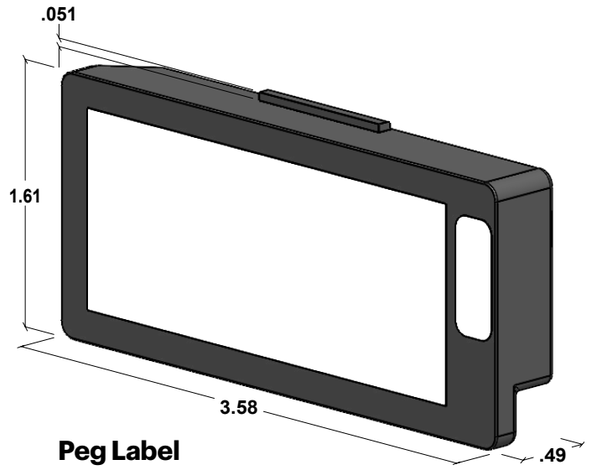

Peg Label
ESL

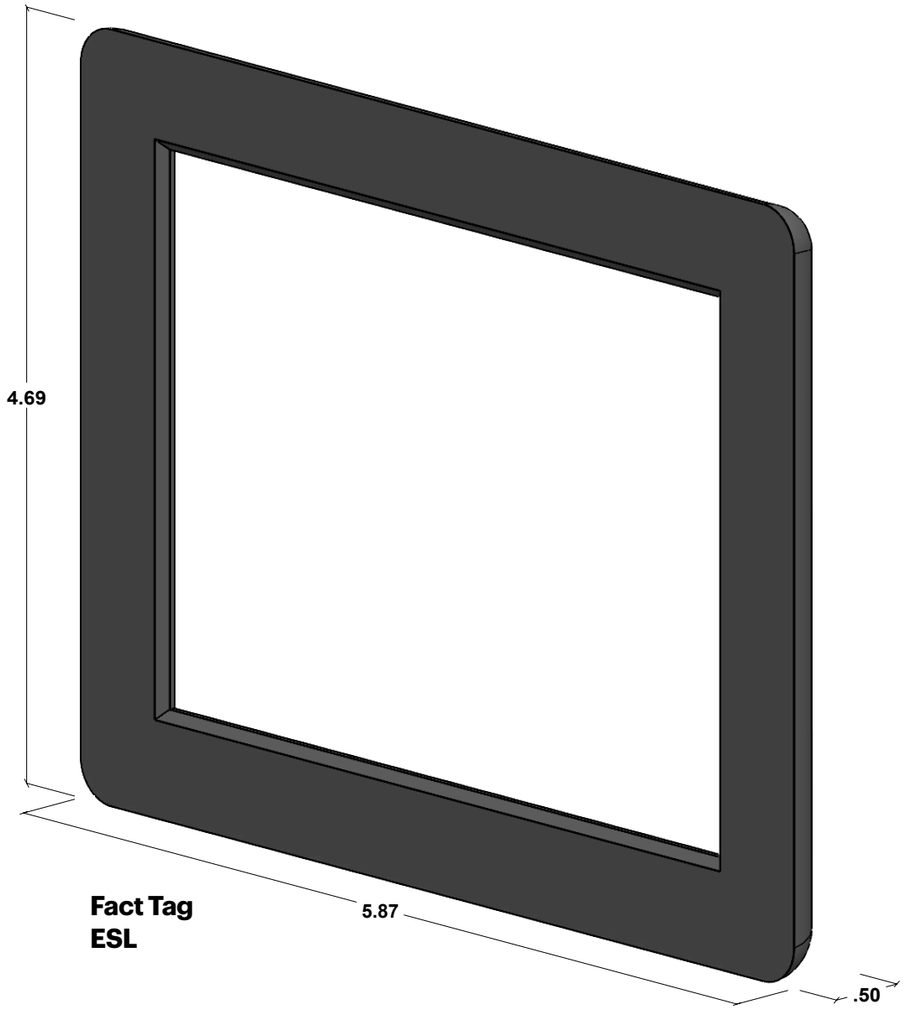

Fact Tag
ESL

Last Updated August 12, 2026 8:20 AM | Best Buy partner and internal use only. Do not copy, publish, or distribute. The material in this document is confidential to Best Buy.

Attachments — Peg Label ESL

ESLs are displayed on fixtures using a variety of attachments. In some cases, multiple attachments connect to each other to attach an ESL to the fixture.

The examples at right show a single-attachment display (preferred) and a multi-attachment display.

For a complete list of attachments, see pages 7–9.

> ***Note:*** *If you are designing your own fixture, consider designing it to fit the ESL without requiring additional attachments (see example on page 5).*

Single-Attachment Display *(Preferred)*

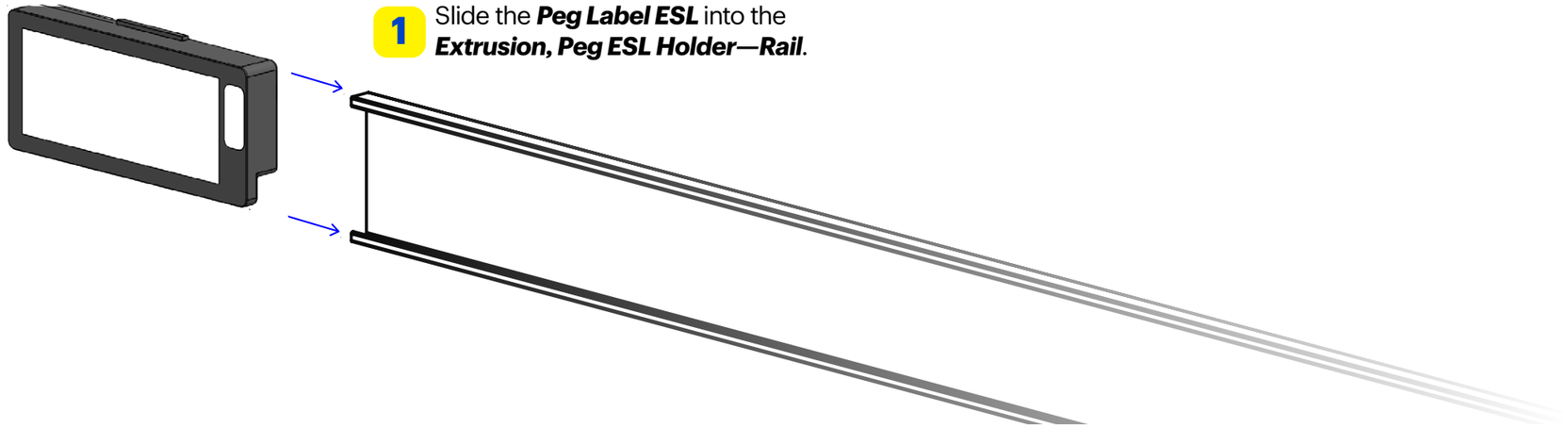

1 Slide the ***Peg Label ESL*** into the ***Extrusion, Peg ESL Holder—Rail***.

Multi-Attachment Display

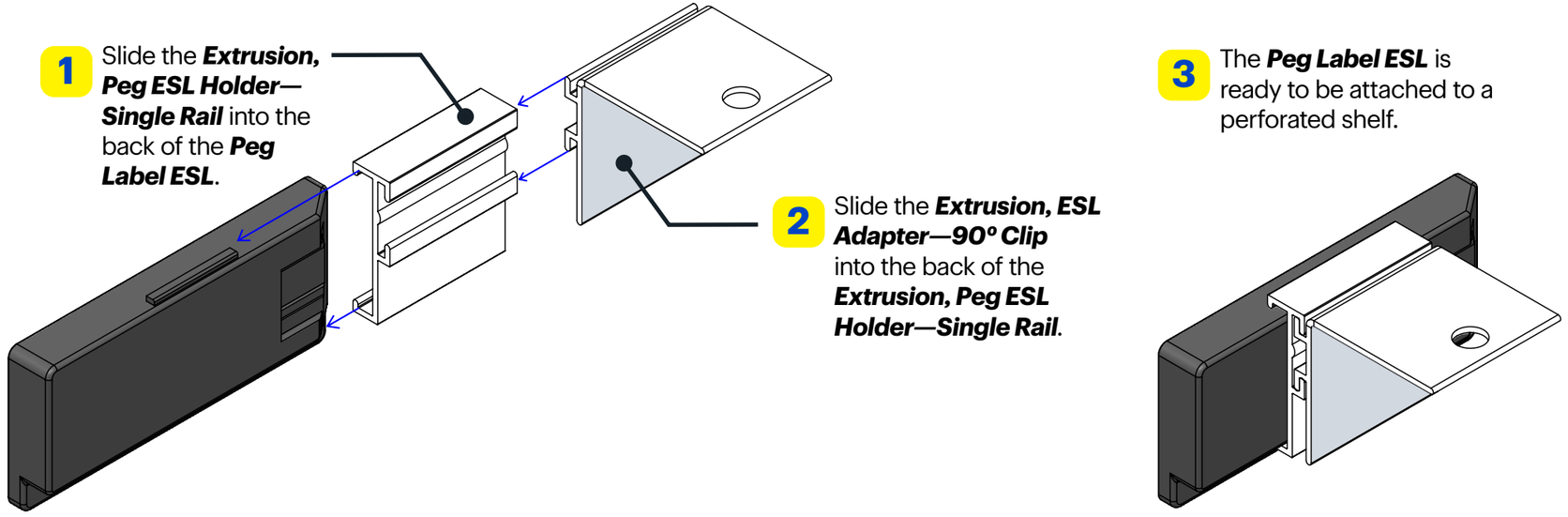

1 Slide the ***Extrusion, Peg ESL Holder—Single Rail*** into the back of the ***Peg Label ESL***.

2 Slide the ***Extrusion, ESL Adapter—90° Clip*** into the back of the ***Extrusion, Peg ESL Holder—Single Rail***.

3 The ***Peg Label ESL*** is ready to be attached to a perforated shelf.

Last Updated August 12, 2026 8:20 AM | Best Buy partner and internal use only. Do not copy, publish, or distribute. The material in this document is confidential to Best Buy.

Attachments — Fact Tag ESL

ESLs are displayed on fixtures using a variety of attachments. In some cases, multiple attachments connect to each other to attach an ESL to the fixture.

The examples at right show a single-attachment display and a multi-attachment display.

For a complete list of attachments, see pages 7–9.

> ***Note:*** *If you are designing your own fixture, consider designing it to fit the ESL without requiring additional attachments (see example below).*

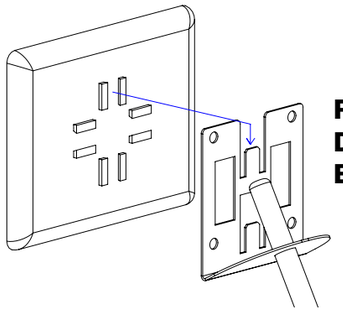

Fixture Design Example

Single-Attachment Display

1 Stick the ***Panel, Fact Tag ESL Holder—Appliance*** to the back of the ***Fact Tag ESL***.

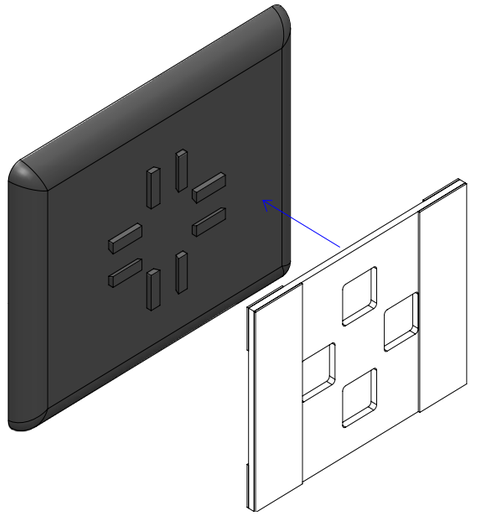

2 The ***Fact Tag ESL*** is ready to be displayed.

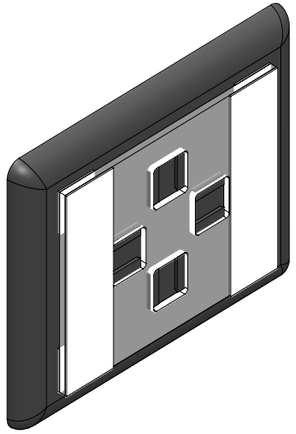

Multi-Attachment Display

1 Slide the ***Extrusion, ESL Adapter—90° Clip*** into the top row notches on the back of the ***Injection Molded, Fact Tag ESL to Peghook Attach Holder***.

2 Slide the notch at the base of the ***Injection Molded, Fact Tag ESL to Peghook Attach Holder*** upward into the bottom notch on the back of the ***Fact Tag ESL***.

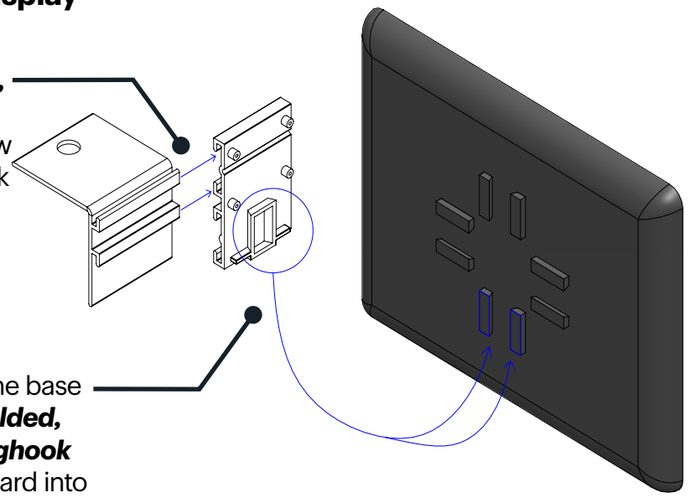

3 The ***Fact Tag ESL*** is ready to be attached to a perforated shelf.

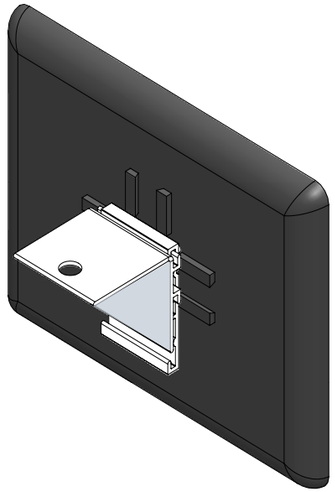

Last Updated August 12, 2026 8:20 AM | Best Buy partner and internal use only. Do not copy, publish, or distribute. The material in this document is confidential to Best Buy.

Merchandising

Vendor Expectations

- Support all products, display or salable, with a proximally located peg label or fact tag ESL.
- Refer to the lists below for which ESL type is most commonly used in different departments/categories.

  Note: *Please* ***confirm*** *with your Best Buy contact which ESL type you will be required to use.*

Peg Label ESL

1) All accessories
2) Digital Imaging
3) Floorcare
4) Headphones
5) Health & Fitness
6) Mobile
7) Portable Speakers
8) Small Appliances
9) Smart Home
10) SPU Bins
11) Soundbars/Audio
12) Streaming
13) Wearables

Fact Tag ESL

1) Computing
2) Gaming
3) PC Gaming
4) Televisions

Best Practices

- In your displays, lead with the product followed by the ESL directly to the right of or in front of the product so the associated price is easily identifiable.



Last Updated August 12, 2026 8:20 AM | Best Buy partner and internal use only. Do not copy, publish, or distribute. The material in this document is confidential to Best Buy.

Fixture Parts

Refer to the part numbers below when ordering any necessary components:

Fixture Attachments

Component	Drawing	Best Buy Part Number
Extrusion, ESL Adapter—120° Clip		1010375
Extrusion, ESL Adapter—90° Clip		1010376
Extrusion, ESL Adapter—Freestanding	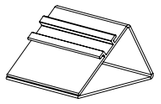	1010377
Extrusion, ESL Adapter—Thin Rail Clip	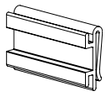	1010461
Extrusion, ESL Adapter—Rail Clip	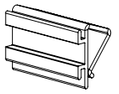	1010374
Extrusion, ESL Adapter—Merchandise Bar Clip	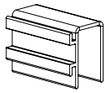	1010373
Extrusion, ESL Adapter—Up to 1” Shelf Clip	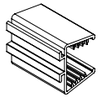	1010372

Component	Drawing	Best Buy Part Number
Extrusion, Peg ESL Holder—4’ Rail	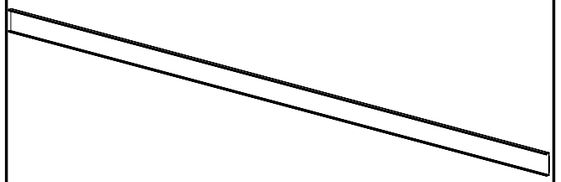	1005391
Extrusion, Peg ESL Holder—2’ Rail	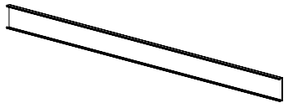	1006893
Extrusion, Peg ESL Holder—4’ Media Wire Rail	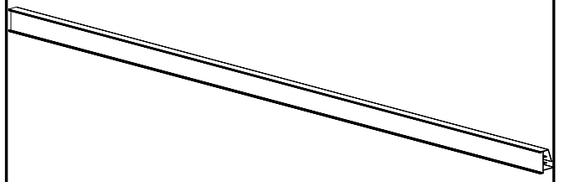	1005401
Extrusion, Peg ESL Holder—2’ Media Wire Rail		1006894

Last Updated August 12, 2026 8:20 AM | Best Buy partner and internal use only. Do not copy, publish, or distribute. The material in this document is confidential to Best Buy.

Fixture Parts

Refer to the part numbers below when ordering any necessary components:

Peg Label ESL Attachments

Component	Drawing	Best Buy Part Number
Extrusion, Peg ESL to Peghook Attach Holder		1010371
Extrusion, Peg ESL Holder—Wire Hook		1005392
Extrusion, Peg ESL Holder—Angled Peghook		1005393
Extrusion, Peg ESL Holder—Single Rail	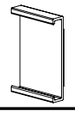	1005394

Last Updated August 12, 2026 8:20 AM | Best Buy partner and internal use only. Do not copy, publish, or distribute. The material in this document is confidential to Best Buy.

Fixture Parts

Refer to the part numbers below when ordering any necessary components:

Fact Tag ESL Attachments

Component	Drawing	Best Buy Part Number
Injection Molded Fact Tag ESL to Peghook Attach Holder	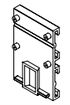	1010370
Panel, Fact Tag ESL Holder—Appliance	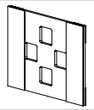	1005397
Panel, Fact Tag ESL Holder—Appliance Top	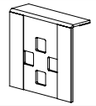	1006950
Fact Tag ESL Table Assembly	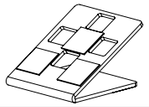	1005396
Injection Molded Fact Tag ESL Holder—Appliance	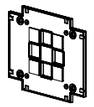	1010378
Panel, Fact Tag ESL Holder—Dishwasher Doghouse	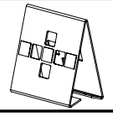	1010174

Component	Drawing	Best Buy Part Number
Fact Tag ESL Shelf Lip Assembly	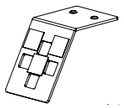	1005395
Panel, Bulk Stack ESL Holder—Freestanding	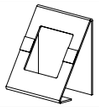	1010314
Panel, Bulk Stack ESL Holder—Box Stock		1005400

Last Updated August 12, 2026 8:20 AM | Best Buy partner and internal use only. Do not copy, publish, or distribute. The material in this document is confidential to Best Buy.

Fit Cubby

VPP Guidelines

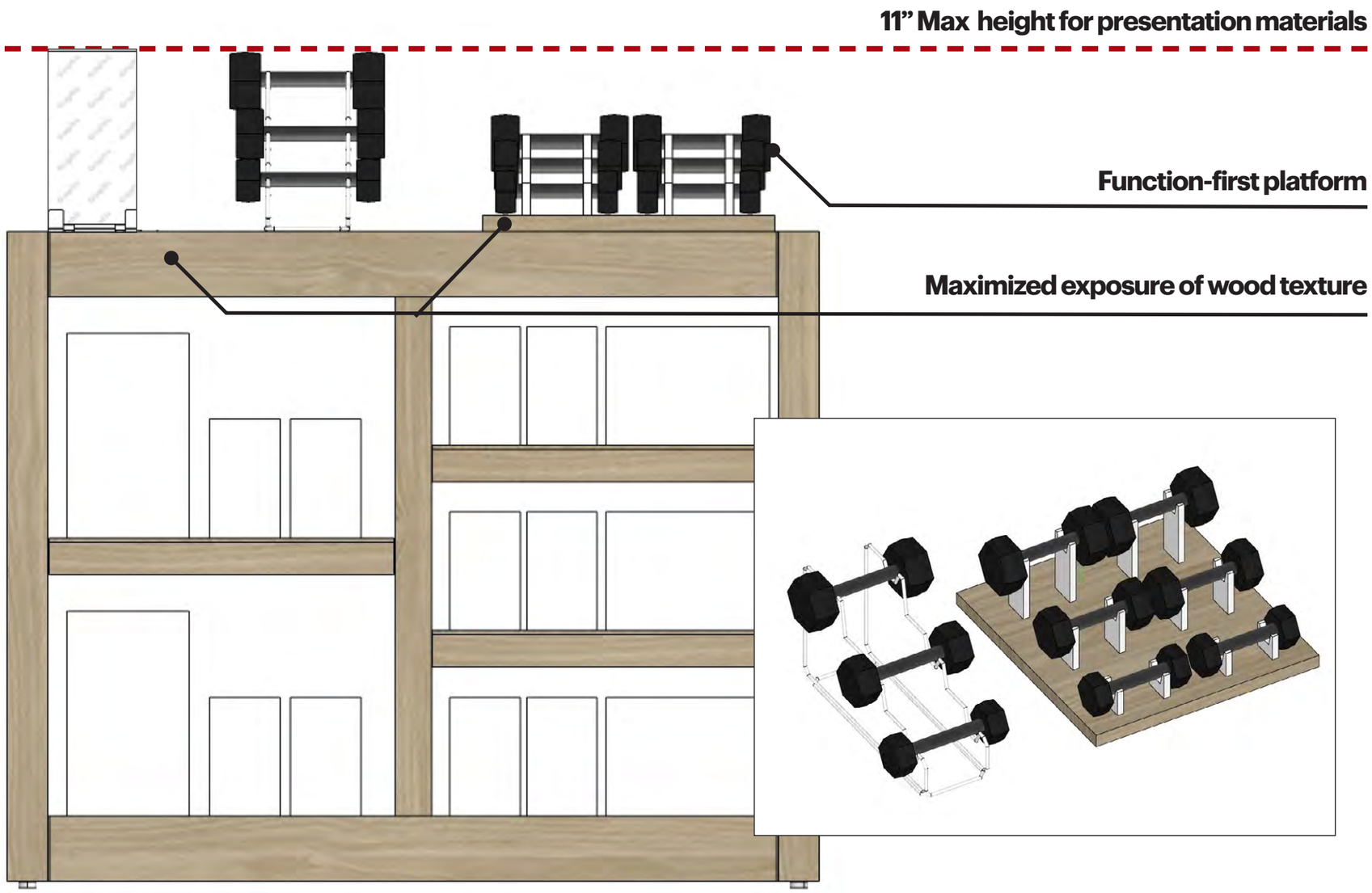

- The top of the cubby fixture can be divided into two 17.5” linear presentations or a single 39” presentation.
- The primary function of VPP materials should be functional: securing, elevating and containing product.
- Product platforms should match the Saarinen Driftwood cubby material.
- Posts and hardware should be white (black is also optional, but requires individual approval).
- Containment and risers should be white (black is also optional, but requires individual approval).
- Product, platforms, containment and risers should have a maximum height of 11”.
- One angled 5.5”x11” single-sided graphic is allowed per presentation.
- To ensure the premium look and feel of the space, no large headers or backer cards or dividers will be allowed.

Last Updated August 12, 2026 8:20 AM | Best Buy partner and internal use only. Do not copy, publish, or distribute. The material in this document is confidential to Best Buy.

Presentation Alternatives

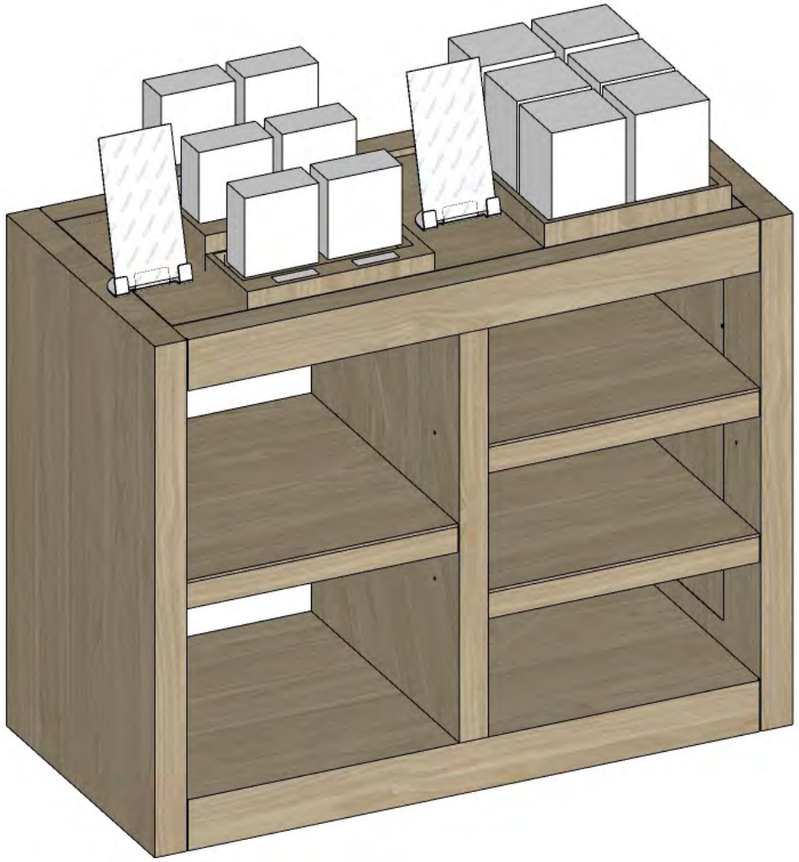

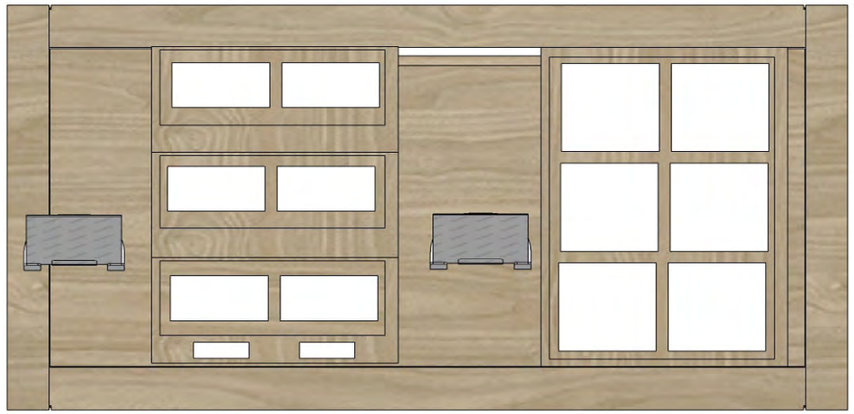

- Boxed display products or salable stock can also be leveraged as a secondary option for the top of the cubbies.
- Premium bins, trays, or product risers can increase visual interest and encourage engagement with display boxed stock.
- Product platforms should match the Saarinen Driftwood cubby material.
- Posts and hardware should be white (black is also optional, but requires individual approval).
- Containment and risers should be Saarinen Driftwood or white (black is also optional, but requires individual approval).
- Displays, platforms, containment and risers should have a maximum height of 11”.

Last Updated August 12, 2026 8:20 AM | Best Buy partner and internal use only. Do not copy, publish, or distribute. The material in this document is confidential to Best Buy.

Graphic Holder



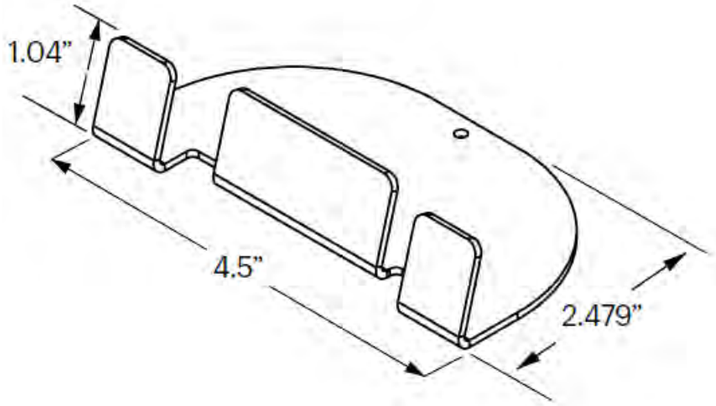

- Reference EPDM# 1021705 for build reference.
- Holder will cover a portion of the bottom of the graphic.
- Standard graphic size 5.5”W x 11”W. This graphic size should be used whenever partnered with a product display.
- Larger 8.5”W x 11H graphic can be used only when no product display is possible. These larger graphics should always appear on their own without any display accompaniment.
- Holder will be metal finished in Fine White Texture Tiger Drylac Powdercoat.

Last Updated August 12, 2026 8:20 AM | Best Buy partner and internal use only. Do not copy, publish, or distribute. The material in this document is confidential to Best Buy.

Graphic Templates

- The 5.5”W x11”H graphic should showcase the brand and should provide storytelling for the adjacent products.
- Larger 8.5”W x 11H graphic can be used only when no product display is possible. These larger graphics should always appear on their own without any display accompaniment.
- 3mm Sintra should be used as the print substrate.

5.5" x 11" Template

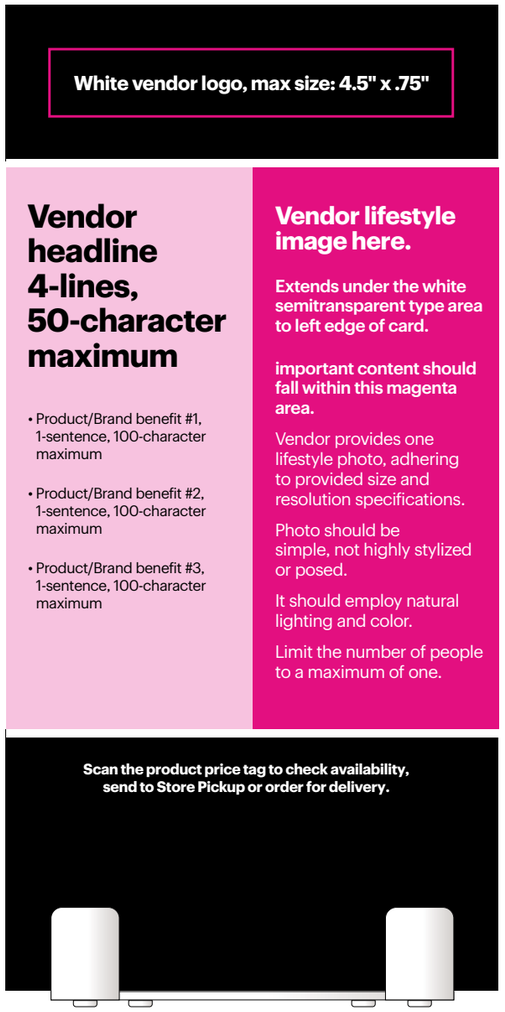

The vendor provides all content, adhering to the Best Buy Vendor Guidelines:

Vendor follows the provided template’s exact dimensions, type sizes, type styles and character counts.

Vendor may include **up to 3** bullet points.

Please note:
Per Best Buy copy standards, **single-sentence bullet points should not include a period at the ends of sentences.**

Copy lays on top of white area. White area has transpanrency set at 75%.

8.5"x 11" Template

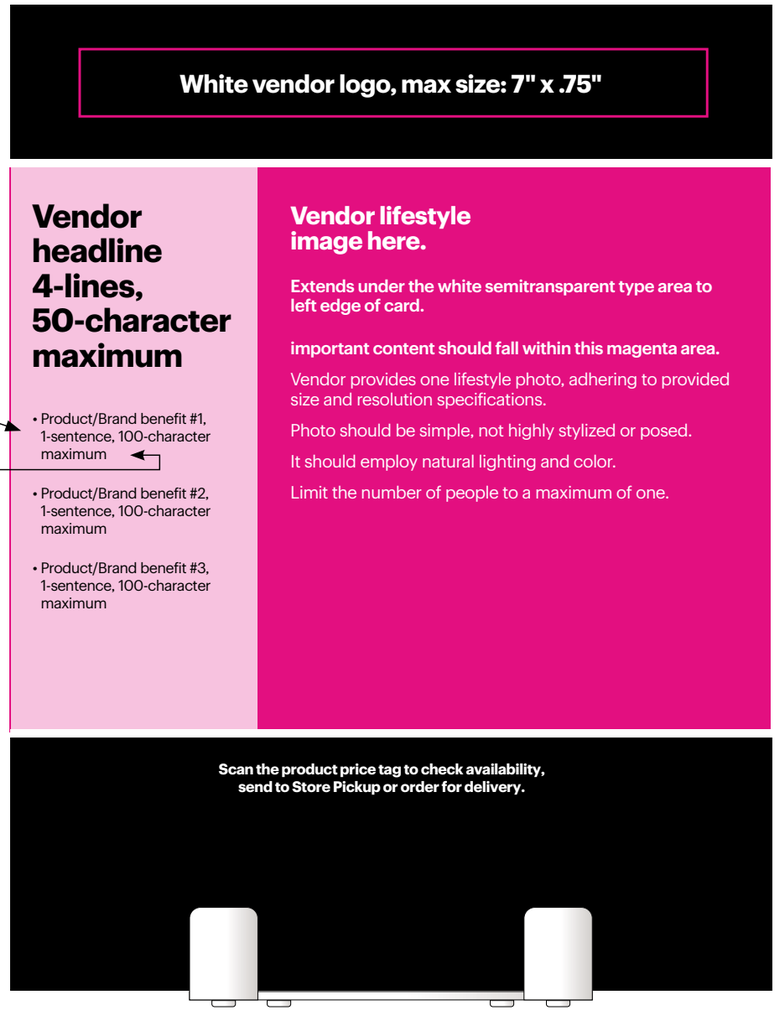

Last Updated August 12, 2026 8:20 AM | Best Buy partner and internal use only. Do not copy, publish, or distribute. The material in this document is confidential to Best Buy.

Populated Examples

- The 5.5”W x11”H graphic should showcase the brand and should provide storytelling for the adjacent products.
- Larger 8.5”W x 11H graphic can be used only when no product display is possible. These larger graphics should always appear on their own without any display accompaniment.
- 3mm Sintra should be used as the print substrate.

5.5"x 11" Populated example

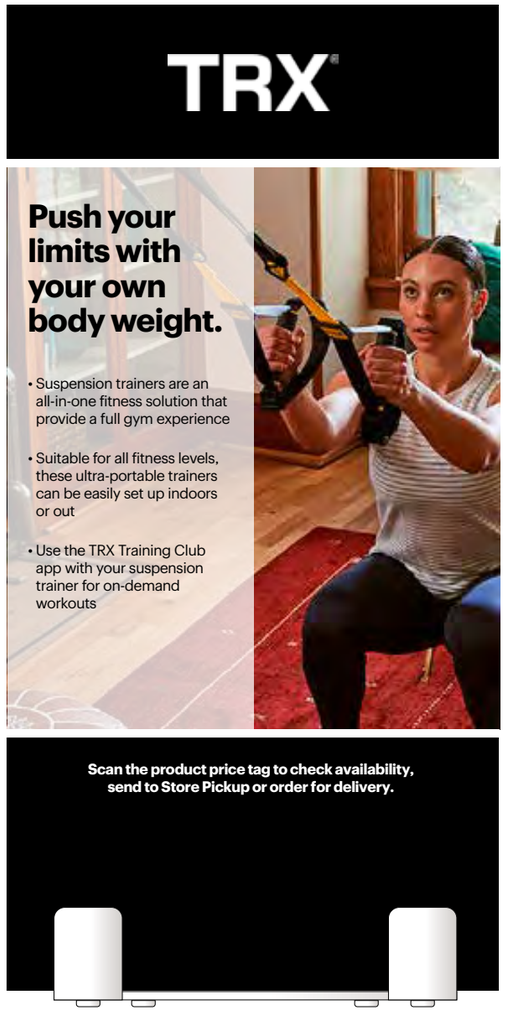

8.5"x 11" Populated example

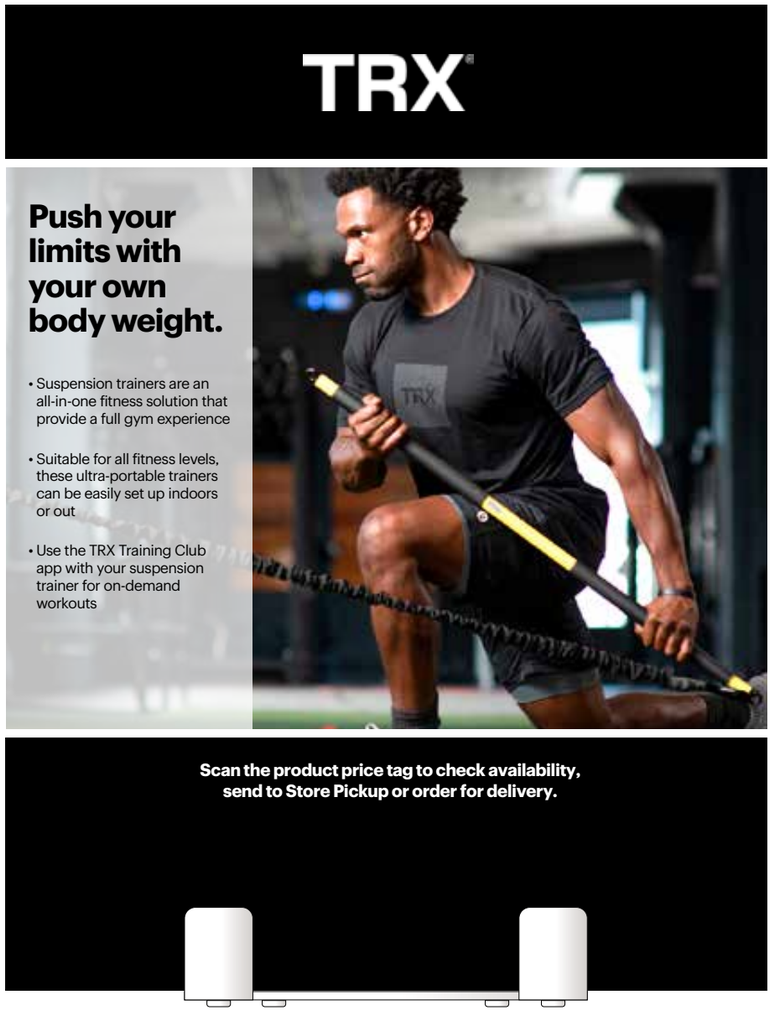

Last Updated August 12, 2026 8:20 AM | Best Buy partner and internal use only. Do not copy, publish, or distribute. The material in this document is confidential to Best Buy.

Technical Drawings

Graphic Space
6”W X 19”D



Single Brand Story (One Vendor)

Graphic Space
6”W X 19”D

Graphic Space
6”W X 19”D

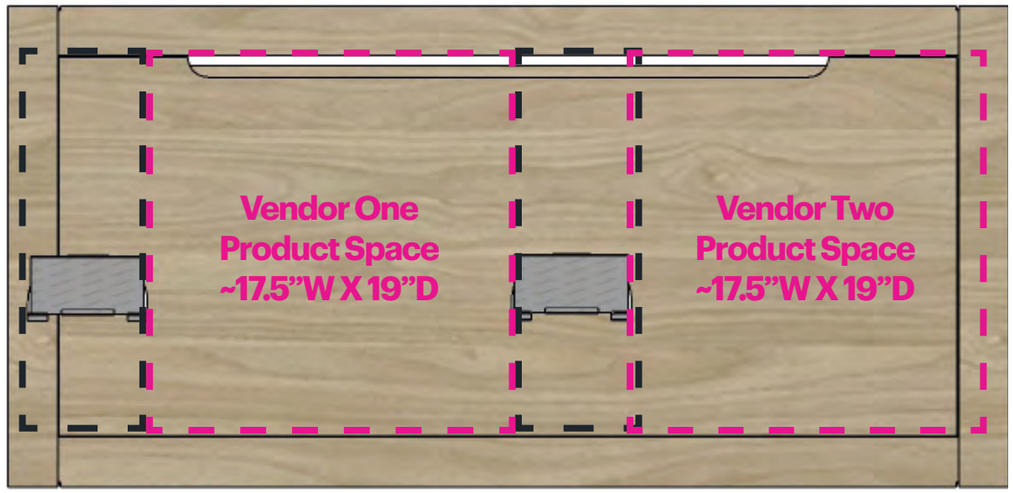

Split Brand Story (Two Vendors)

See EPDM# 1020121 for fixture details. Fixture drawings and detailed dimensions are available upon request from BBY Engineering team.

Engineering@bestbuy.com

Last Updated August 12, 2026 8:20 AM | Best Buy partner and internal use only. Do not copy, publish, or distribute. The material in this document is confidential to Best Buy.

Floor Care & Robotic Vacuums

Overview

Use these guidelines to present your floor care products in a clean and consistent way within Best Buy stores. Clear expectations are set to ensure all brands are represented in the same way for an optimal customer experience.

This document focuses on:

Upright/Stick Vacuums
Robot Vacuums

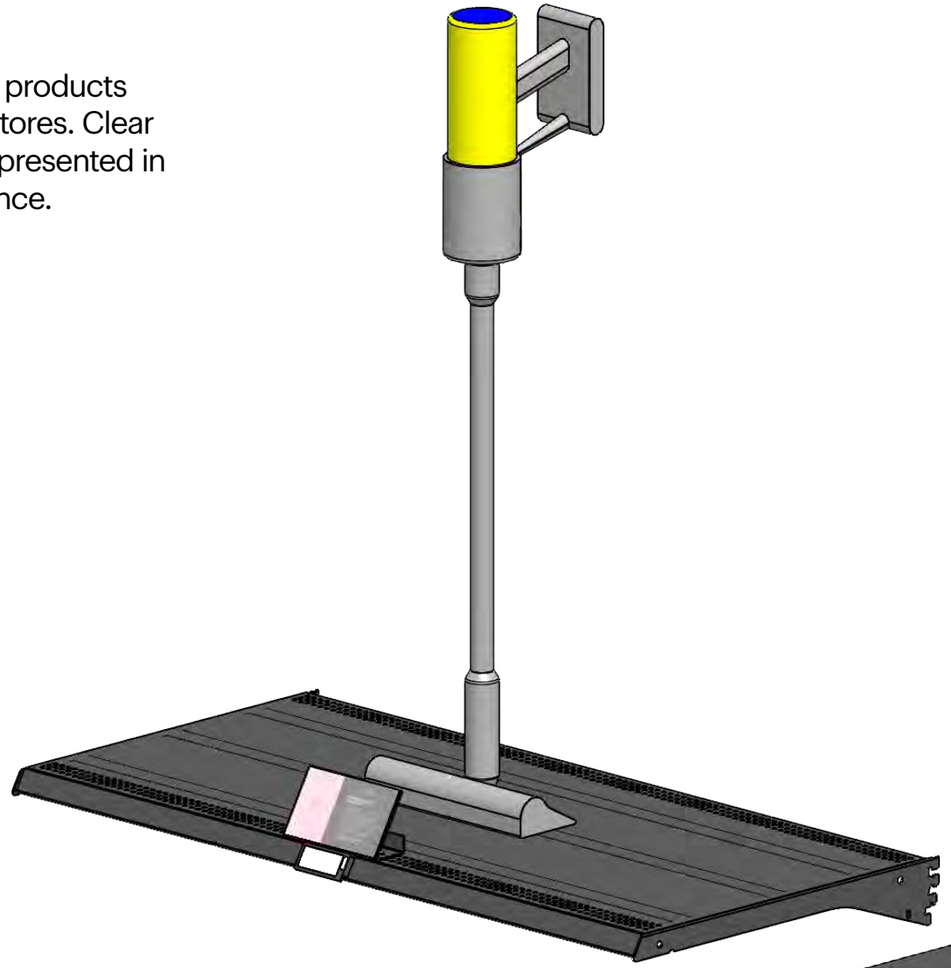

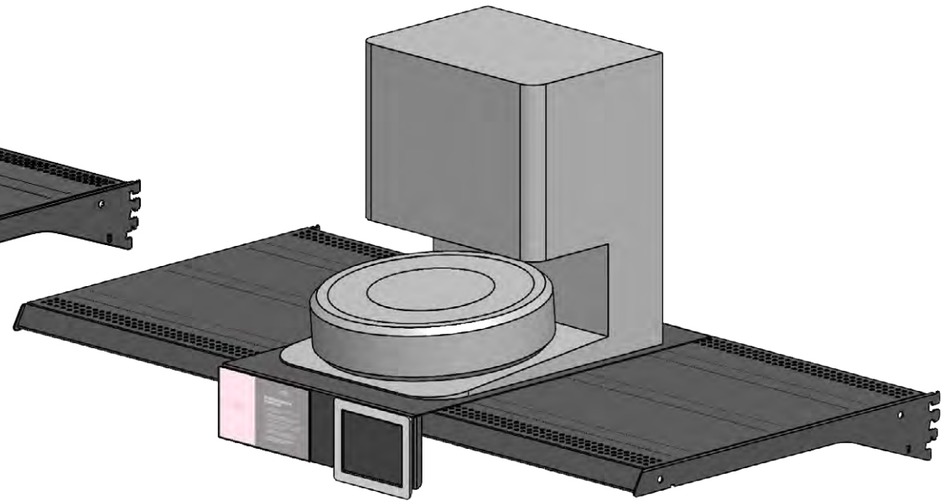

Last Updated August 12, 2026 8:20 AM | Best Buy partner and internal use only. Do not copy, publish, or distribute. The material in this document is confidential to Best Buy.

Attachments

Upright/Stick Vacuums ONLY

- Ensure all products on display are non-functional.
- Physically tether your product to the 22” shelf or to a discreet base plate that can tether to the shelf to avoid drilling directly through your product.
  Preferred: *Attach to the shelf’s perforated pattern using threaded studs with washers and wingnuts.*
- Use, if needed, a merchandise bar to support products that don’t stand upright on their own. Avoid obscuring the brand logo header with the merchandise bar or other fixture parts.
- Produce a 7”W x 4”H metal product info card holder following the specifications in Best Buy’s drawing. Ask your Best Buy contact for details.
- Attach the holder to the shelf in front of the product, and ensure product appears below the top lip of the holder as an additional means of presentation stability.

**Drawings and models of all parts available upon request.*

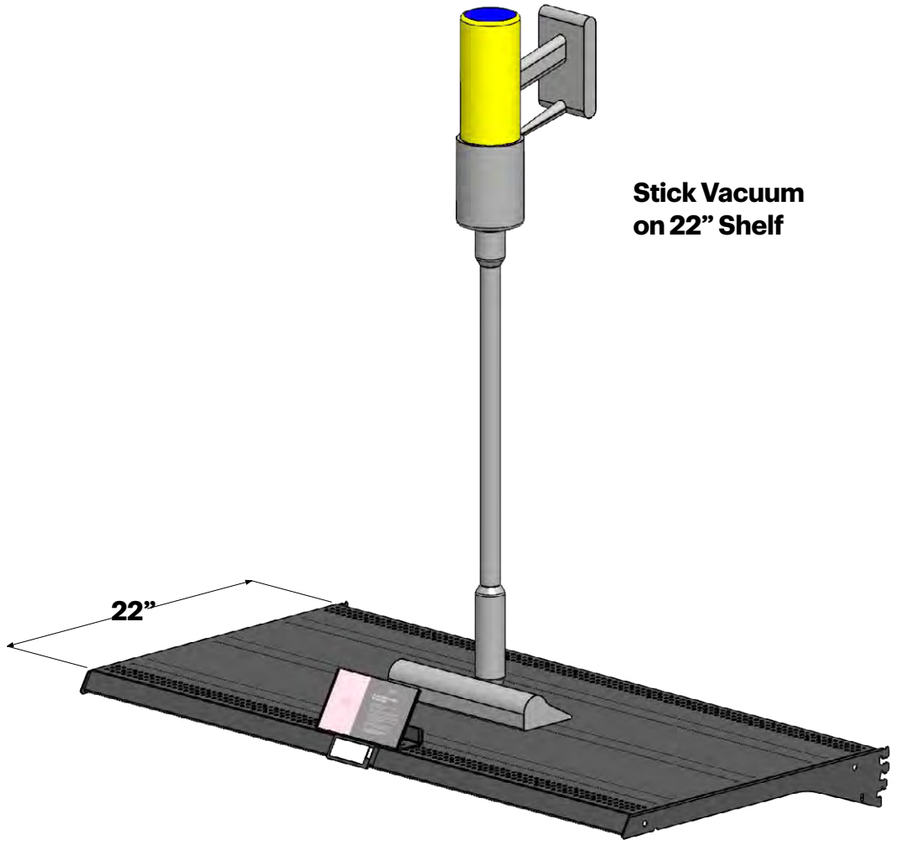

Stick Vacuum on 22” Shelf

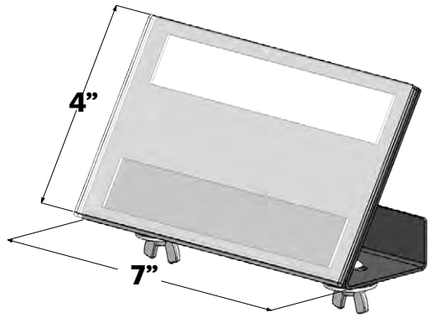

Product Info Card Holder

Perforated Shelf Attachment

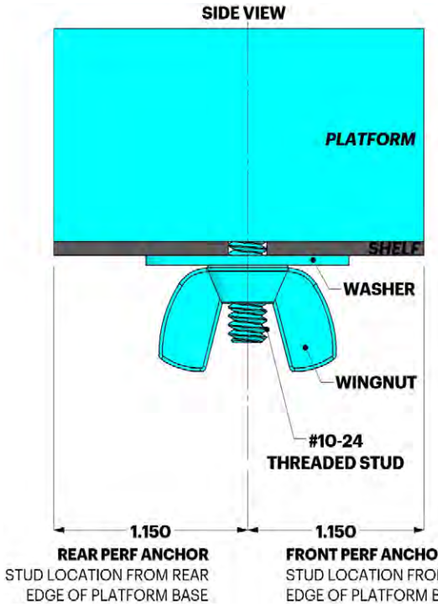

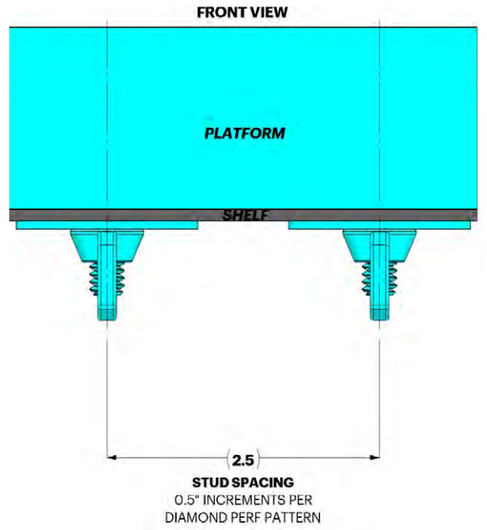

Last Updated August 12, 2026 8:20 AM | Best Buy partner and internal use only. Do not copy, publish, or distribute. The material in this document is confidential to Best Buy.

Attachments

Robot Vacuums ONLY

- Ensure all products on display are non-functional.
- Physically tether your product to a vendor-created metal platform designed by Best Buy.
  Material: 1010/1018 Mild Steel
  Finish: Powder Coat - PC938 Matte Black - IFS Coatings Inc., PLSM10812CN
- Attach metal platform to a 22” shelf’s perforated pattern using threaded studs with washers and wingnuts.

**Note:* *Platforms are required for all robot vacuums unless otherwise approved as part of a vendor-branded section.*

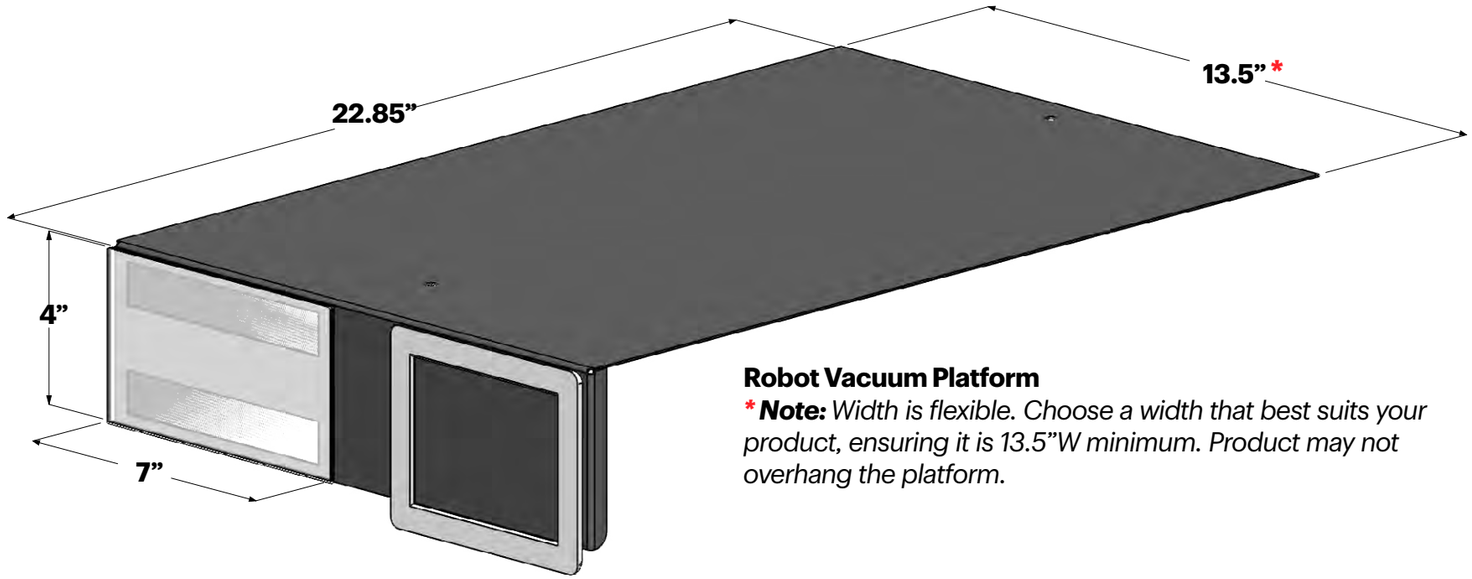

Robot Vacuum Platform
* ***Note:*** *Width is flexible. Choose a width that best suits your product, ensuring it is 13.5”W minimum. Product may not overhang the platform.*

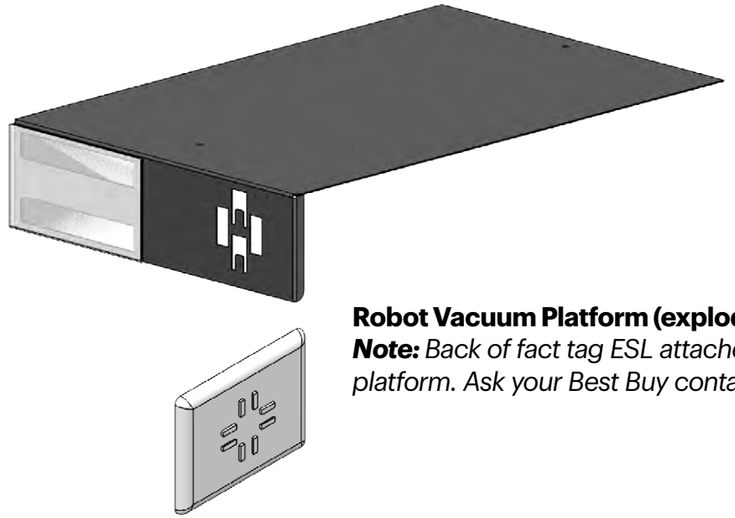

Robot Vacuum Platform (exploded view)
Note: *Back of fact tag ESL attaches through cutouts in platform. Ask your Best Buy contact for detailed drawings.*

Last Updated August 12, 2026 8:20 AM | Best Buy partner and internal use only. Do not copy, publish, or distribute. The material in this document is confidential to Best Buy.

Graphics:
Product Info Card

Vendor Expectations

- Include a product info card for each SKU on display to help customers easily compare features across products.
- Comply with all copy, design, size, substrate, etc. requirements outlined below and in Partner Portal.
  Size: 7”W x 4”H
  Substrate: 12pt C1S, White

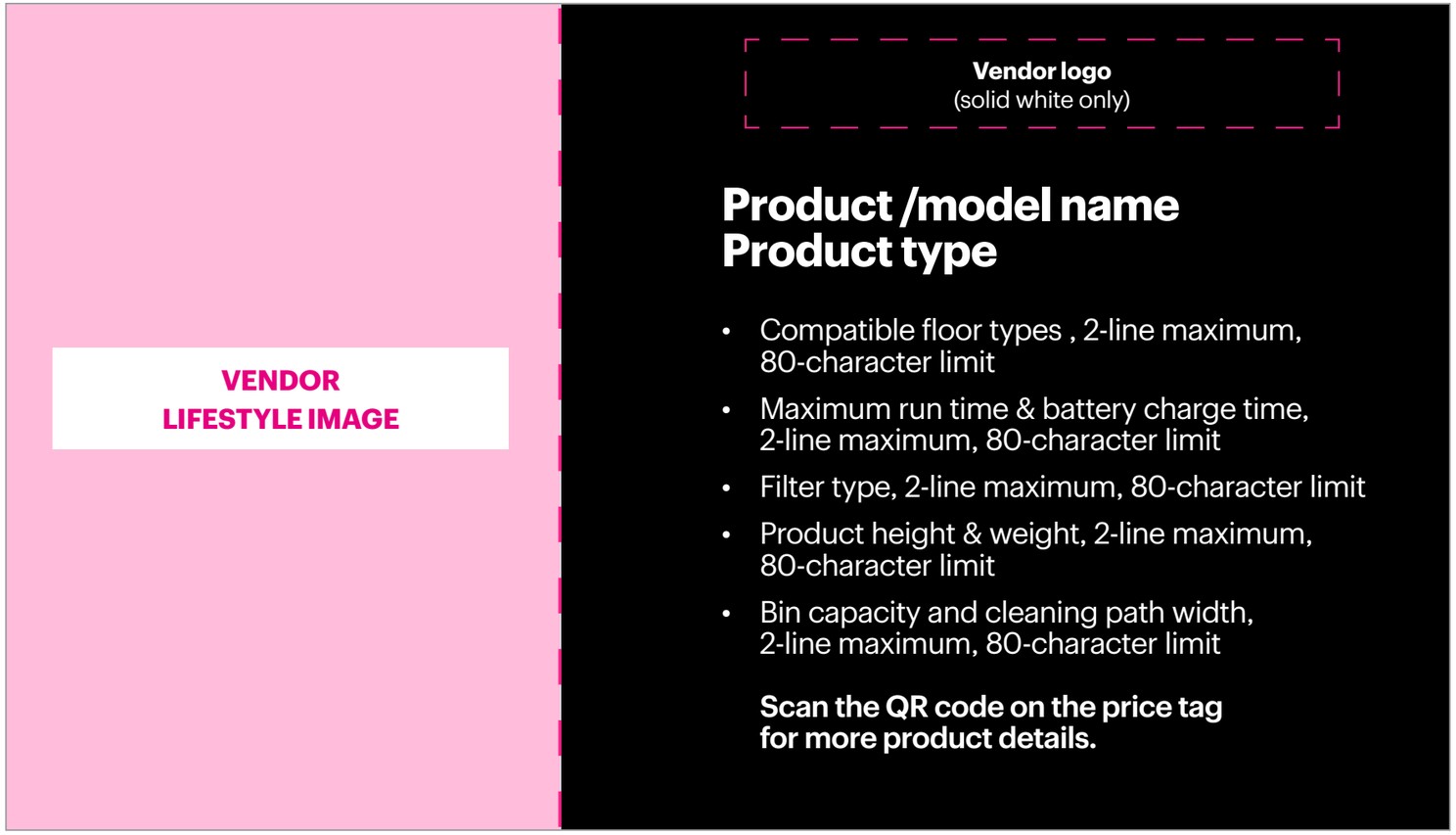

Product Info Card template

Last Updated August 12, 2026 8:20 AM | Best Buy partner and internal use only. Do not copy, publish, or distribute. The material in this document is confidential to Best Buy.

Graphics:
POP

Vendor Expectations

- Include up to two POP on each display product, if desired.
- Ensure graphics remain within the product footprint and cover no more than 20% of the total product surface area.
- Comply with Copy & Claims guidelines in Partner Portal.



Note: *Pink denotes recommended areas of POP activation.*



Find more details and dimensions in this guide on Partner Portal:

Copy & Claims

Last Updated August 12, 2026 8:20 AM | Best Buy partner and internal use only. Do not copy, publish, or distribute. The material in this document is confidential to Best Buy.

Merchandising

Vendor Expectations

- Support all products with a proximally located Electronic Shelf Label (ESL), determined by vacuum type.
  Upright/Stick Vacuums: Peg label-sized ESL
  Robot Vacuums: Fact tag-sized ESL

Best Practices

- Be mindful when merchandising your display to ensure all products are front-aligned and do not jog.

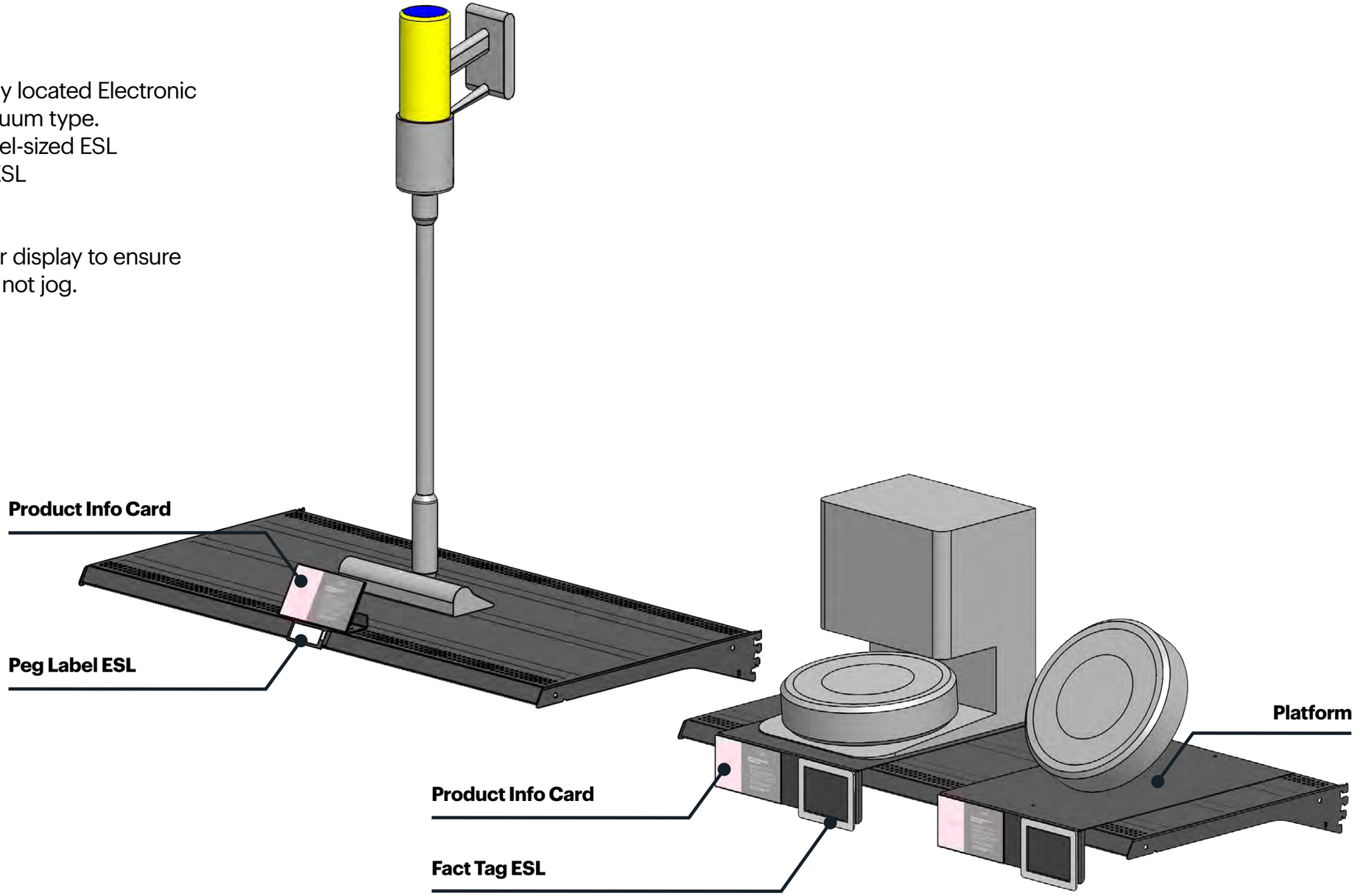

Last Updated August 12, 2026 8:20 AM | Best Buy partner and internal use only. Do not copy, publish, or distribute. The material in this document is confidential to Best Buy.

Fixture Parts

Refer to the part numbers below when ordering any necessary components:

Fixture Component	Best Buy Part Number
Robotic Vacuum Display Platform Assembly	1024995
Product Info Card Holder, 7”W x 4”H	1025000
Standard Shelf — Black, 22”	1012251
Standard Lowbay Gondola Assembly (24” Base Deck)	R0010
Merchandise Bar — Black, 1.5”D (Standard Depth)	1010753
Merchandise Bar — Black, Heavy Duty, 1.5”D (Standard Depth)	1010634
Merchandise Bar — Black, Extended 6”	1010744
Merchandise Bar — Black, Extended 8”	1010750
Merchandise Bar — Black, Extended 10”	1010625

Last Updated August 12, 2026 8:20 AM | Best Buy partner and internal use only. Do not copy, publish, or distribute. The material in this document is confidential to Best Buy.

Focal Frame

Focal frame

Guidelines:

- Focal frame is used to give brand presence to the tables
- There are different add-ons that can be added to the focals which are shown within this deck.
- Any items not meeting Best Buy specifications must be approved by Best Buy.

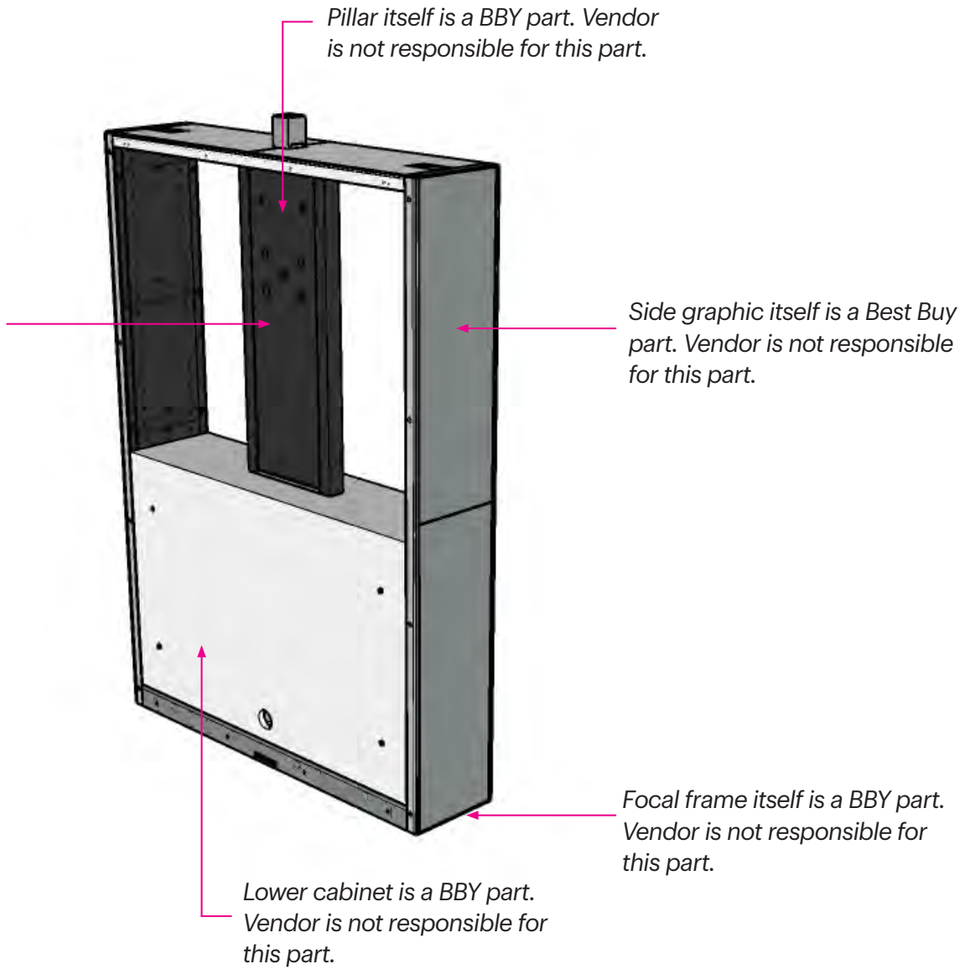

Last Updated August 12, 2026 8:20 AM | Best Buy partner and internal use only. Do not copy, publish, or distribute. The material in this document is confidential to Best Buy.

Focal frame – DI / Camera lens case

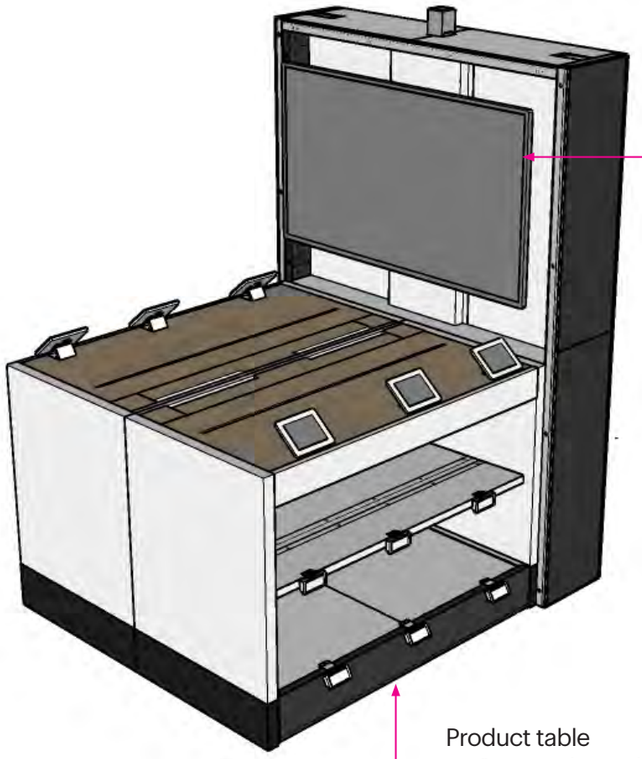

Monitor, lit graphic or unlit graphic can be used. See pages 3, 5 and 7.

Lens case
- Best Buy will have drawings for this full insert
- Will utilize the Best Buy lens holder



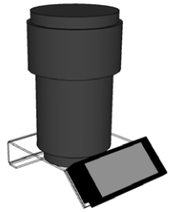

Lens holder with ESL, if solidworks files are needed Best Buy can provide

Product table
- See product table vendor guidelines deck

Store Design

Last Updated August 12, 2026 8:20 AM | Best Buy partner and internal use only. Do not copy, publish, or distribute. The material in this document is confidential to Best Buy.

Focal frame – DI / Camera lens case

COPYRIGHT © - SEE SHEET 1

ITEM NO.	PART NUMBER	DESCRIPTION	QTY.
1	1013493	ASSY, 51" X 72" - FOCAL FRAMES	1
2	1010340	ASSY, CABINET INSERT - FOCAL FRAMES	1
3	MOCK MONITOR		1
4	1016946	PRODUCT TABLE TOP ASSY	1
5	1010344	ASSY, SLIDING DOOR KIT, 51" X 72" - FOCAL FRAME	1

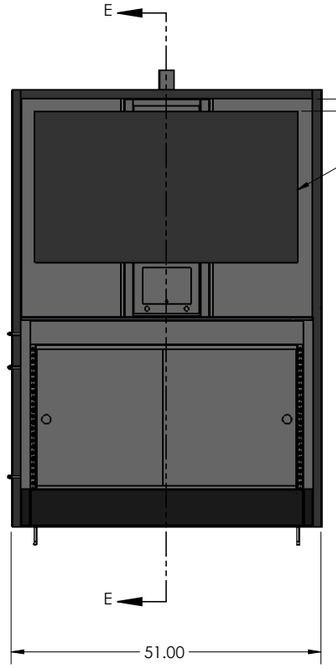

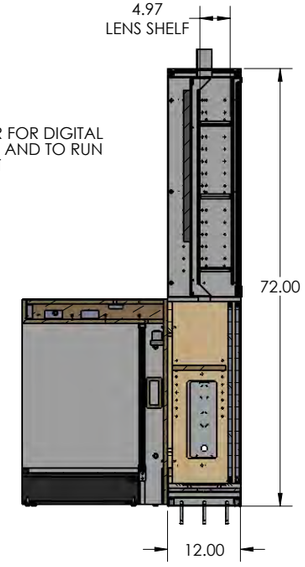

SECTION E-E
SCALE 1 : 16

Monitor option note:
- Monitor and mount are not available in solidworks
- Monitor spec is a 50" Samsung 50QMR/QBR
- Monitor mount is a Sanus VMPL3
- Monitor mount bolts directly to the focal pillar

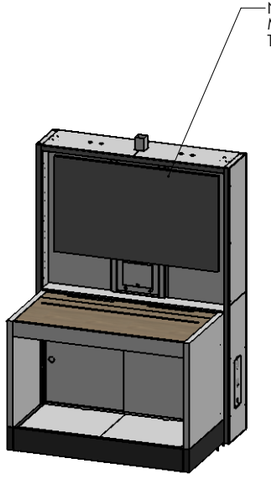

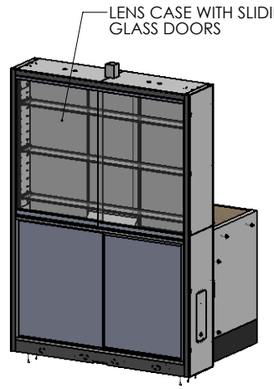

Note:
Product table shown as a reference as there are multiple table layout options. See product table guidelines for additional information.

SCALE: 1:24	DRAWING NO.:	REV.:	BEST BUY
SHEET: 5 of 7			

Last Updated August 12, 2026 8:20 AM | Best Buy partner and internal use only. Do not copy, publish, or distribute. The material in this document is confidential to Best Buy.

Focal frame – Lowbay gondola endcap

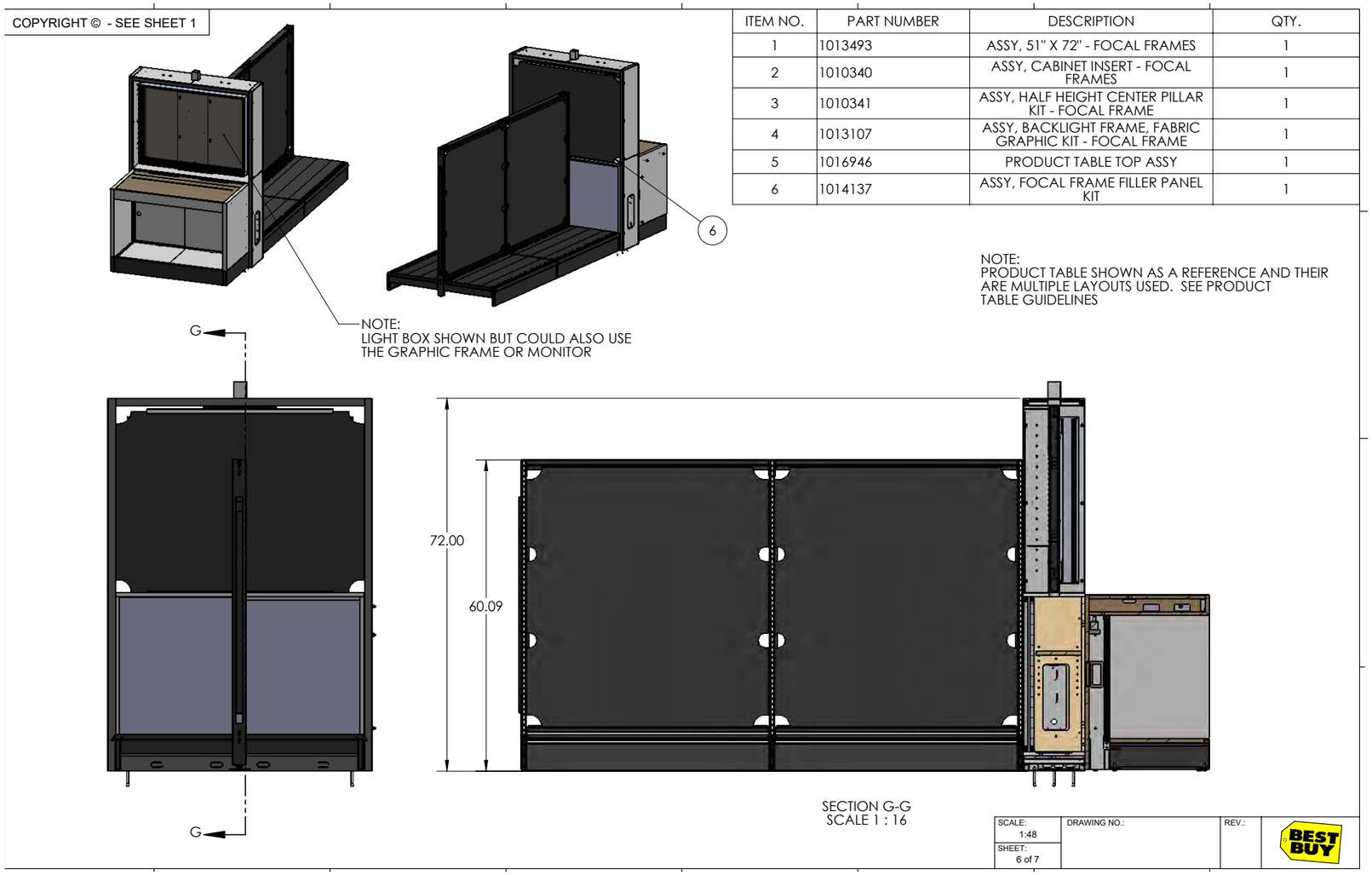

ITEM NO.	PART NUMBER	DESCRIPTION	QTY.
1	1013493	ASSY, 51" X 72" - FOCAL FRAMES	1
2	1010340	ASSY, CABINET INSERT - FOCAL FRAMES	1
3	1010341	ASSY, HALF HEIGHT CENTER PILLAR KIT - FOCAL FRAME	1
4	1013107	ASSY, BACKLIGHT FRAME, FABRIC GRAPHIC KIT - FOCAL FRAME	1
5	1016946	PRODUCT TABLE TOP ASSY	1
6	1014137	ASSY, FOCAL FRAME FILLER PANEL KIT	1

Last Updated August 12, 2026 8:20 AM | Best Buy partner and internal use only. Do not copy, publish, or distribute. The material in this document is confidential to Best Buy.

Focal frame – Full-sized graphic on back

Guidelines:

- Two different graphic size options for the back side of the focal frame when there is no table on the back side



Half lightbox graphic



Full lightbox graphic

Last Updated August 12, 2026 8:20 AM | Best Buy partner and internal use only. Do not copy, publish, or distribute. The material in this document is confidential to Best Buy.

Focal frame – Slatwall

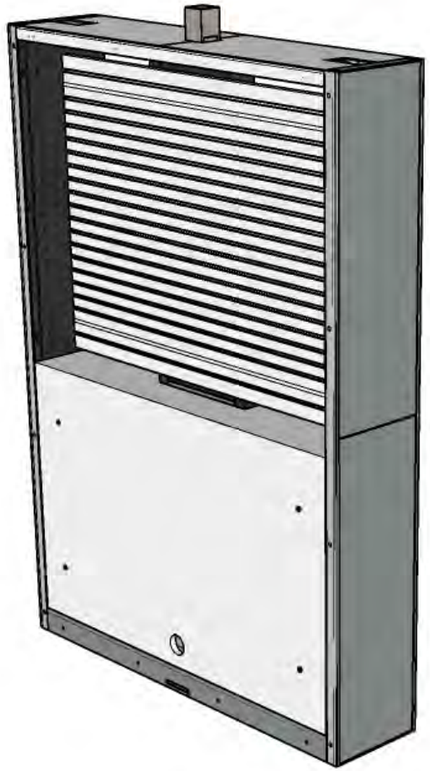

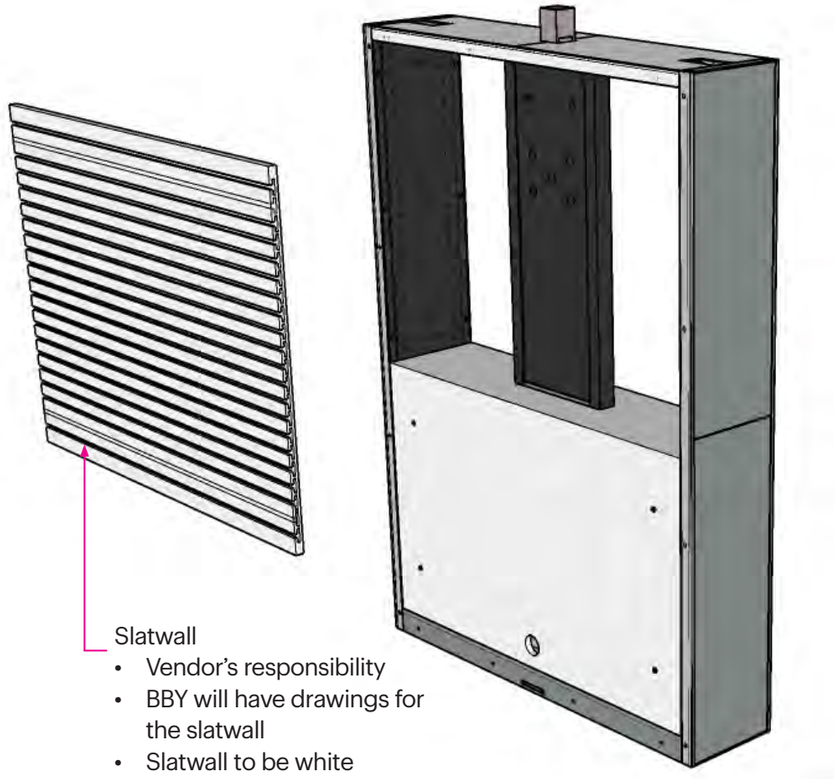

Slatwall
- Vendor’s responsibility
- BBY will have drawings for the slatwall
- Slatwall to be white

Last Updated August 12, 2026 8:20 AM | Best Buy partner and internal use only. Do not copy, publish, or distribute. The material in this document is confidential to Best Buy.

Focal frame – Table layout

Guidelines:

- ESL price tags shown as reference, see ESL guidelines document for attachment options.

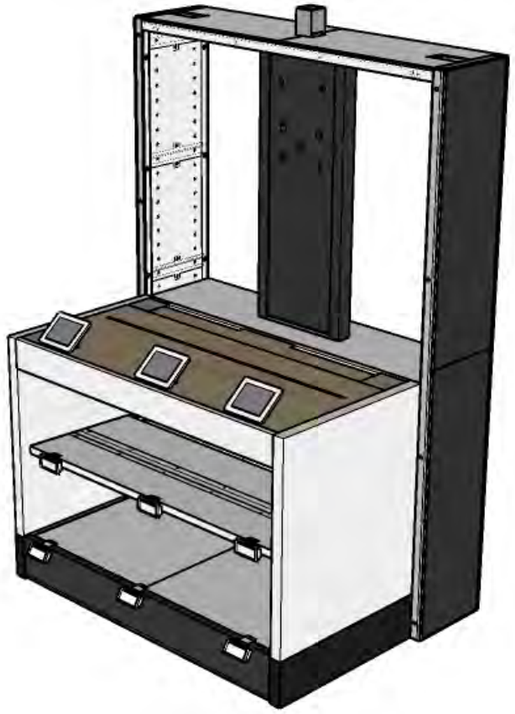

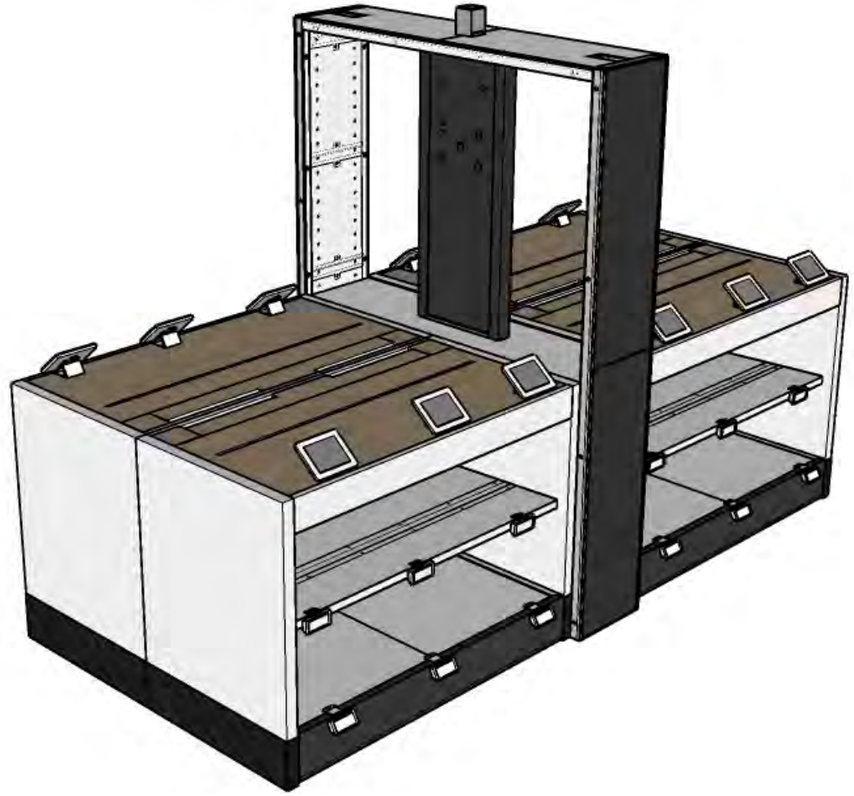

Last Updated August 12, 2026 8:20 AM | Best Buy partner and internal use only. Do not copy, publish, or distribute. The material in this document is confidential to Best Buy.

Headphones

Fixture Overview

The Display-Centric Base Case is a fixture system where all Headphones VPPs will be activated. It physically displays shrink-sensitive salable product beneath demos and displays on lowbay gondolas.

The display-centric fixture exists on both **standard** and **skinny** lowbay gondolas. Its design includes:

- Flexible components that fit both gondola types.
- Attachment channels and A/V pass-throughs that allow products to secure directly to the top of the fixture.
- Enhanced security and shrink-minimizing features.
- Channels in the locking case to hold a graphic insert. This graphic visually obscures the case when there is:
    - — No salable stock present.
    - — An elevated shrink risk.
    - — A desire for a greater graphic presence.

The Display-Centric Base Case can be merchandised side-by-side with older locking case designs.

**Drawings and models of all parts available upon request.*

Display-Centric Base Case
on Standard Lowbay Gondola

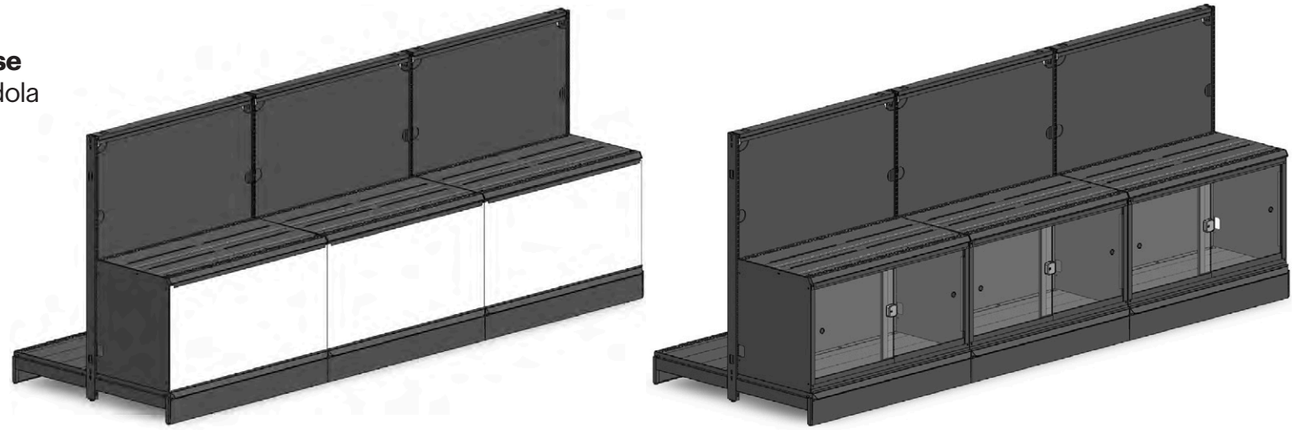

Display-Centric Base Case
on Skinny Lowbay Gondola

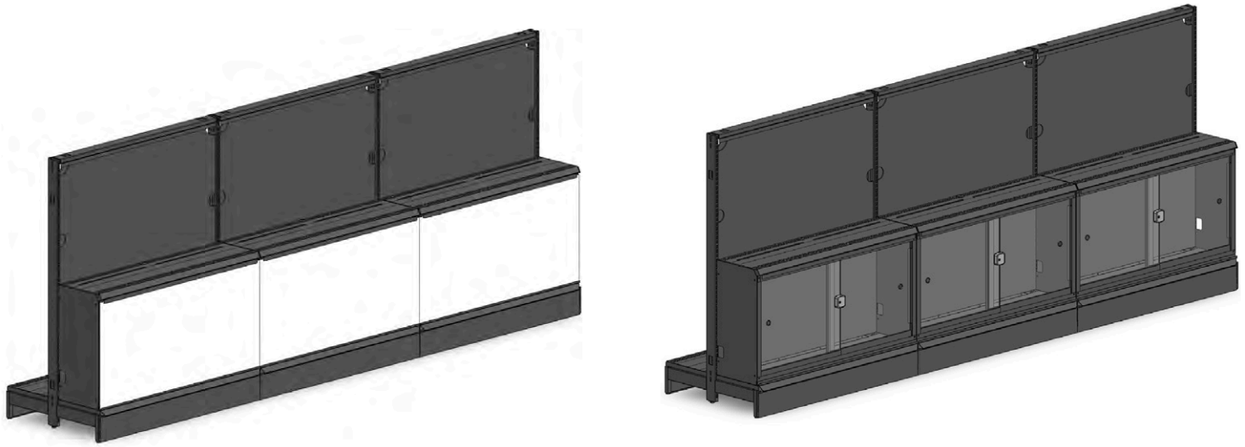

Note: *Each gondola type is shown with and without graphic inserts activated.*

Last Updated August 12, 2026 8:20 AM | Best Buy partner and internal use only. Do not copy, publish, or distribute. The material in this document is confidential to Best Buy.

VPP Overview

Vendor Requirements

- Display all display products, graphics and VPP components within the volumetric space permitted for each gondola type:

  Standard lowbay gondola — 47.938” W x 27.5” H x 21.875 D

  Skinny lowbay gondola — 47.938” W x 27.5” H x 11.875 D

- Create your presentation in 47.938 inch-wide segments, even if a presentation bleeds across multiple fixtures.
- Follow Best Buy’s power and electrical, technology, merchandising and graphics standards detailed in the following pages.

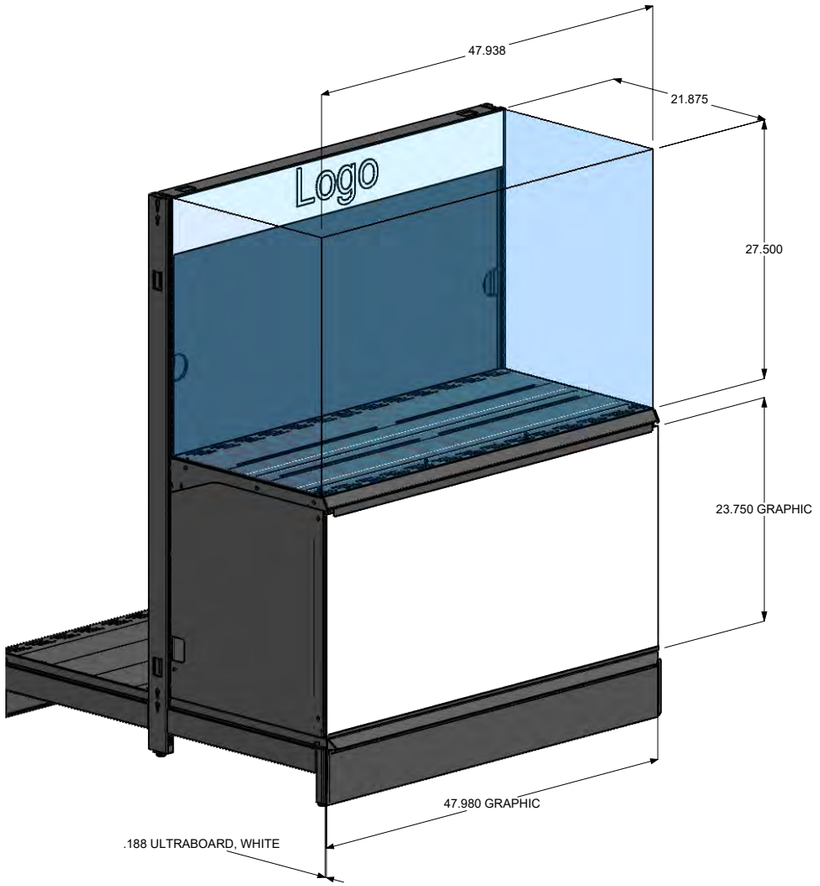

Standard Lowbay Gondola Dimensions

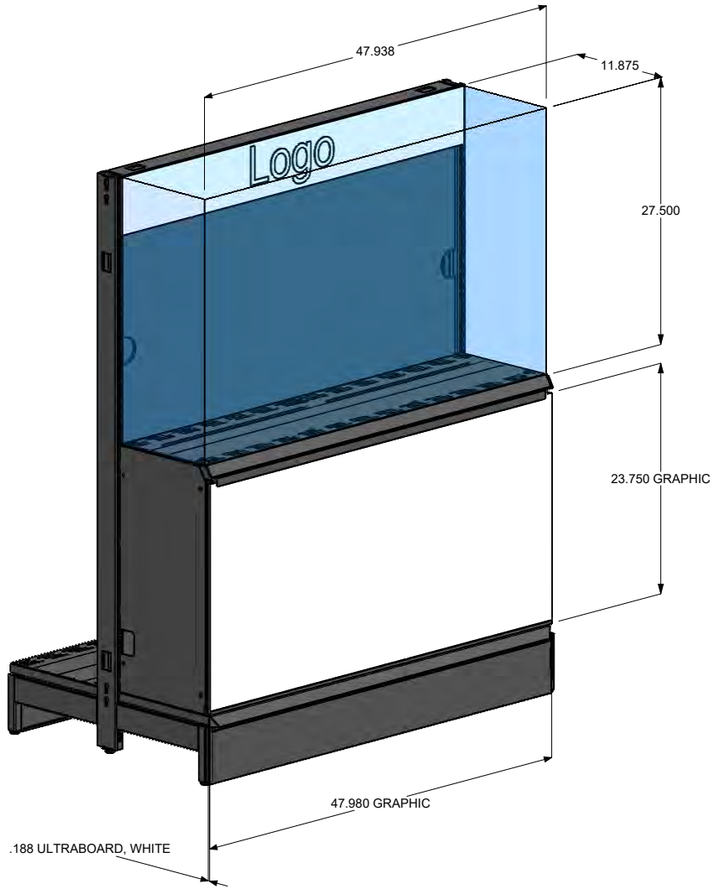

Skinny Lowbay Gondola Dimensions

Last Updated August 12, 2026 8:20 AM | Best Buy partner and internal use only. Do not copy, publish, or distribute. The material in this document is confidential to Best Buy.

Power and Attachments

Vendor Requirements

- Route power off the rear of the shelf, through the backer and into the base deck, where power access is provided.

  If you prefer to provide your own power strip, it must be UL listed and approved by Best Buy's Technology Design Lab. Contact the Lab for power access help.
- Use power cords that are at least 12' long to adequately reach the power strip.
- Label and color-code electronics. Ensure they can be accessed without the use of tools for easy replacement.
- Displays must be physically tethered to the shelf. **Preferred method:** Attach display to shelf's perforated pattern using threaded studs with washers and wingnuts.
- See drawings for detailed information on each gondola shelf's dimensions and unique perforated pattern.

Standard Gondola Shelves

BEST BUY SHELF DETAILS			MERCHANDISING AREA	
SHELF COMMON NAME	EPDM NUMBERS	FINISH	W (INCHES)	D (INCHES)
10.5" X 48"	1016891	BLACK	47.7	10.4
10.5" X 24"	1017727	BLACK	23.7	10.4
12" X 48"	1014797	BLACK	47.7	11.9
	1016889	WHITE		
12" X 24"	1017788	BLACK	23.7	11.9
	1022211	WHITE		
14" X 48"	1012248	BLACK	47.7	13.7
	1021561	WHITE		
	1008678	SILVER		
14" X 24"	1012247	BLACK	23.7	13.7
	1008677	SILVER		
18" X 48"	1012249	BLACK	47.7	17.7
	1021562	WHITE		
	1008683	SILVER		
18" X 24"	1012250	BLACK	23.7	17.7
	1008687	SILVER		
22" X 48"	1012251	BLACK	47.7	21.7
	1008693	SILVER		
22" X 24"	1012252	BLACK	23.7	21.7
	1008695	SILVER		

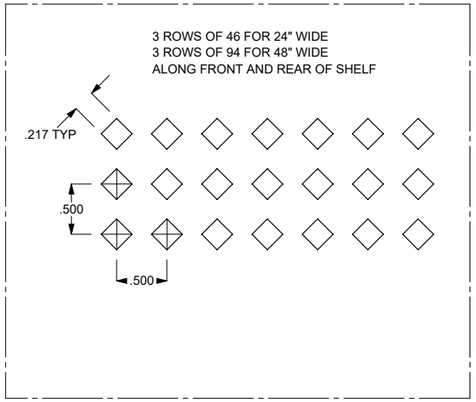

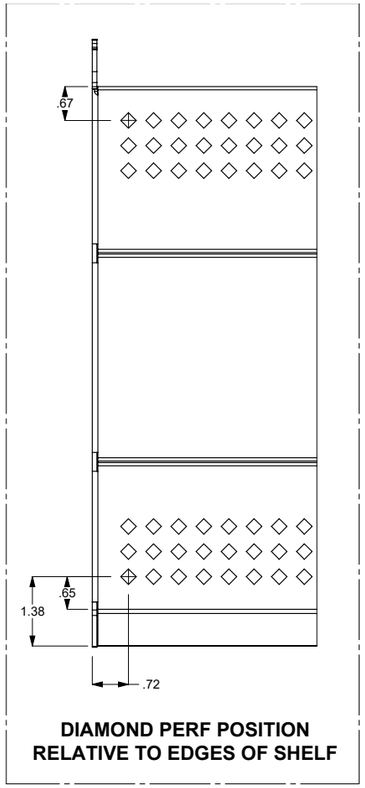

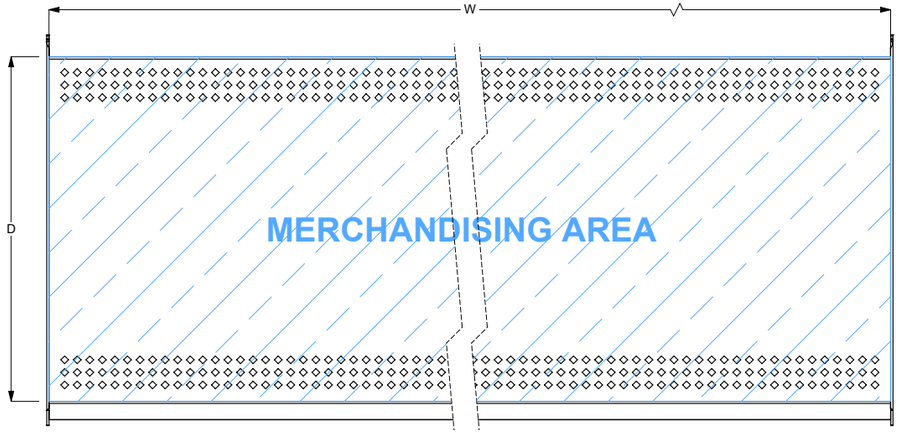

Last Updated August 12, 2026 8:20 AM | Best Buy partner and internal use only. Do not copy, publish, or distribute. The material in this document is confidential to Best Buy.

Power and Attachments

22” Deep Display-Centric Basecase Shelf

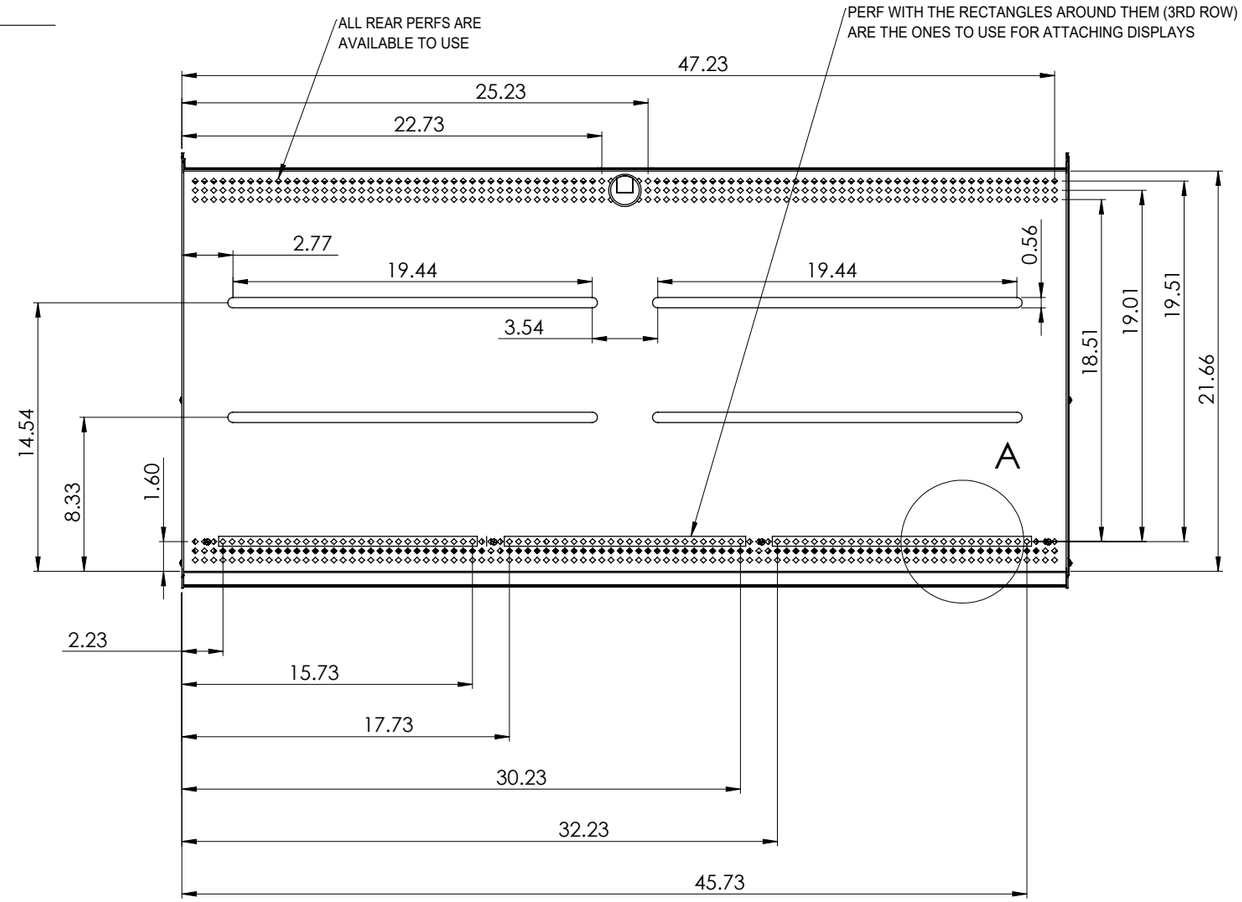

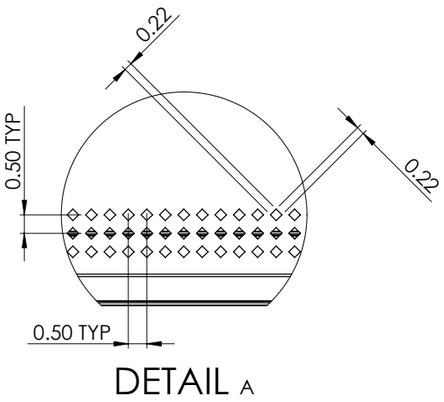

DETAIL A

Last Updated August 12, 2026 8:20 AM | Best Buy partner and internal use only. Do not copy, publish, or distribute. The material in this document is confidential to Best Buy.

Integrated Technology

Best Buy's Technology Design Lab must approve any working electrical components, including illuminated logos, media players, etc.

- **Illumination**

  Lit logos on headers and light emitted by display product and monitors are permitted. Additional lighting opportunities may exist for inline presentations 4' or wider. Connect with your Best Buy contact for details. Illumination must meet the luminosity requirements specified in the Technology Design Standards.

- **Buttons**

  Interactive buttons are permitted. They must be:

  — Duco DTPB-X-32 (the only approved button)

  — Surrounded by a white light-up ring

  — Shown with text that clearly defines the button action. Text must be:

    — Black, size 14, Human BBY Medium

    — Located below the button

    — Printed on the substrate (no decals)

You will need details in this guide on Partner Portal:

Technology Design Standards



Illumination

Lit logos and light emitted by display product and monitors are permitted.

Buttons

Buttons must follow Technology Design Lab standards

Last Updated August 12, 2026 8:20 AM | Best Buy partner and internal use only. Do not copy, publish, or distribute. The material in this document is confidential to Best Buy.

Graphics

Vendor Requirements

- Provide graphics for your presentation, complying with all copy, design, size, substrate, etc. requirements.
- Include your logo within the top 6” of your display.
- Include in your collateral a directive for product fulfillment.

Examples:

Scan price tag QR codes to:
- Get product info
- Check availability
- Get expert help
- Send to Order Pickup

Scan price tag QR codes to send to Order Pickup.



You will need details in this guide on Partner Portal:

Copy & Claims Guidelines

Last Updated August 12, 2026 8:20 AM | Best Buy partner and internal use only. Do not copy, publish, or distribute. The material in this document is confidential to Best Buy.

Graphics

Vendor Requirements

- Include in your collateral a graphic insert that can be activated in front of the locking case.

  Graphic Insert

  Size: 47.98” W x 23.75” H

  (***Note:*** *Vendors may bleed a single image across multiple insert segments if they are managed/operated by a single party.)*

  Substrate: .1875 Ultraboard, white

  Content: Lifestyle imagery of humans interacting with products.

  Crop: Humans and products largely centered, with products clearly visible.

- Choose from the following alternate content options ***only*** if lifestyle imagery of humans and products isn’t available or allowed:

  — Lifestyle imagery of products ***without*** humans.

  — Hero product imagery on a neutral color field.

  Note: *Copy on the base case graphic is not permitted. Ensure that all copy within other activatable areas follow the guidelines.*

Priority:
Lifestyle imagery of humans interacting with products.



Alternate 1:
Lifestyle imagery of products without humans.

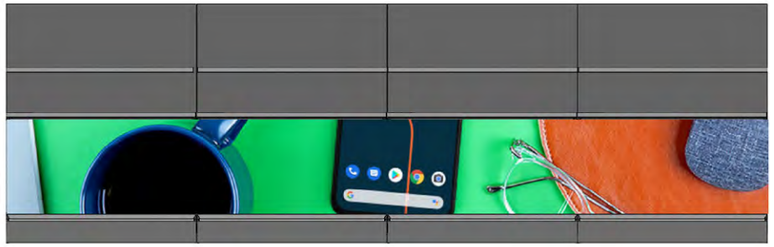

Alternate 2:
Hero product imagery on a neutral color field.

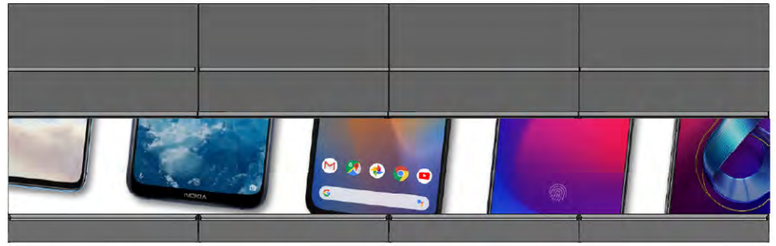

Last Updated August 12, 2026 8:20 AM | Best Buy partner and internal use only. Do not copy, publish, or distribute. The material in this document is confidential to Best Buy.

Merchandising Expectations

Vendor Requirements

- Display products and signage within the volumetric space permitted for each gondola type (shown at right).
- Design your display components with modularity in mind to ensure easy replacement when products change.
- Include your choice of Demo, Display or Dead Mock Display product(s).
  - — **Demo:** An out-of-box product feature that allows for an interactive experience.
  - — **Display:** A non-interactive product included to showcase materiality, form factor, colorways and sizing.
  - — **Dead Mock Display:** A non-interactive 3D model of salable product intended to showcase form factor, colorways and sizing.

Note: *Printed representational stand-ins of products are not permitted.*

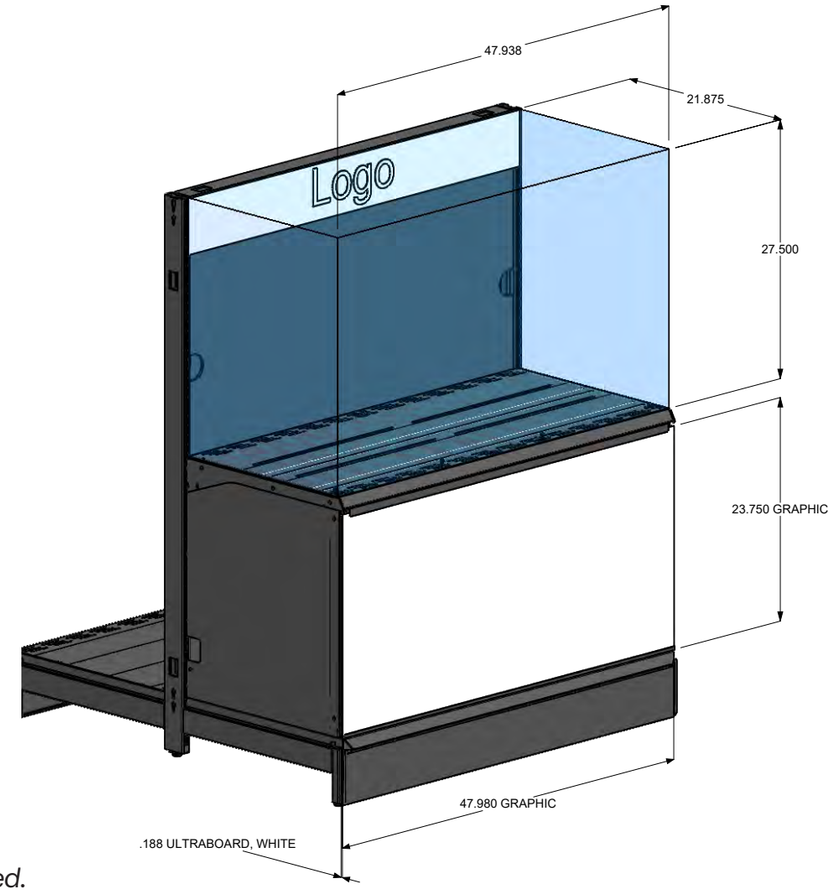

Standard Lowbay Gondola Dimensions

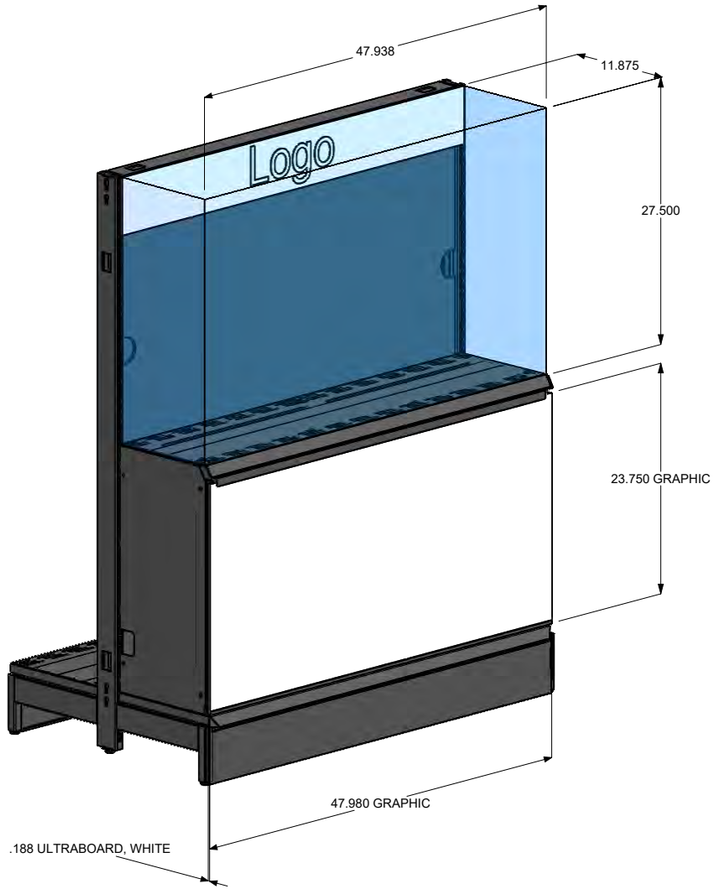

Skinny Lowbay Gondola Dimensions

Last Updated August 12, 2026 8:20 AM | Best Buy partner and internal use only. Do not copy, publish, or distribute. The material in this document is confidential to Best Buy.

Merchandising Best Practices

Consider these best practices when designing your display:

- Practice waterfall merchandising, with non-interactive display products merchandised above demo units.
- Let your product be the hero of the presentation and don't crowd with graphics or copy.
- Use negative space to draw customer attention to the products on display.

Best Buy's wedge component (highlighted at right) offers an accommodating base for your presentation. Its flexible design fits both standard and skinny gondolas.

If you're interested in incorporating the wedge into your display, ask your Best Buy contact for a list of preferred vendors who can manufacture the part.

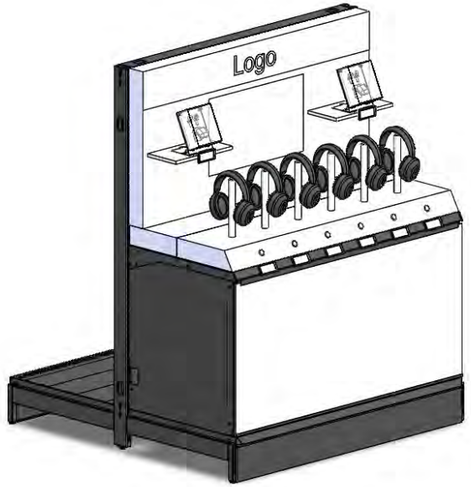

Standard Lowbay Gondola Application

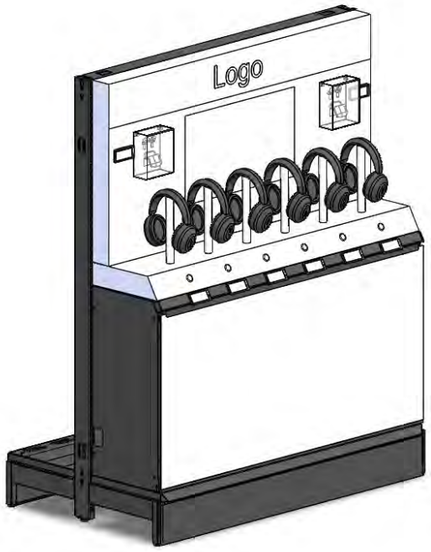

Skinny Lowbay Gondola Application



Display

Non-interactive product included to showcase materiality, form factor, colorways and sizing.

Demo

Display products out of the box and powered to allow customer interaction.

Last Updated August 12, 2026 8:20 AM | Best Buy partner and internal use only. Do not copy, publish, or distribute. The material in this document is confidential to Best Buy.

Next Steps

1 READ

the following from Partner Portal for details and dimensions **you will need**:

Technology Design Standards | **ESL Pricing**

Additional useful guides:

Copy & Claims Guidelines

2 REQUEST

from your Best Buy contact:

- Drawings and models of parts you want to order. Provide the part numbers and specify Solidworks or STEP file type.
- A list of preferred vendors who can manufacture the fixture parts.

Last Updated August 12, 2026 8:20 AM | Best Buy partner and internal use only. Do not copy, publish, or distribute. The material in this document is confidential to Best Buy.

Highly Visible Fixture Expectations

Overview

Customers have told us our in-store experience is key to their satisfaction. To ensure we deliver a best-in-class experience, we've outlined a checklist of success criteria that must be met for highly visible displays residing in prominent locations.

Much like our Brand Standards, these success criteria are a clear set of expectations that enable us to create an in-store experience that consistently aligns with the company brand and delivers against our goal of making it worth the trip, every time, for our customers.

Success criteria help ensure our most prominent locations feature must-win product presentations. These presentations are visible to all customers—regardless of their shopping journey—define expectations for the rest of the store, and establish trust and credibility.

This document will help internal partners in the negotiation, design and auditing of the most highly visible POGs within our stores.

Our success criteria apply to:

- Convergence Zone
- Theater District
- Tables and gondolas visible from the store entrance
- Endcaps facing the racetrack
- Perimeter wall fixtures
- Presentations on any fixture that exceeds 60"H

Vendors must meet inventory expectations before deployment and sustain available inventory after.



Convergence Zone

- Used for new and exciting product



Perimeter Wall



Theater District

- 18-month maximum vendor occupancy
- Used for new and exciting product



Endcap



Side Stock Endcap

Last Updated August 12, 2026 8:20 AM | Best Buy partner and internal use only. Do not copy, publish, or distribute. The material in this document is confidential to Best Buy.

Success Criteria

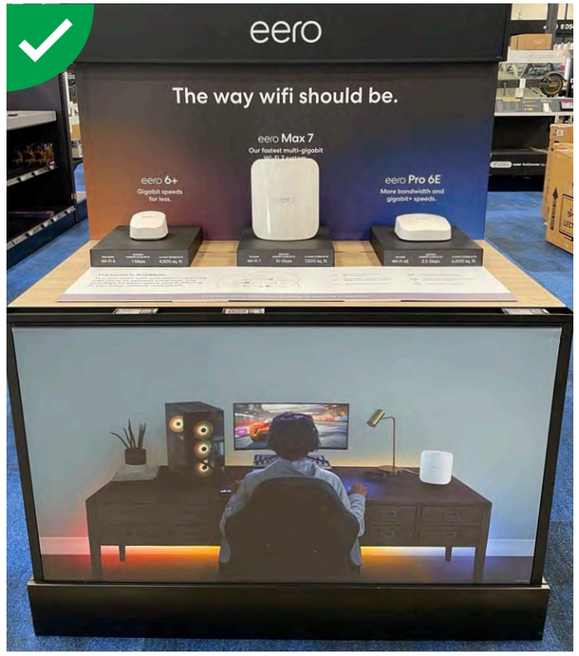

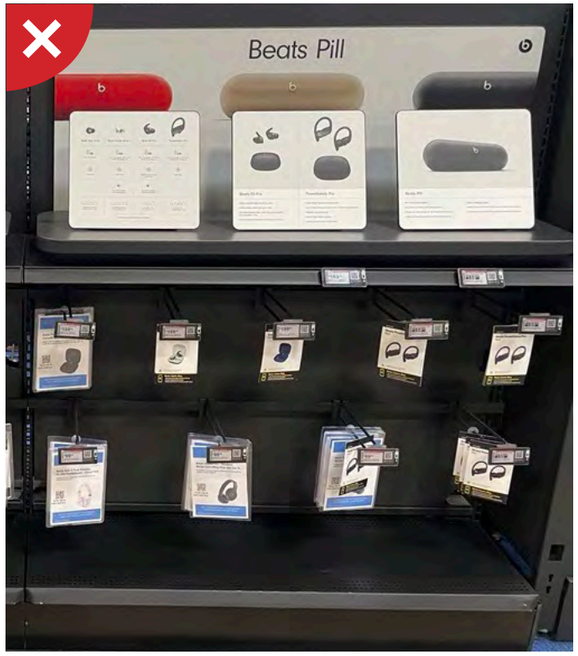



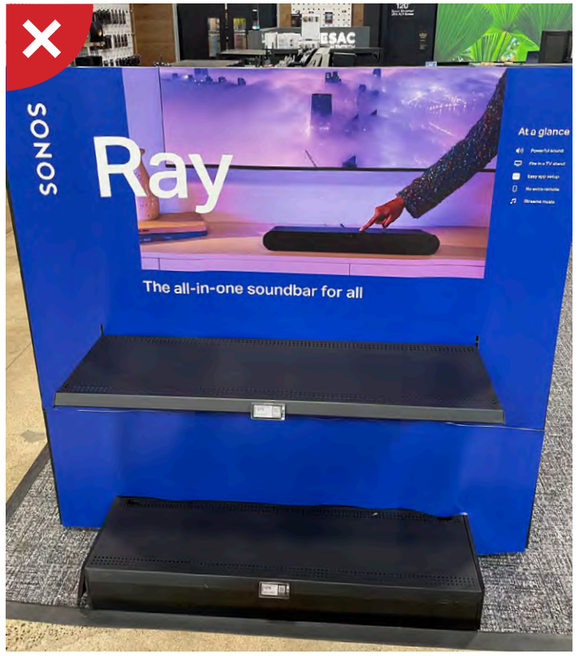

Display your choice of hero product.

- **Demo:** Out-of-box product providing an interactive experience.
- **Display:** Non-interactive product showing materiality, form factor, colorways and sizing.
- **Dead Mock Display:** Non-interactive 3D model of salable product showing form factor, colorways and sizing.

Printed representational stand-ins of products are not allowed. Product availability cards require approval and are permitted on a case-by-case basis.

Design your display to be full and confident.

Think through immediate and future strategies for how you will showcase product and present an abundant display even if faced with dips in inventory.

Choose a fixture that balances your presentation style, the product size/quantity and our Product Retention Standards. For example, display-centric presentations with limited box stock can still appear complete on a Side Stock Endcap fixture.

Last Updated August 12, 2026 8:20 AM | Best Buy partner and internal use only. Do not copy, publish, or distribute. The material in this document is confidential to Best Buy.

Success Criteria



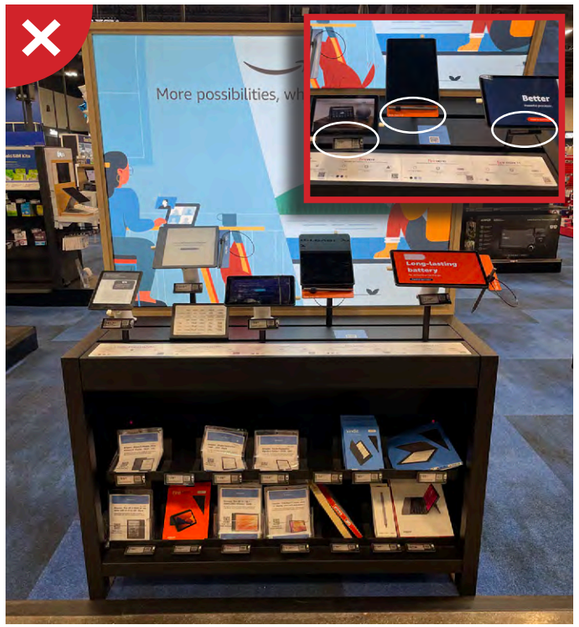

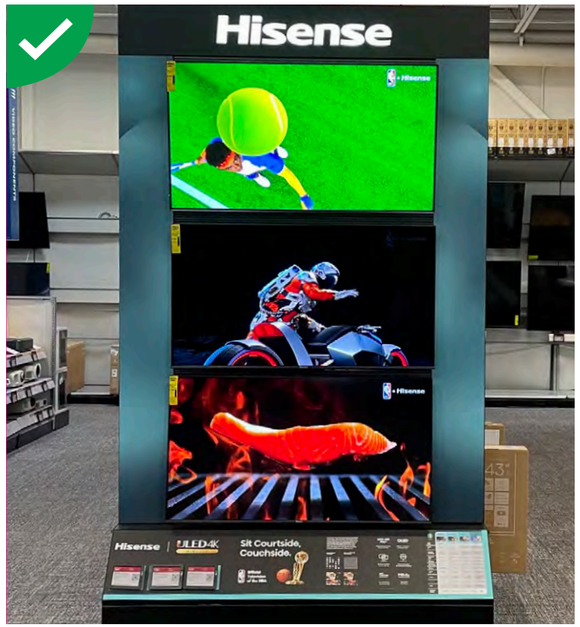

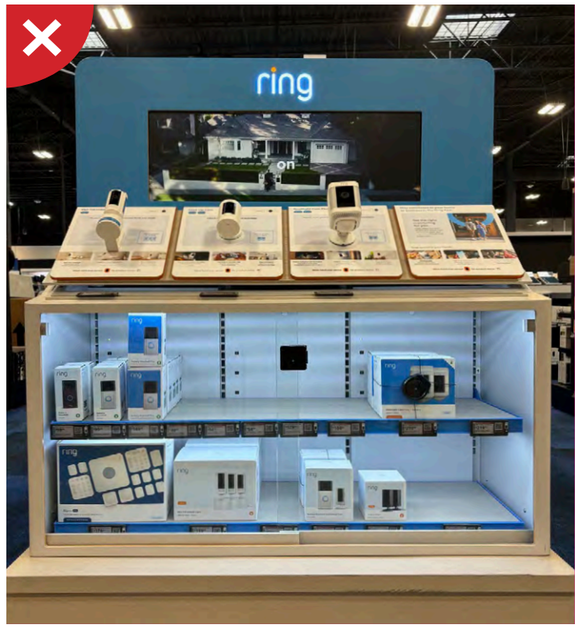

Include an ESL for every SKU.

Use a Peg Label ESL **or** Fact Tag ESL (ask your BBY contact which to deploy) for **all** display and box stock SKUs. Ensuring our ESL pricing is accurate and functional is an easy and important way to earn our customers' trust.

Attach ESLs to gondolas with Best Buy's acrylic attachment parts whenever possible. For Peg Label ESLs, prioritize using the Extrusion, Peg Label Holder–Rail (Part #1005391). Position the ESL with your product to ensure visibility and ADA compliance. Do not let a product obstruct a customers' view of the ESL.

Use permitted lighting to enhance your display.

- **Inline fixtures:** Lit logos on headers and light emitted by display products and monitors *are permitted*. Additional lighting opportunities may exist for inline presentations 4' or wider. Connect with your Best Buy contact for details.

- **Endcap fixtures:** Uplighting, fixture edge soft ambient lighting, lit logos on headers, and light emitted by display products and monitors *are permitted*. All other forms of lighting *are not permitted*.

Lights must have a color temperature of 5,500K and be 5,000 Lux brightness or less. They must never distract from the product or result in eye strain.

Last Updated August 12, 2026 8:20 AM | Best Buy partner and internal use only. Do not copy, publish, or distribute. The material in this document is confidential to Best Buy.

Success Criteria

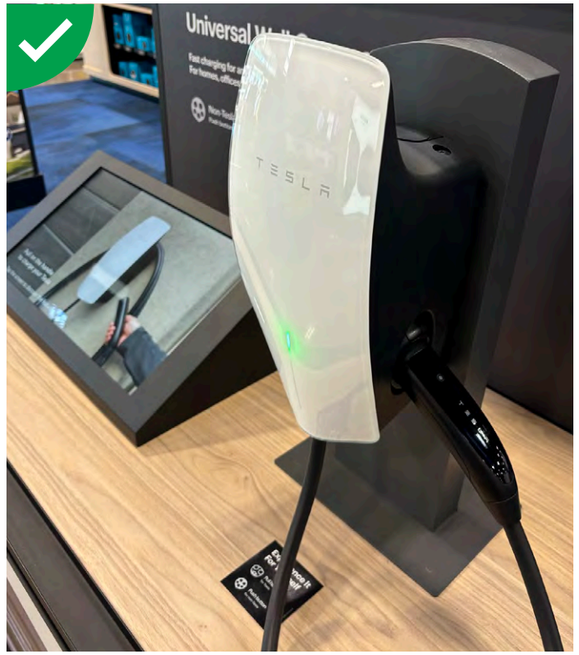

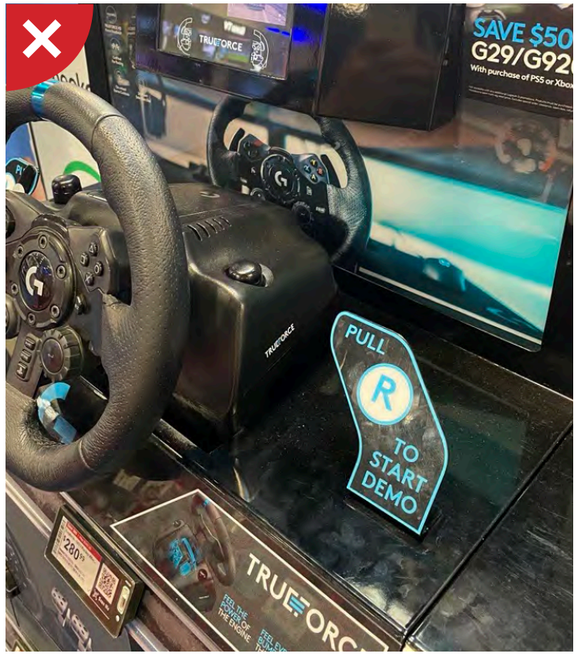

Prioritize cleanliness.

Presentations must be built with easily maintainable surfaces and materials that resist dirt, smudges and fingerprints. A clean and bright store provides an enticing, safe and organized environment.

A customer's perception of a clean and well-organized space is, "This display encourages me to physically engage, showcases the prestige of the product and gives me confidence that a product I purchase will work."

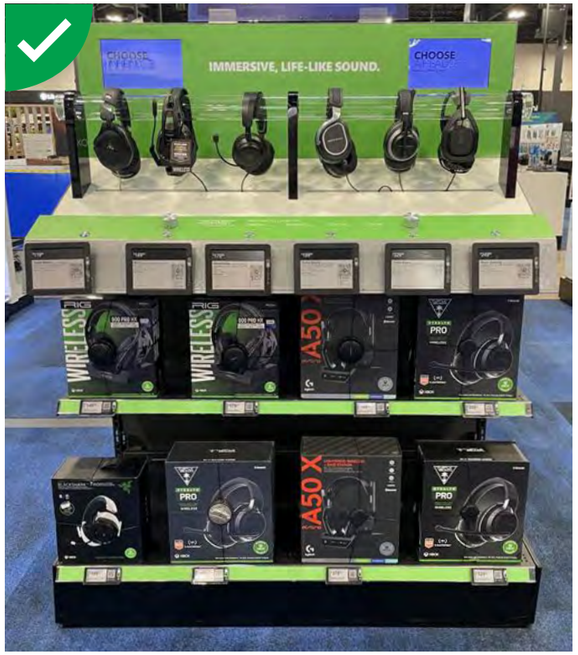

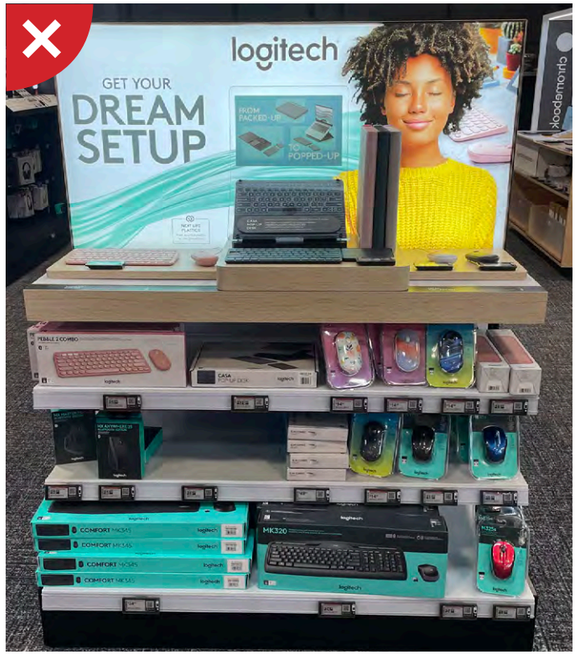

Merchandise all salable box stock as front-facing.

Help customers easily and successfully shop your display by clearly showing the front of your product packages. Package sides, spines and bottoms should not face outward on shelves ***unless*** these surfaces feature graphics and copy that depict the product just as thoroughly as the front.

Last Updated August 12, 2026 8:20 AM | Best Buy partner and internal use only. Do not copy, publish, or distribute. The material in this document is confidential to Best Buy.

Success Criteria

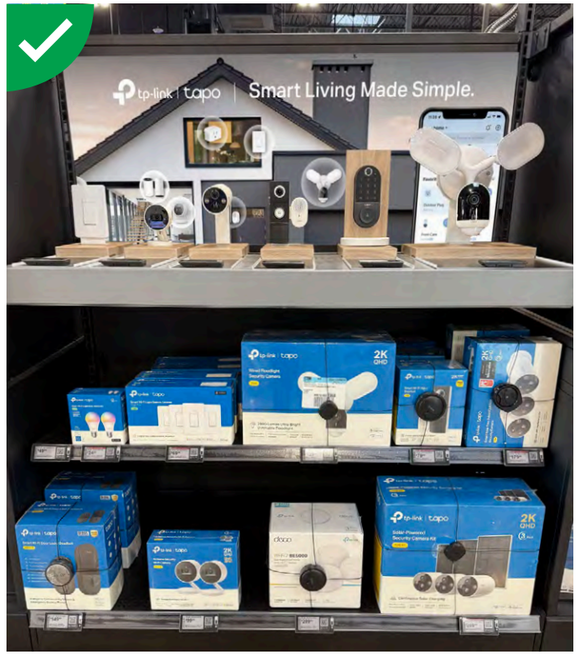



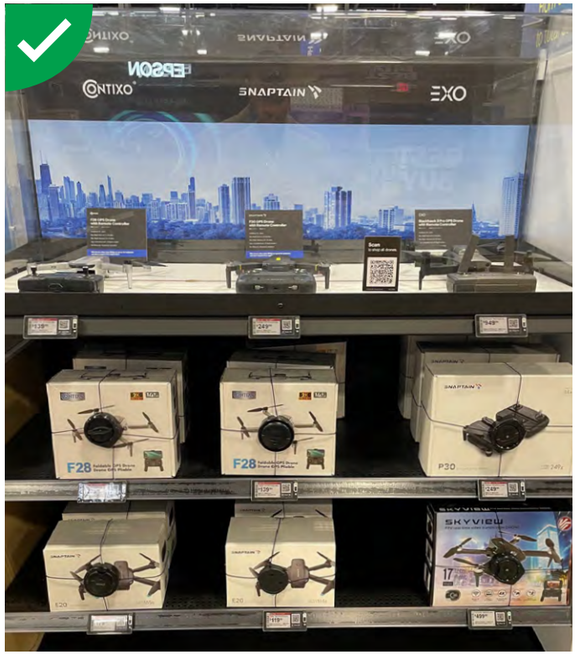

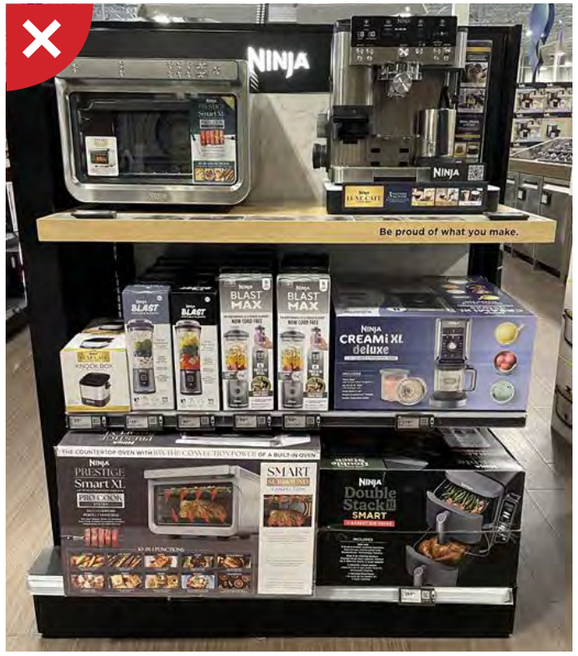

Choose one appropriate security method.

Refer to the Product Retention Standards and consult with the Retail Operations Asset Protection Strategy team to determine how to secure salable stock:

1) Spider wraps or plastic cases. Products on the sales floor are easily accessible for customers to self-fulfill by bringing to checkout.

2) Lockup cases or shark cages. Customers see products, but must use QR codes to send a product to Order Pickup or ask a Blue Shirt for help.

Note: Products that require security may reside on the same fixture as products that don't. See the PRS for details. Connect with Retail Ops for additional support.

Tell a cohesive product story.

Attract customers with products that share a common focus to ensure the presentation is understandable at a glance.

A successful presentation might highlight variations among similar products (see left photo above) or consist of a display product on the top shelf, related box stock below and supporting accessories on the base deck.

Last Updated August 12, 2026 8:20 AM | Best Buy partner and internal use only. Do not copy, publish, or distribute. The material in this document is confidential to Best Buy.

Success Criteria

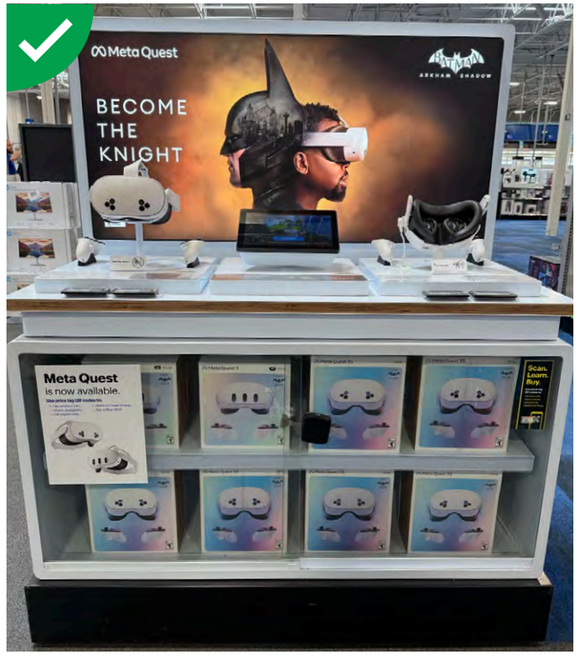

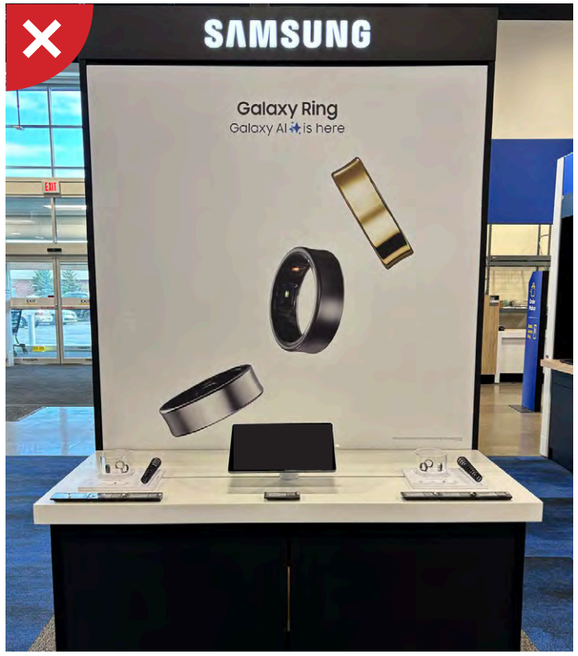

Provide clear directions for product fulfillment.

If your presentation includes display-only, locked up, or otherwise inaccessible product, include messaging that tells customers how to buy. Best Buy's "Scan. Learn. Buy." signage is available upon request, but vendors should plan to supplement with their own collateral.

Example message: *Scan price tag QR codes to send product to Order Pickup.*

Last Updated August 12, 2026 8:20 AM | Best Buy partner and internal use only. Do not copy, publish, or distribute. The material in this document is confidential to Best Buy.

Home Theater H-Wall

Fixture Overview

The H-Wall fixture is a unique fixture within the Home Theater department that serves as a backdrop for vendor activations. Activations can take place inline and on endcaps. All activations should be freestanding as there is no basedeck for this fixture.

To maintain consistency across formats, vendors are required to design activations that are fully compatible with all formats.



Last Updated August 12, 2026 8:20 AM | Best Buy partner and internal use only. Do not copy, publish, or distribute. The material in this document is confidential to Best Buy.

Inline Fixture Specifications

Size: 24”D x 60”H x (width can vary)
Note: *Merchandisable width can vary, please partner with your Best Buy contact for details. Maximum width is 90”.*

Core

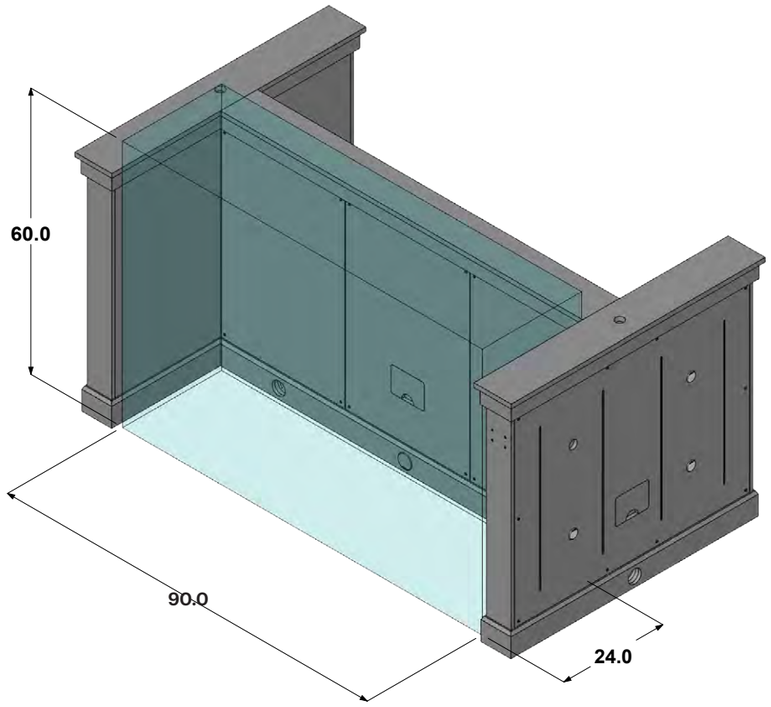

Large Format

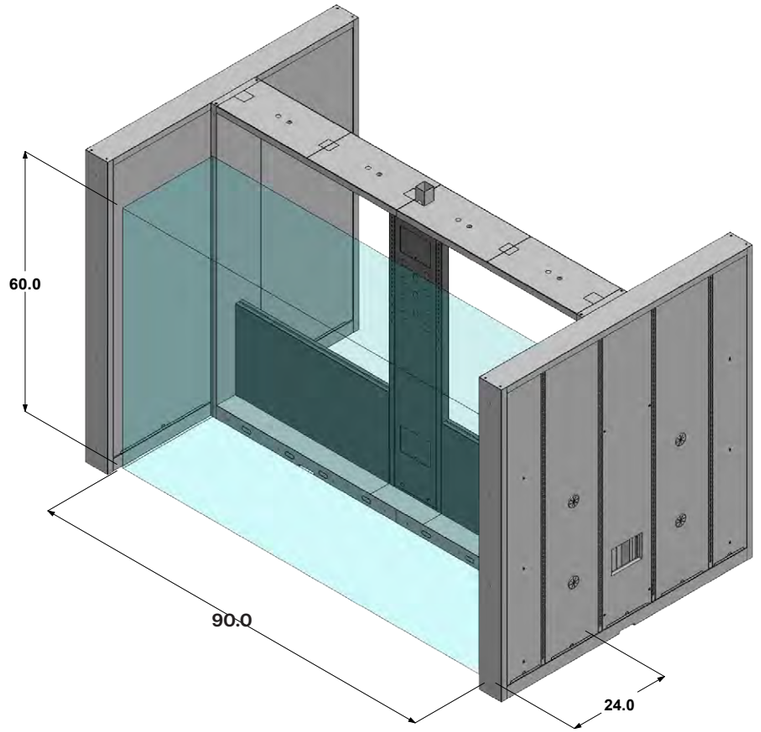

Last Updated August 12, 2026 8:20 AM | Best Buy partner and internal use only. Do not copy, publish, or distribute. The material in this document is confidential to Best Buy.

Endcap Fixture Specifications

Size: 24”D x 60”H x 61.5”W
Note: *Select totem stores have a small basedeck on the fixture that may require further design considerations, please partner with your Best Buy contact for details.*

Core

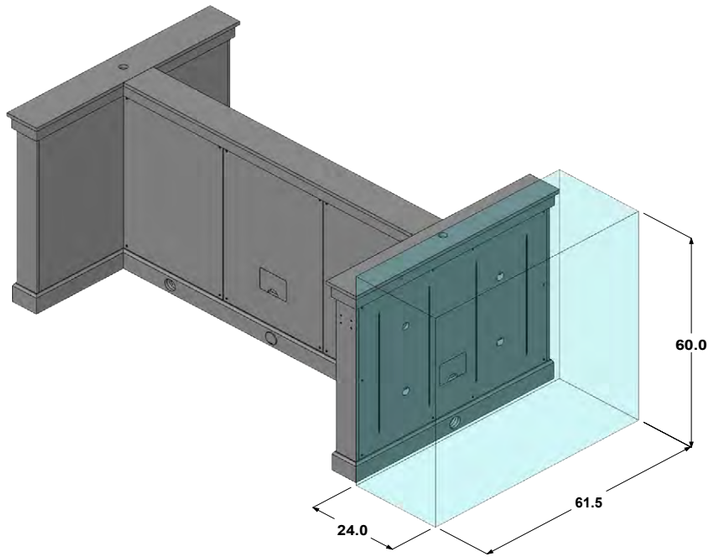

Large Format

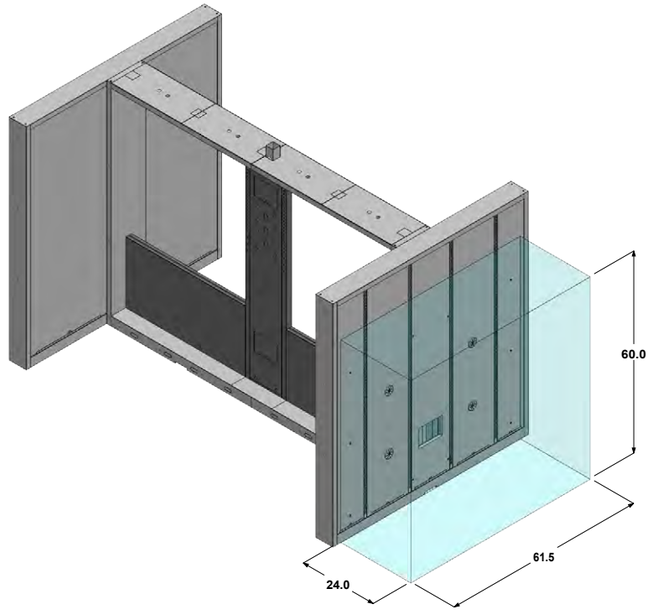

Totem

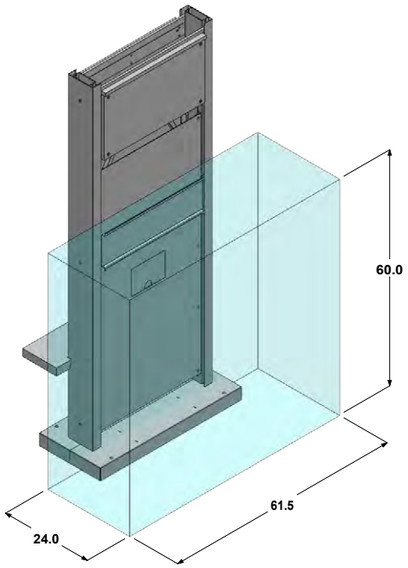

Last Updated August 12, 2026 8:20 AM | Best Buy partner and internal use only. Do not copy, publish, or distribute. The material in this document is confidential to Best Buy.

Merchandising

- Due to the unique nature of this fixture, vendors are required to supply any and all additional fixtures to complete their presentation. The H-Wall fixture serves as a backdrop only.
- VPPs should not extend wider than fixture edges. VPP depths should be no deeper than 24” in order to comply with ADA.
  Note: *TV monitors may extend above the fixture, up to a maximum height of 68”.*
- Support all products with a proximally located peg label-sized Electronic Shelf Label (ESL).
- Design modular display components to ensure easy replacement when products change.
- Include your choice of Demo, Display or Dead Mock Display product(s).
  — **Demo:** An out-of-box product feature that allows for an interactive experience.
  — **Display:** A non-interactive product included to show materiality, form factor, colorways and sizing.
  — **Dead Mock Display:** A non-interactive 3D model of salable product intended to show form factor, colorways and sizing.

Note: *Printed representational stand-ins of products are not permitted.*

Find more details and dimensions in these guides on Partner Portal:

QR Code Guidelines **Copy & Claims Guidelines**

Graphics

- Ensure the product serves as the hero of the presentation; all signage should act in support.
- Include your logo in the uppermost 6” of your display.
  Note: *Preferred style is a white illuminated logo centered on a black horizontal header. If you choose to illuminate your logo, consider using Best Buy’s logo header and light panel (see page 5 for part numbers).*
- Ensure all graphics comply with requirements for copy, design, size, etc.
- Include, if desired, one printed QR code per every four linear feet of vendor presentation. See our QR Code Guidelines for details.

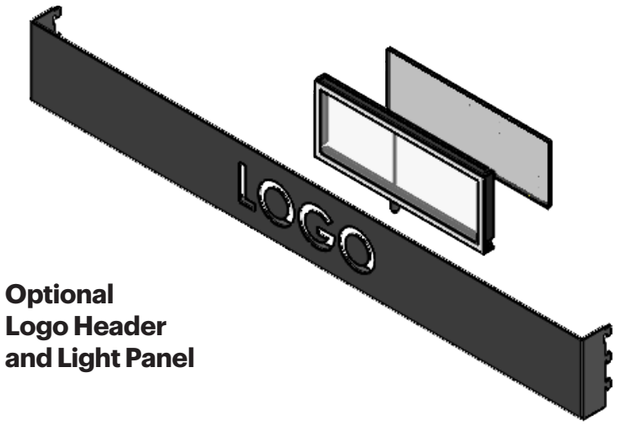

Optional Logo Header and Light Panel

Last Updated August 12, 2026 8:20 AM | Best Buy partner and internal use only. Do not copy, publish, or distribute. The material in this document is confidential to Best Buy.

Integrated Technology

Integrated technology must align with the Technology Design Standards on Partner Portal. Best Buy's Technology Design Lab must approve any working electrical components, including illuminated logos, media players, etc.

Lighting

- Permitted lighting options include uplighting, shelf lighting, backlighting, soft ambient lighting along fixture edges, illuminated logos on headers, and light emitted from display products and monitors.
- Downlighting and all other forms of lighting *are not permitted*.

Buttons

- Interactive buttons are permitted as follows:
  - — Duco DTPB-X-32 (only approved button)
  - — Surrounded by a white light-up ring
  - — Shown with text that clearly defines the button action. Text must be:
    - — Black, size 14, Human BBY Medium
    - — Located below the button
    - — Printed on the substrate (no decals)

Find more details and dimensions in these guides on Partner Portal:

Technology Design Standards

Power and Attachments

Vendor Expectations

- Route power cords (12'L minimum) through the 6"x8" access panel on the back of the fixture.
- Ensure your electronics are labeled, color-coded and accessible without tools for easy replacement.
- Vendor provided fixture components are permitted to and should stand alone. They do not need to attach to the H-Wall.

  Note: *The ability to attach to the host fixture may be available in some stores, please partner with your Best Buy contact for details.*
- Ensure your product is securely attached to your fixtures or to a display that's attached to your fixture. This will prevent product from falling over or being taken.

Last Updated August 12, 2026 8:20 AM | Best Buy partner and internal use only. Do not copy, publish, or distribute. The material in this document is confidential to Best Buy.

Home Theater Vendor Home

Overview

Home Theater Vendor Homes invite vendors to create an immersive viewing experience within an allotted floor pad and on the flanking perimeter wall.

The prototypical activation area consists of a 20’ x 20’ floor pad and 24’ wall space.

Note: *Ask your Best Buy contact to see your available space based on the specific prototype.*

Vendor Expectations

- Keep all fixtures at least 6” from the edge of the floor pad to accommodate navigation.
- If your Vendor Home is new (not replacing an existing pad), ask your Best Buy contact for additional conversions and details about available space.
- Ensure floor pad fixtures and signing elements are no taller than 72”H.
  - — Product may protrude selectively above 72” in height to enable demo experiences.
- Ensure space and fixtures are ADA-compliant.
  - — GCA & IBC Code require aisles serving elements (“architectural components”) to be at least 48”W.

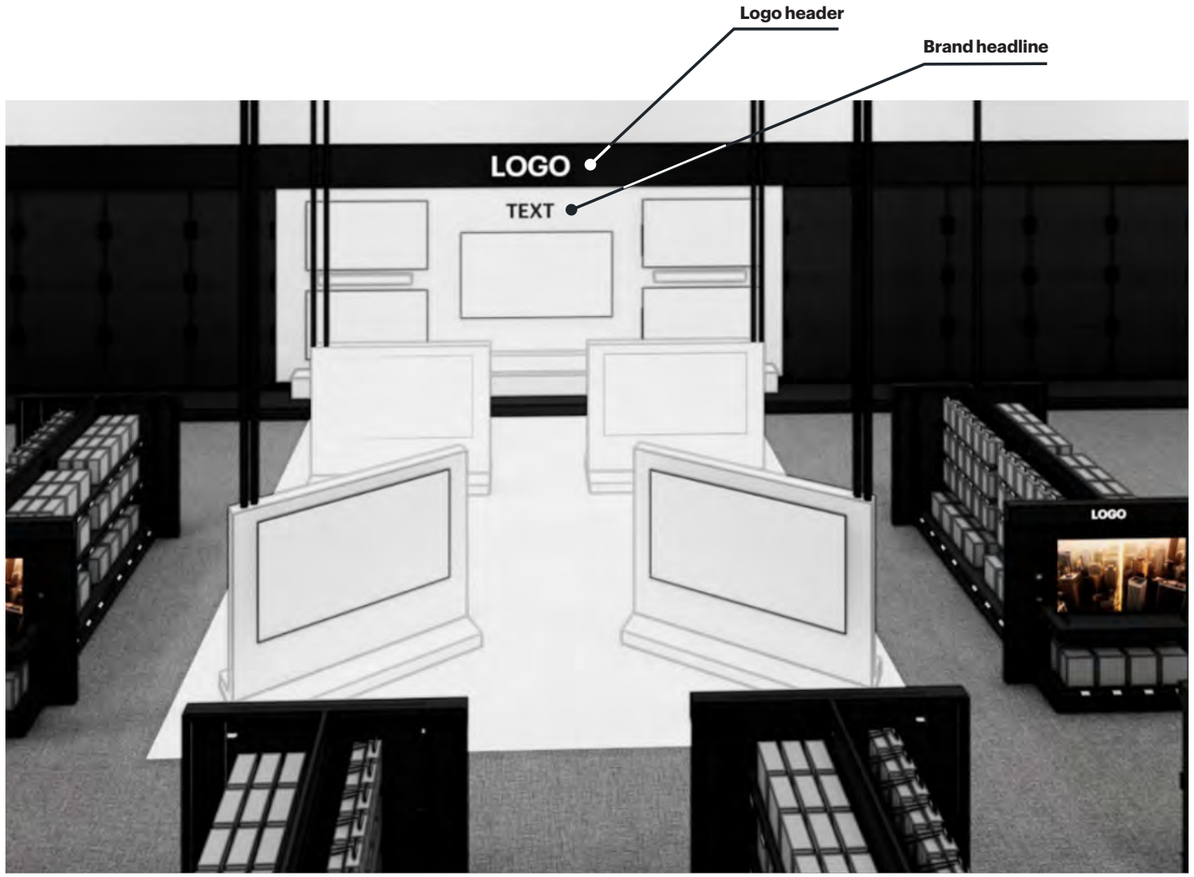

Note: *A flooring transition is not required, but if desired, carpeting is preferred.*

Last Updated August 12, 2026 8:20 AM | Best Buy partner and internal use only. Do not copy, publish, or distribute. The material in this document is confidential to Best Buy.

Fixture Overview

Vendor Expectations

- Contain all fixtures and signage within the 20’ x 20’ floor pad and flanking perimeter wall, creating a cohesive program across both spaces.
- Ensure floor pad fixtures are no taller than 72”H (including graphics and fixture add-ons).
- Keep all fixtures at least 6” from the edge of the floor pad to accommodate navigation.
- Ensure fixtures don’t distract from or diminish the visual impact of the product.
    - — If using backer panels in your display, leverage neutral colors and textures.
- Ensure all fixture components are ADA-compliant with at least 4’ of clearance to accommodate navigation.
- Make your fixtures configurable to allow for impedances such as support columns, etc.

Best Practices

- Consider incorporating an optional durable toe kick.

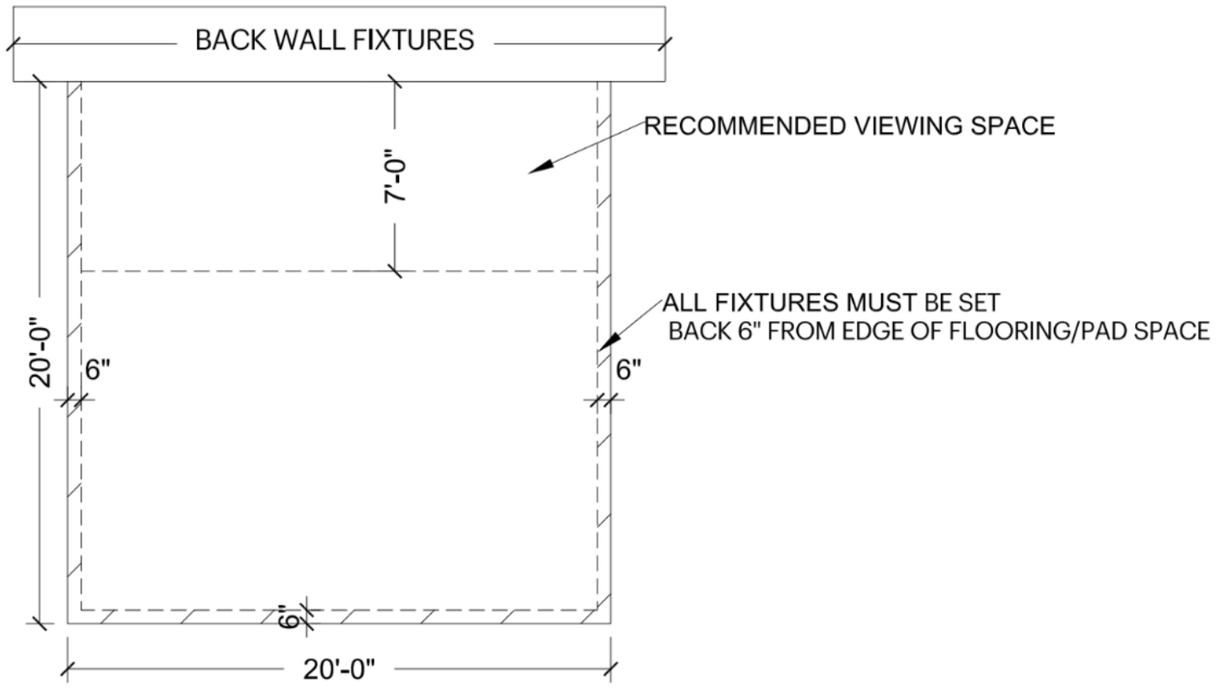

Last Updated August 12, 2026 8:20 AM | Best Buy partner and internal use only. Do not copy, publish, or distribute. The material in this document is confidential to Best Buy.

Layout Considerations

Full Home Theater Vendor Home

Note: *Pad size varies due to building constraints. Ask your Best Buy contact for your exact available space.*

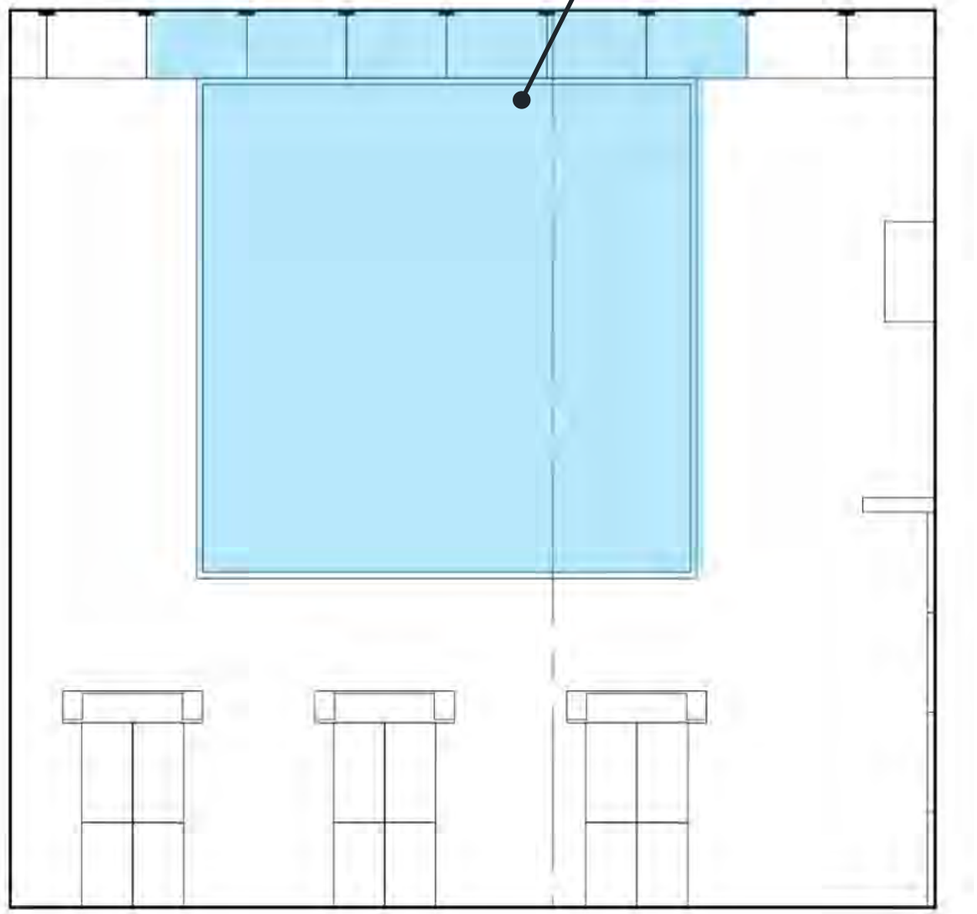

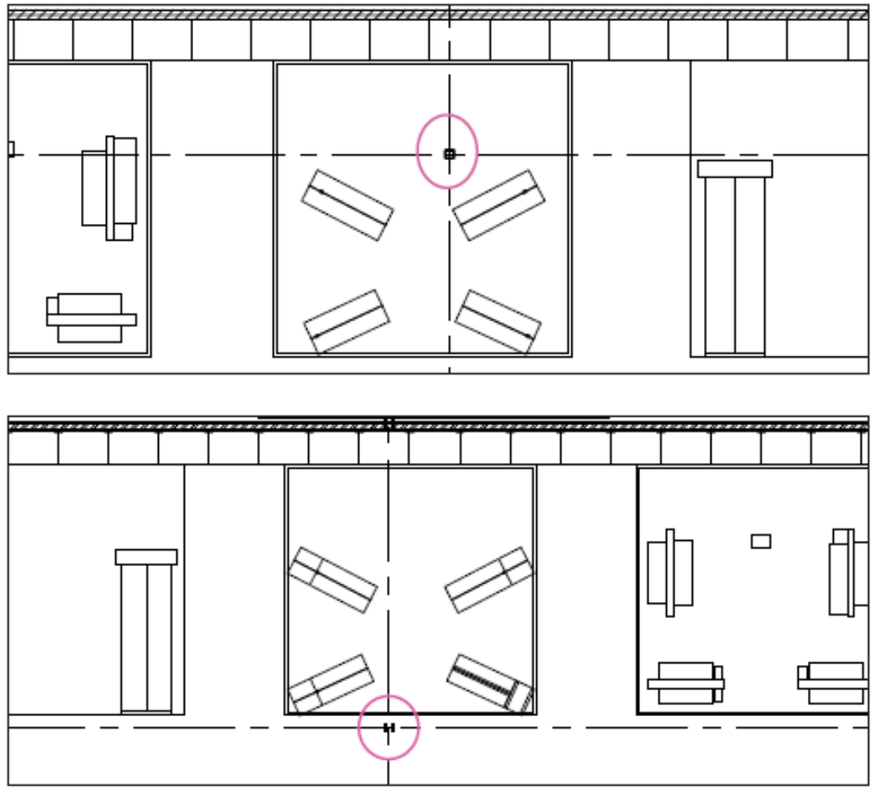

Note: *Consider configurable alternate layouts to allow for impedances such as support columns, etc.*

Last Updated August 12, 2026 8:20 AM | Best Buy partner and internal use only. Do not copy, publish, or distribute. The material in this document is confidential to Best Buy.

Power and Attachments

Vendor Expectations

- Powered perimeter wall fixtures, components and products must be powered through the wall.
- Powered floor pad fixtures must be compatible with Best Buy's 2" x 2" fixture drops and Connectrac.
  Note: *Depending on power and data requirements, multiple fixture drops may be needed. Connectrac may be used as an alternate power routing method from walls to floor pad fixtures, however, provisions must remain to route power from the ceiling via fixture drops.*
- Vendors must use Best Buy's logo header system.
  — Logo lettering must be 12"H and centered within the 24"H header.
- Fixtures and products on the perimeter wall must attach via the vertical uprights. (See Slotted Vertical Upright Vendor Guidelines for details.)

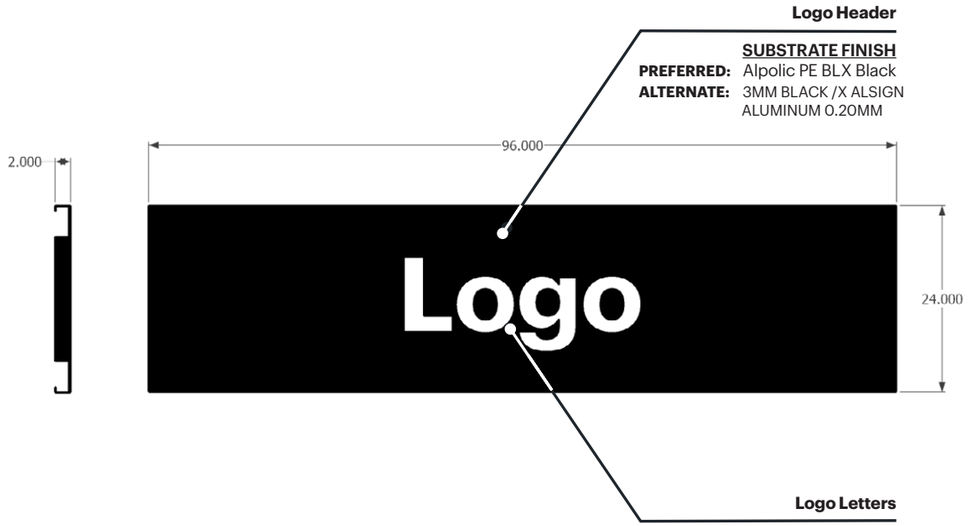

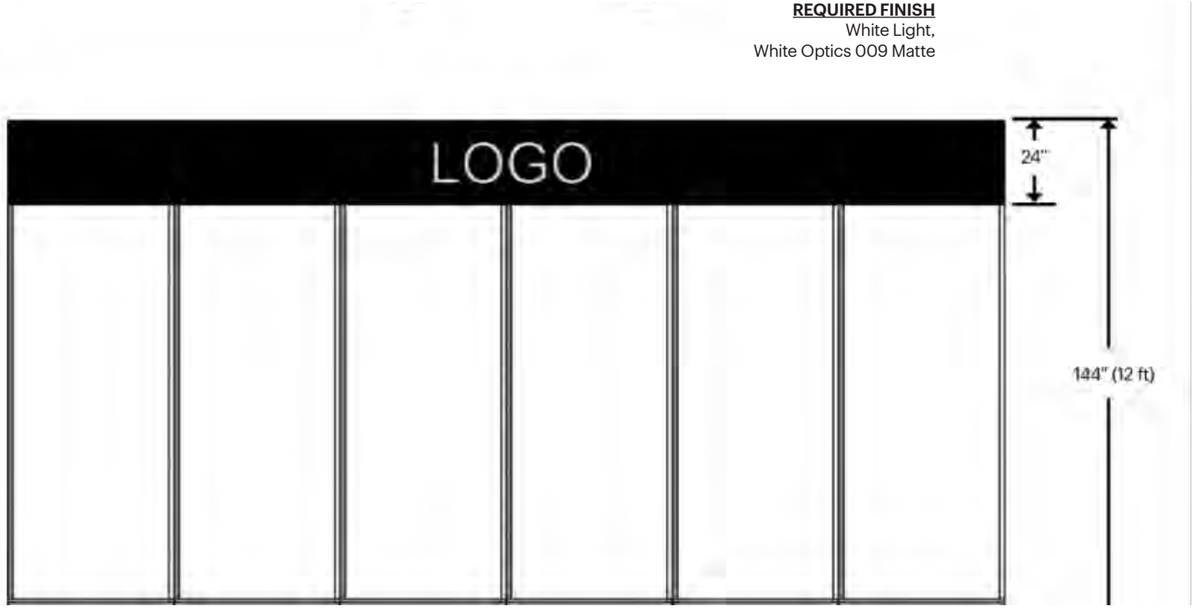

Note: *Previous header modules may exist but must be designed as a white logo reversed out of a black background. Ask your Best Buy contact for store-specific header needs and part numbers..*

You will need details and dimensions in these guides on Partner Portal:

Technology Design Standards

Slotted Vertical Uprights Vendor Guidelines

Last Updated August 12, 2026 8:20 AM | Best Buy partner and internal use only. Do not copy, publish, or distribute. The material in this document is confidential to Best Buy.

Illumination

Vendor Expectations

- Ensure brightness and color temperature of all lit elements follow Best Buy's Technology Design Standards.

Perimeter Wall Expectations

- Use permitted forms of lighting only, as outlined below. The only additional form of permitted perimeter lighting is natural illumination from display products and monitors.
- Ensure logo in primary header is lit and follows template, material and illumination specifications
- Illuminate, if desired, your brand headline and additional wayfinding callouts.
- Power any illuminated perimeter wayfinding via the product or the wall. Ensure lettering is no larger than 2.5"H.

Floor Pad Expectations

- Uplighting, shelf lighting, backlighting, fixture edge soft ambient lighting and light emitted by display products and monitors are permitted.
- Downlighting is only permitted in instances when overheads or canopies block ceiling emitted light.
- All other forms of lighting, including under-cabinet lighting and general excessive lighting are ***not*** permitted.

You will need details and dimensions in these guides on Partner Portal:

Technology Design Standards

Last Updated August 12, 2026 8:20 AM | Best Buy partner and internal use only. Do not copy, publish, or distribute. The material in this document is confidential to Best Buy.

Graphics

Vendor Expectations

- Ensure the product serves as the hero of the presentation; all signage and collateral should act in support.
- Ensure fixtures don't distract from or diminish the visual impact of the product.
    - — If using backer panels in your display, leverage neutral colors and textures.
- Aside from the logo header, use vendor logo sparingly.
- Include, if desired, only one printed QR code per every four linear feet of vendor presentation.
- Include, if desired, wayfinding copy above products or floor pad fixtures. Copy must identify category or technology and be intuitively understandable.
- Ensure digital content complies with Best Buy's video standards.

You will need details and dimensions in these guides on Partner Portal:

Copy & Claims Guidelines

QR Codes Guidelines

Last Updated August 12, 2026 8:20 AM | Best Buy partner and internal use only. Do not copy, publish, or distribute. The material in this document is confidential to Best Buy.

Merchandising

Vendor Expectations

- Ensure the product serves as the hero of the presentation.
- Prioritize your largest TV(s) on the perimeter wall.
- Display smaller TV(s) on the floor pad (up to 85” permitted; 75” preferred).
- Ensure all interactive elements, including buttons and touch components, meet ADA requirements.
- Ensure all electronics are reviewed by the Technology Design Lab.
- Support all products, display or salable, with a proximally located electronic shelf label (ESL).

You will need details and dimensions in these guides on Partner Portal:

ESL Pricing

Technology Design Standards

Last Updated August 12, 2026 8:20 AM | Best Buy partner and internal use only. Do not copy, publish, or distribute. The material in this document is confidential to Best Buy.

Inline Display Wedge

Overview

The inline display wedge helps create a standarized presentation in departments where it activates. It can be presented in either of two layout options:

- **Inline Display Wedge**
- **Inline Display Wedge with Double-Decker Add-On**

**Drawings and models of all Best Buy-designed parts available upon request.*



Inline Display Wedge



Inline Display Wedge with Double-Decker Add-On

Last Updated August 12, 2026 8:20 AM | Best Buy partner and internal use only. Do not copy, publish, or distribute. The material in this document is confidential to Best Buy.

Inline Display Wedge

Vendor Requirements

- Include your logo (centered or left-justified) in the top 6” of your presentation.
  Note: *Illuminated 3D logo lettering is permitted at a luminosity of 2,000–5,000 LUX. See Lighting Guidelines for additional information.*
- Lit logos on headers and light emitted by display product and monitors are permitted. Additional lighting opportunities may exist for inline presentations 4’ or wider. Connect with your Best Buy contact for details.
- Provide a backer graphic. Additional educational graphics are permitted as long as they enhance — and do not distract — from the products on display.
- Include product information on the front angle of the shelf, if desired, leaving space for ESL pricing.
- Secure product to the display using approved tethers, recoilers, mechanical fasteners or security devices that allow product to be interacted with while maintaining ADA compliance.
- Support all products, display or salable, with a proximally located ESL.
- Ensure all electronic components follow the Technology Design Standards on Partner Portal.

Double-Decker Add-On Additional Requirements

- Use the add-on shelf to display additional product, if desired. All display products must be priced.
- Ensure the add-on shelf does not exceed 3/8”H. If a thicker shelf is necessary for structural safety, pre-approval is required by Best Buy Design.

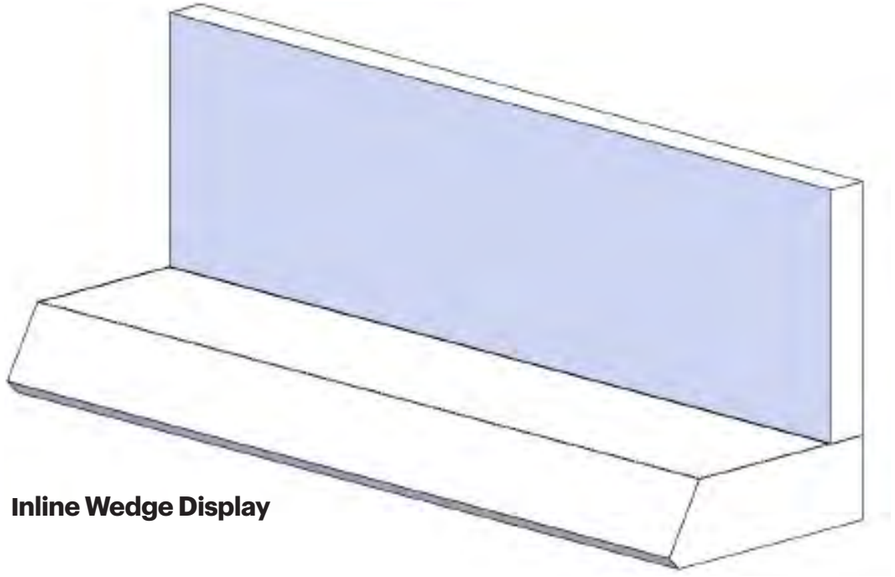

Inline Wedge Display



Inline Wedge Display with Double Decker Add-On

Last Updated August 12, 2026 8:20 AM | Best Buy partner and internal use only. Do not copy, publish, or distribute. The material in this document is confidential to Best Buy.

Accessibility for Customer Centricity

All displays need to be accessible and customer-centric, even if ADA compliance has already been met.

Display Requirements

- Show buttons or touchscreens only on the front of the display or angled on the flat surface of the display to invite interaction.
- Present products at the front of the display to enable customer reachability.
- Angle or display products in such a way that allows and encourages customers to see, touch and feel.

Display Recommendations

- Ensure products are easily visible and won't be obscured by other products, shelves or display components.
- Orient ESLs for the best viewing angle.

  Note: *All display and salable products must have a proximally located ESL. See ESL guidelines for details.*



Last Updated August 12, 2026 8:20 AM | Best Buy partner and internal use only. Do not copy, publish, or distribute. The material in this document is confidential to Best Buy.

Specifications

Vendor Requirements

- Provide the complete inline display wedge.
- Manufacture your display according to the form and dimensions shown below.
  Note: *Display depth varies based on shelf size. Ask your Best Buy contact which shelf applies to your display.*
  — 12” shelf: 11.5”D of display
  — 14” shelf: 14”D of display
  — 22” shelf: 21.738”D of display
- Ensure your display features the required finish:
  — PC938 Matte Black - IFS Coatings, Inc PLSM10812CN
- Use only a 15’ UL-listed cord to connect powered wedge fixtures to the power source.
- Attach your display to Best Buy’s standard shelves through the shelf’s perforation using a #10-32 threaded stud and #10-32 wing nut. Include threaded studs in each of the front corners of the display.
  Note: *See the Best Buy Shelving System pages in the Vendor Guidelines for drawings of the shelf perforation pattern.*
- Keep the total weight of your display within the permitted parameters of 25 lbs for 2’ shelves and 50 lbs for 4’ shelves.
- Ensure electronics, security and internal parts are easily accessible via a slide-out drawer system (recommended) or the top of the wedge.
- Secure all parts and pieces to the display.
  Note: *Keyboards must feature acrylic covers with sample cutouts to prevent keycap removal.*

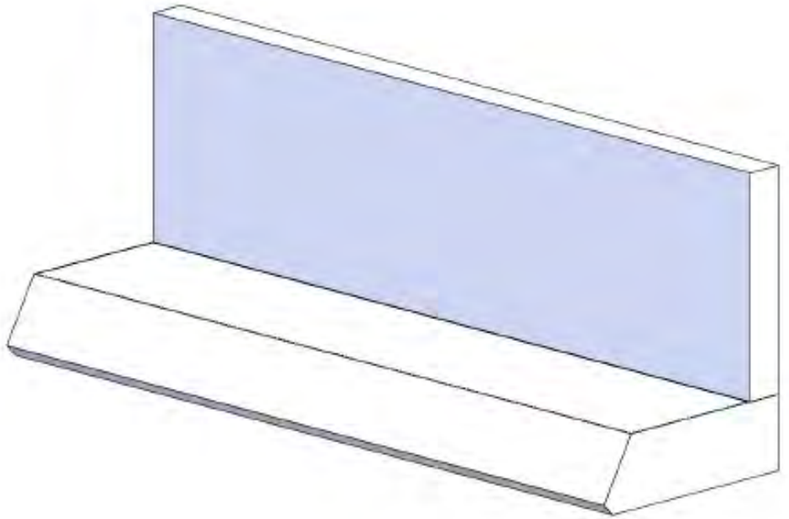

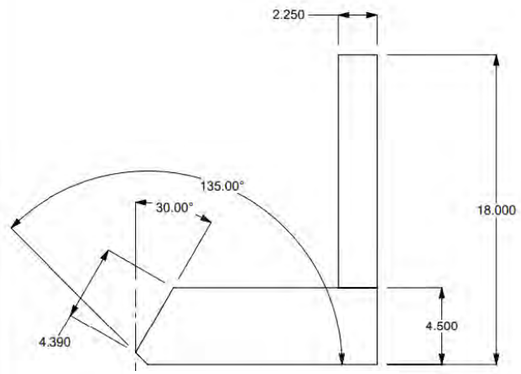

See depth dimensions in notes

“4’W” display

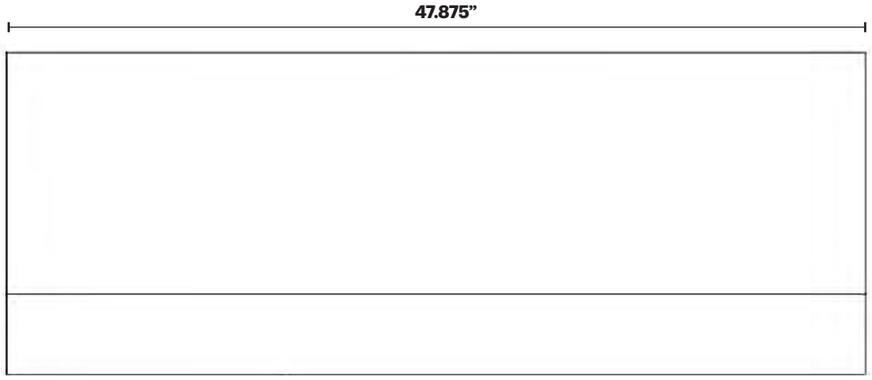

“2’W” display

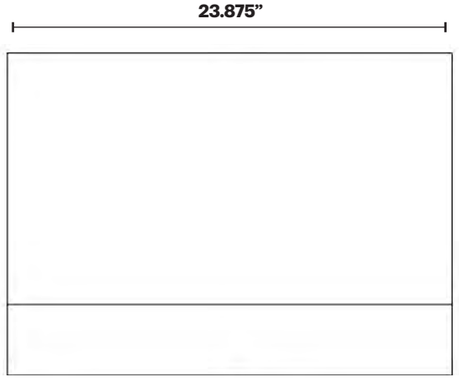

This display is designed to sit on a standard Best Buy shelf and attach via the shelf perforation pattern. Usable display depth varies based on the shelf depth programmed for the space. Please consult your Project Manager and refer to the Dimensions & Perf Pattern section for complete dimensional and attachment details.

Last Updated August 12, 2026 8:20 AM | Best Buy partner and internal use only. Do not copy, publish, or distribute. The material in this document is confidential to Best Buy.

Inline Focal & Platform

Overview

Inline focals and platforms complement each other to hold and draw attention to your products.

Best Buy previously offered multiple platforms to fit varying shelves, but a one-size-fits-all design was implemented in 2024 to prevent vendors from needing to manage multiple assemblies.

**Drawings and models of all parts available upon request.*

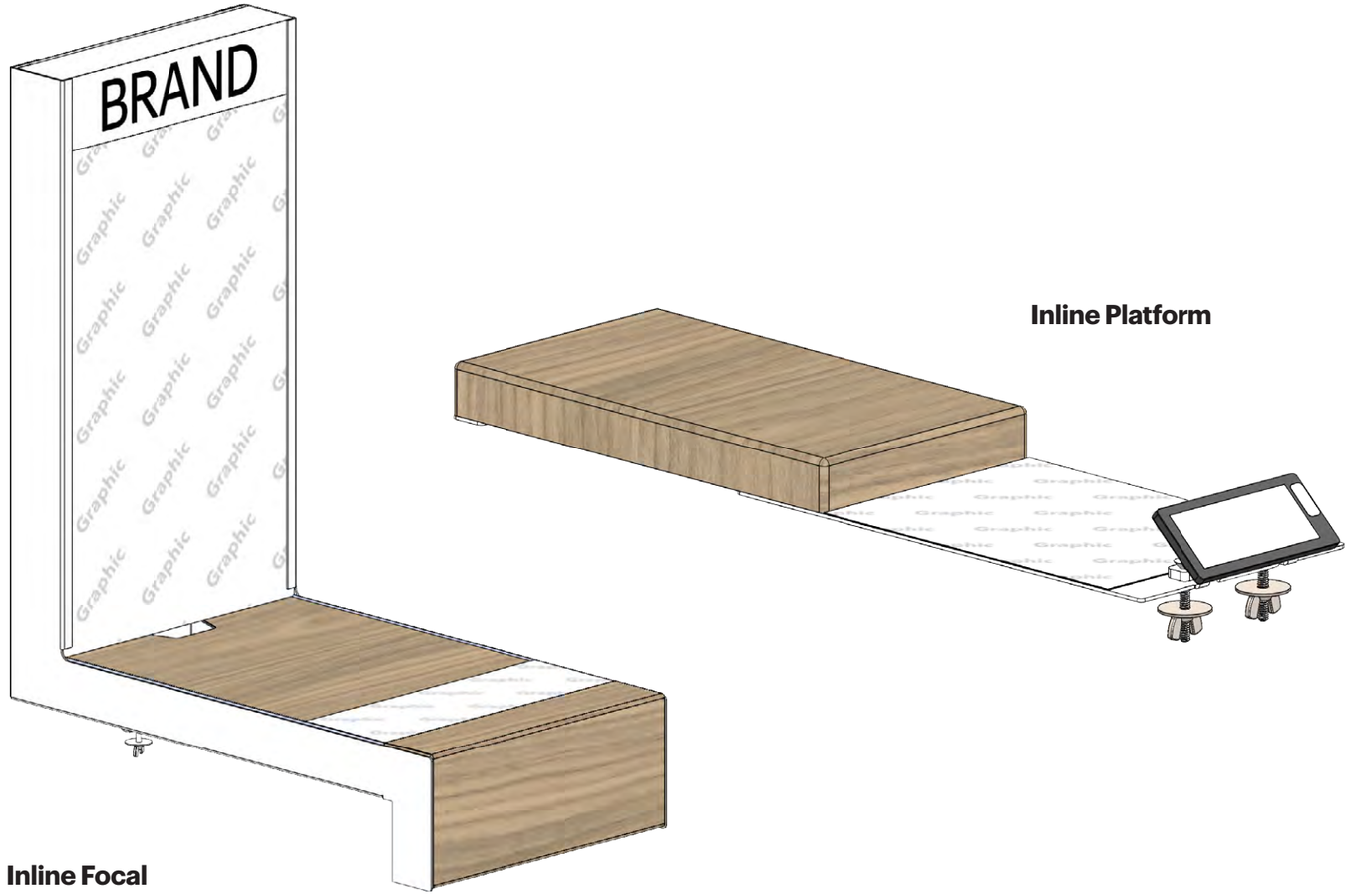

Last Updated August 12, 2026 8:20 AM | Best Buy partner and internal use only. Do not copy, publish, or distribute. The material in this document is confidential to Best Buy.

Inline Focal

Inline Focal Overview

Inline focals introduce your display with your brand story. Focals are optional, and you may use one of four types:

- Plain Header | Graphic
- Illuminated Header | Graphic
- Plain Header | Media Player | Graphic
- Illuminated Header | Media Player | Graphic

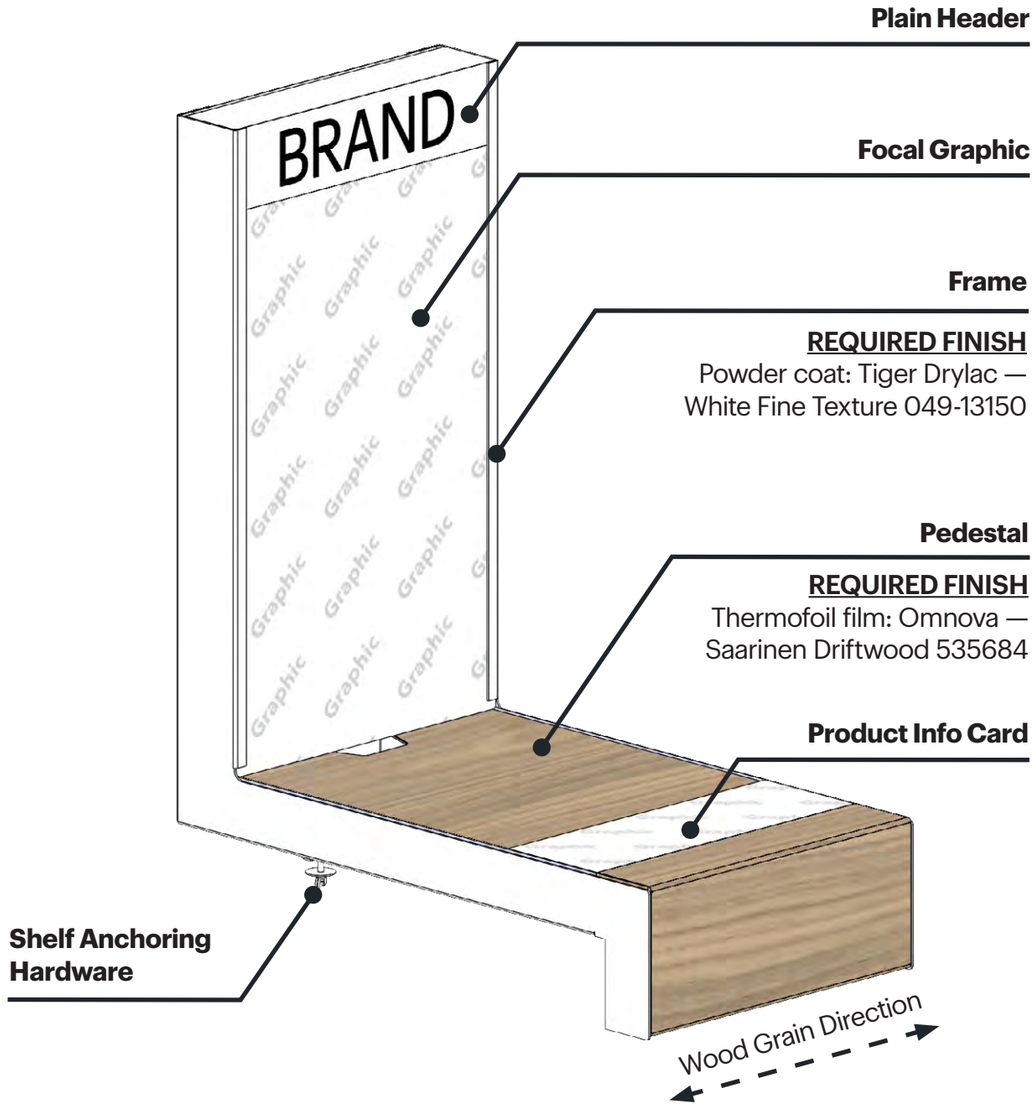

Last Updated August 12, 2026 8:20 AM | Best Buy partner and internal use only. Do not copy, publish, or distribute. The material in this document is confidential to Best Buy.

Varieties

Inline focals are designed for use on universal shelves.
A platform riser is required if using on standard shelves.

Inline focals are available in the following sizes:

- 12”W x 12”D
- 12”W x 20”D

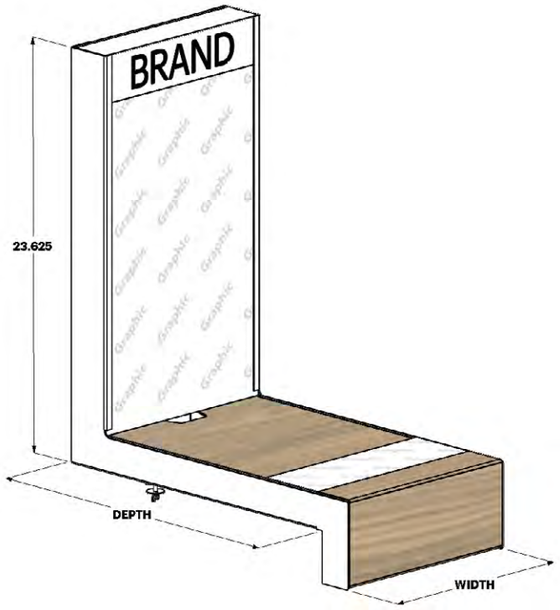

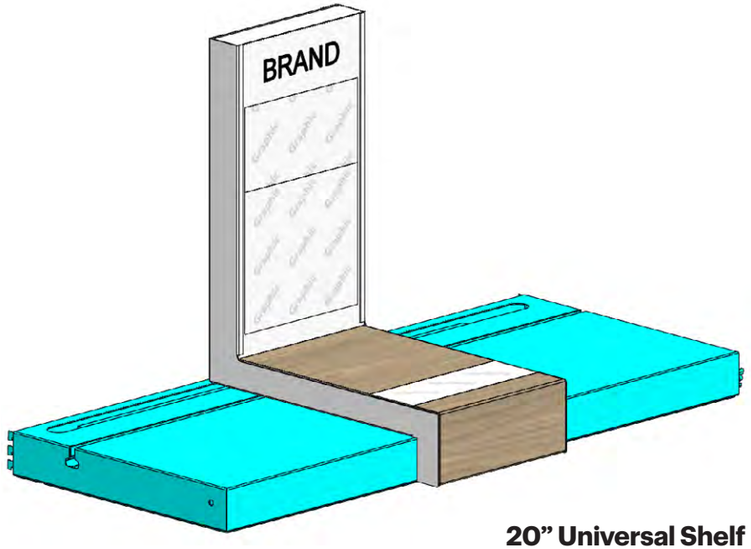

20” Universal Shelf

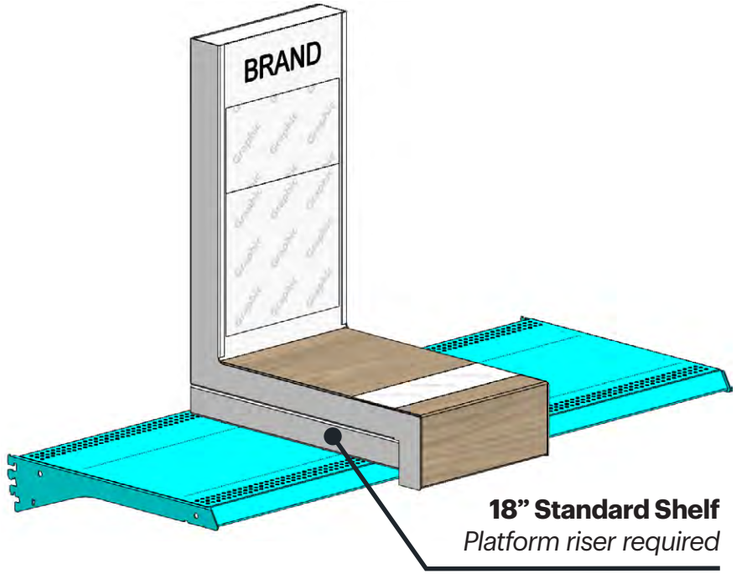

18” Standard Shelf
Platform riser required

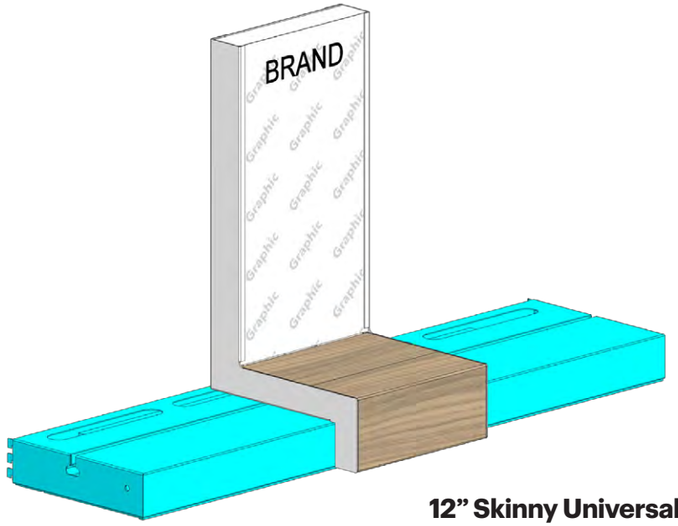

12” Skinny Universal Shelf

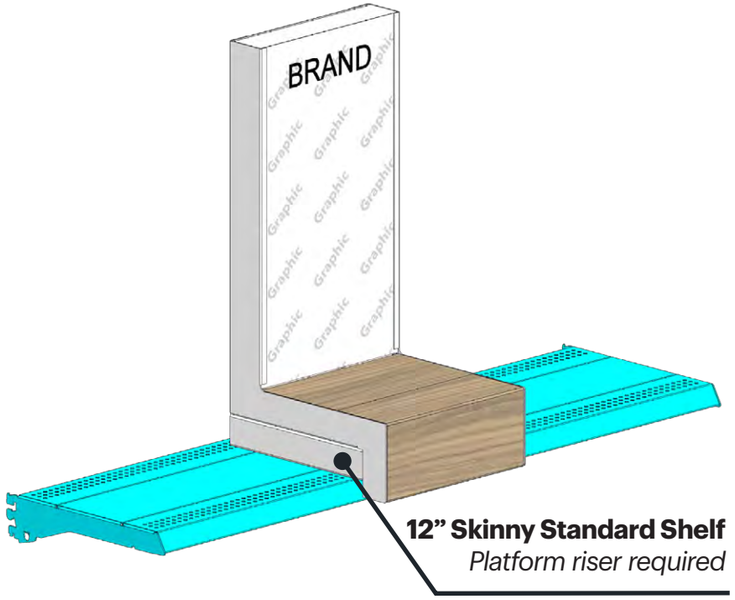

12” Skinny Standard Shelf
Platform riser required

Last Updated August 12, 2026 8:20 AM | Best Buy partner and internal use only. Do not copy, publish, or distribute. The material in this document is confidential to Best Buy.

Components

Vendor Expectations

- Build your focal display using a backer insert, base assembly and base insert. If displaying your focal on a standard shelf, a platform riser is required.
- Mount your display product to the base insert.
  Note: *Inserts are interchangeable/replaceable in the focal frame when updating display product.*

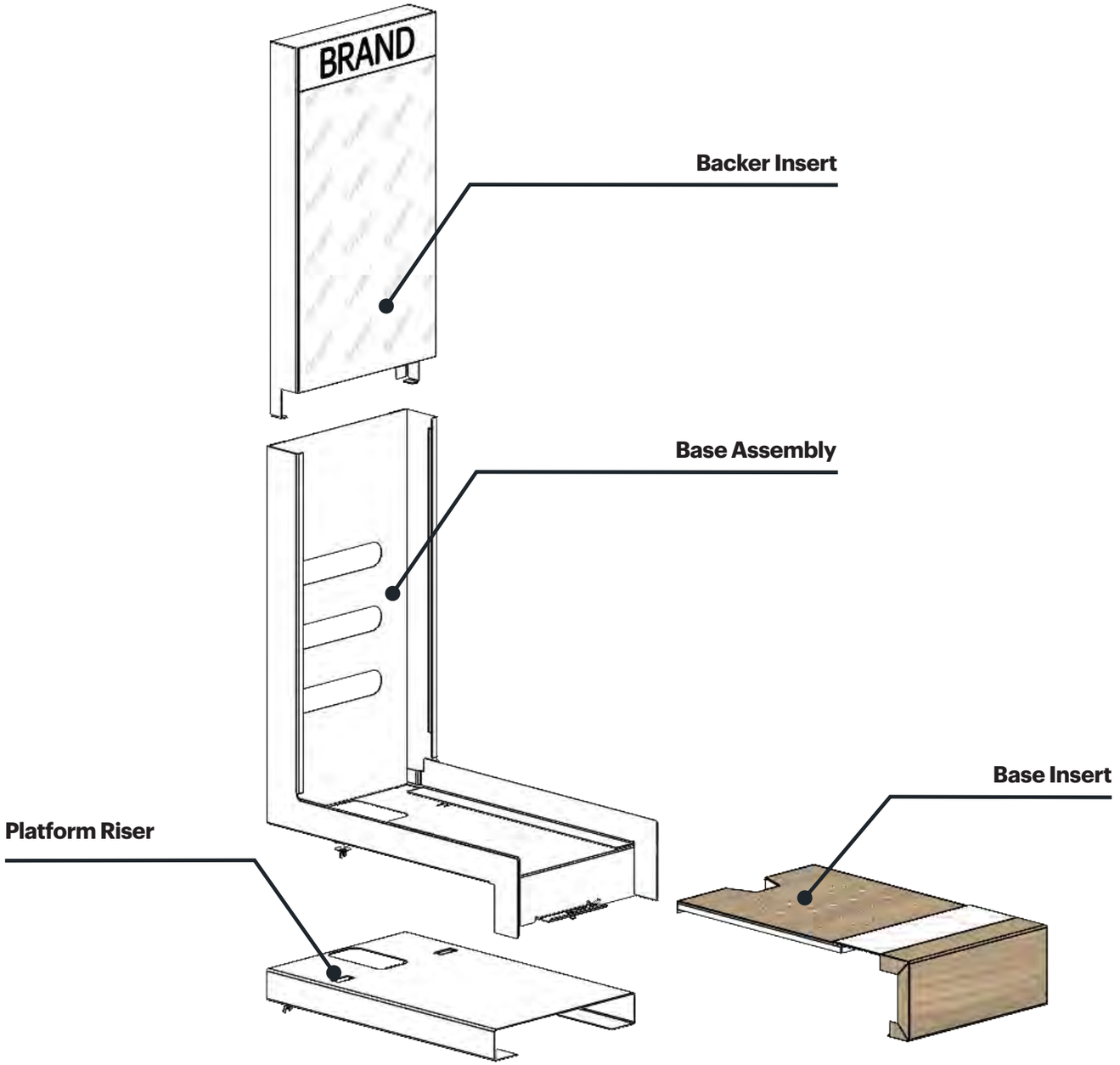

Last Updated August 12, 2026 8:20 AM | Best Buy partner and internal use only. Do not copy, publish, or distribute. The material in this document is confidential to Best Buy.

Backer Insert

There are four backer insert types available for your focal:

- Plain Header | Graphic
- Illuminated Header | Graphic
- Plain Header | Media Player | Graphic
- Illuminated Header | Media Player | Graphic

The same backer inserts are used for both the 12”D and 20”D focals.

Plain Header



Illuminated Header



Plain Header with Media Player



Illuminated Header with Media Player



Last Updated August 12, 2026 8:20 AM | Best Buy partner and internal use only. Do not copy, publish, or distribute. The material in this document is confidential to Best Buy.

Base Insert

The base insert holds your display product.

Best Buy provides a .8” diameter perforated grid for product anchoring. The perforated grid allows display product to be changed out as the display evolves.

Vendor Expectations

- Secure product to the pedestal with approved tethers, recoilers, mechanical fasteners or security devices.
- Purchase electronic security devices from an approved vendor in the Technology Design Standards.

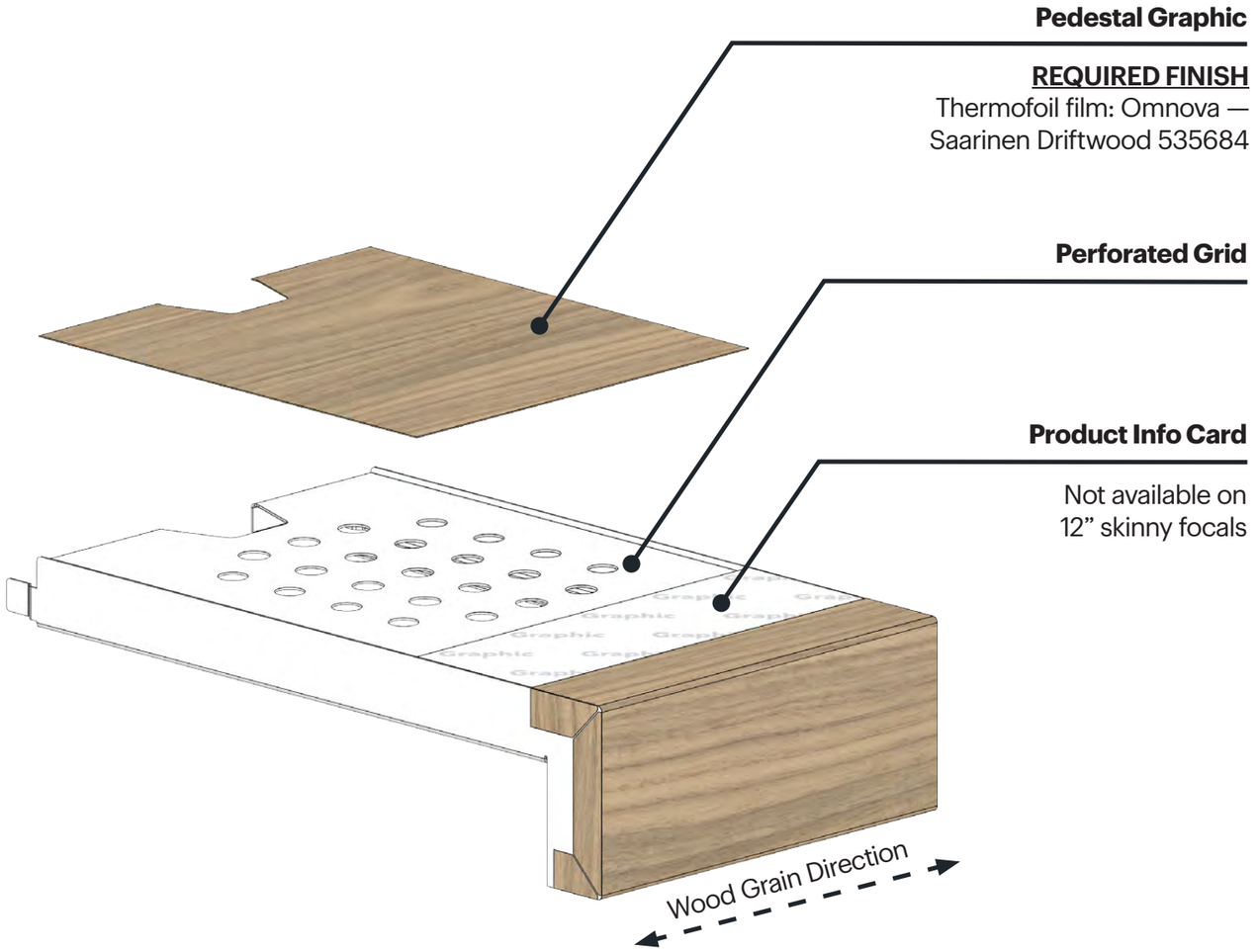

Find more details and dimensions in this guide on Partner Portal:

Technology Design Standards

Last Updated August 12, 2026 8:20 AM | Best Buy partner and internal use only. Do not copy, publish, or distribute. The material in this document is confidential to Best Buy.

Graphics

Vendor Expectations

- Create a focal graphic and product info card (if applicable), complying with all copy, design, size, substrate, etc. requirements outlined below, on the following page and in the guides on Partner Portal.
  Size: Varies; see details at right
  Substrate: 30 mil Magnetic Vinyl, White



Plain Header Focal Graphic

Size: 11.275”W x 21.5”H



Illuminated Header Focal Graphic

Size: 11.475”W x 18.425”H



Plain Header with Media Player
Focal Graphic

Size: 11.475”W x 12.215”H



Illuminated Header with Media Player
Focal Graphic

Size: 11.475”W x 12.215”H

Find more details and dimensions in these guides on Partner Portal:

Copy & Claims

Vendor Signage

Technology Design Standards

Product Info Card

Size: 11.65”W x 3.9375”H
Note: *Not available on 12” skinny focals*

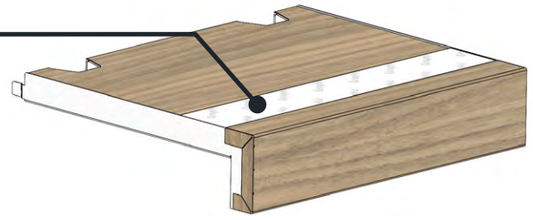

Last Updated August 12, 2026 8:20 AM | Best Buy partner and internal use only. Do not copy, publish, or distribute. The material in this document is confidential to Best Buy.

Graphic Details: Focal Graphic

- **Logo**
  Use color logo in this space, if desired.

- **Lifestyle Image Area**
  A flat, printed graphic is activated on the plain and illuminated headers without media players.
  Size: 8.535”W x 5.24”H

- **Backer**
  Font: Human BBY Bold
  Size: 50pt, three lines max.
  Color: 45% black

- **Number**
  Font: Human BBY Regular
  Size: 7pt
  Color: 45% black

Plain Header

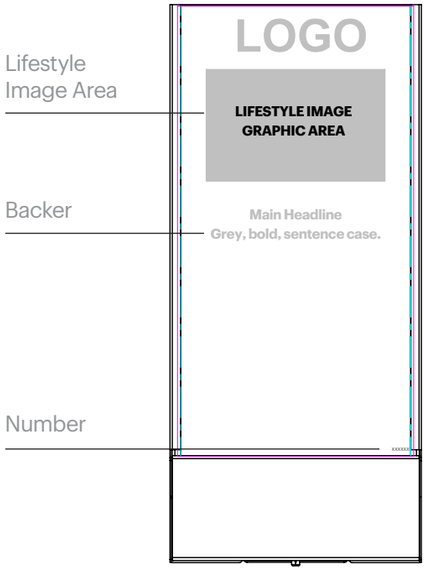

Illuminated Header

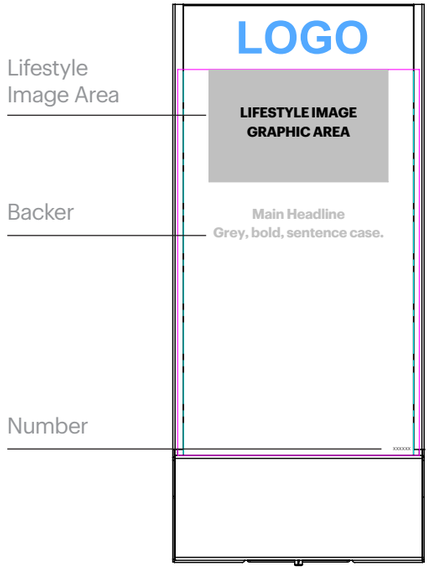

Plain Header with Media Player

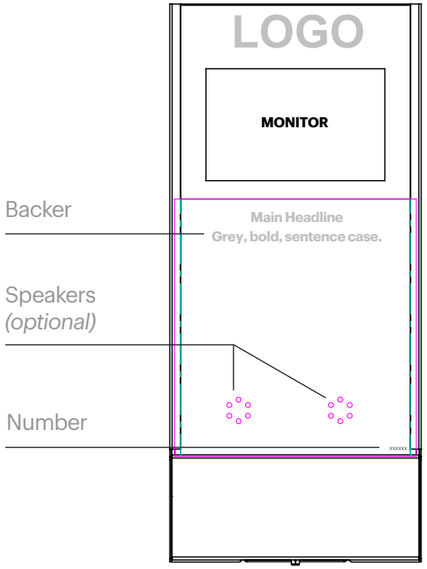

Illuminated Header with Media Player

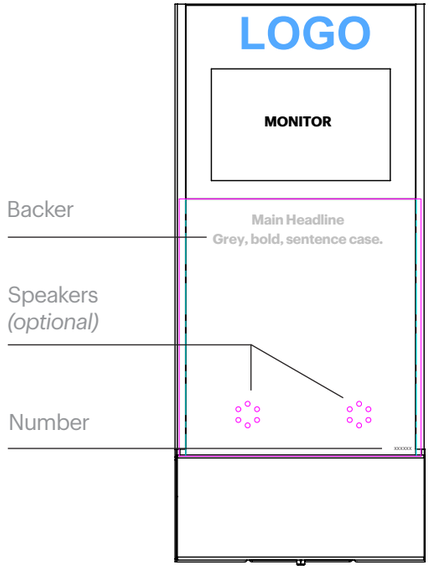

Last Updated August 12, 2026 8:20 AM | Best Buy partner and internal use only. Do not copy, publish, or distribute. The material in this document is confidential to Best Buy.

Graphic Details: Product Info Card

Choose one of two template options, adhering to the exact background color, dimensions and details below.

- **Size:** 11.65”W x 3.9375”H
- **Substrate:** 30 mil Magnetic Vinyl, White
- **Font color:** 65% black
- **Font size:** Varies, see sizes and characters at right
- Include a title that features the product name only (no vendor names are permitted).
- Include up to five product-specific features or benefits.

Note: *Templates are available upon request.*

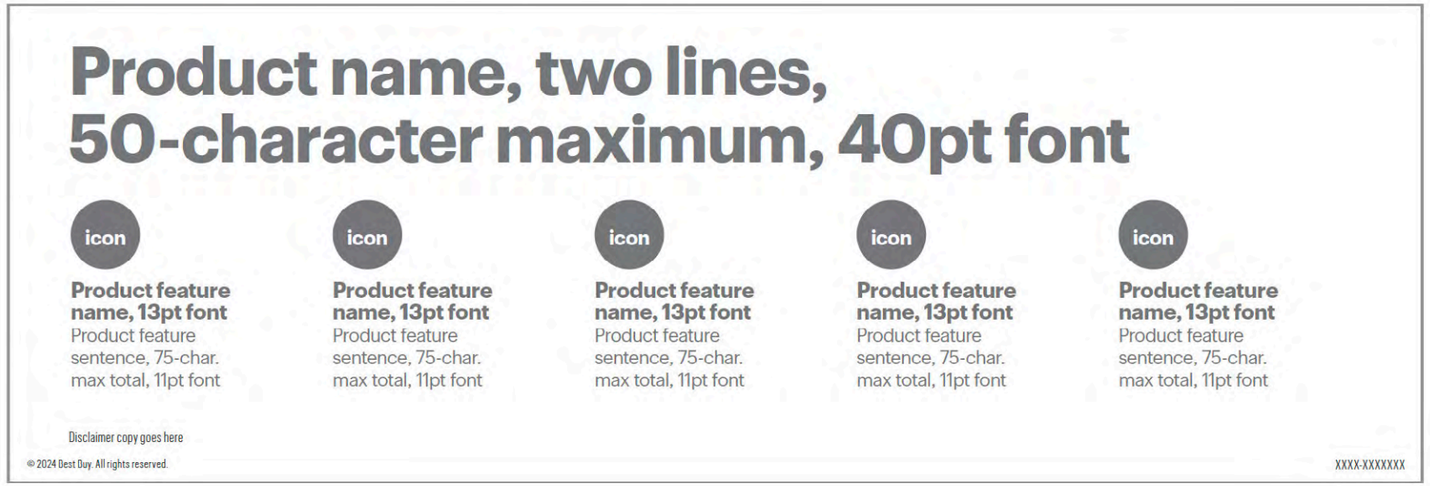

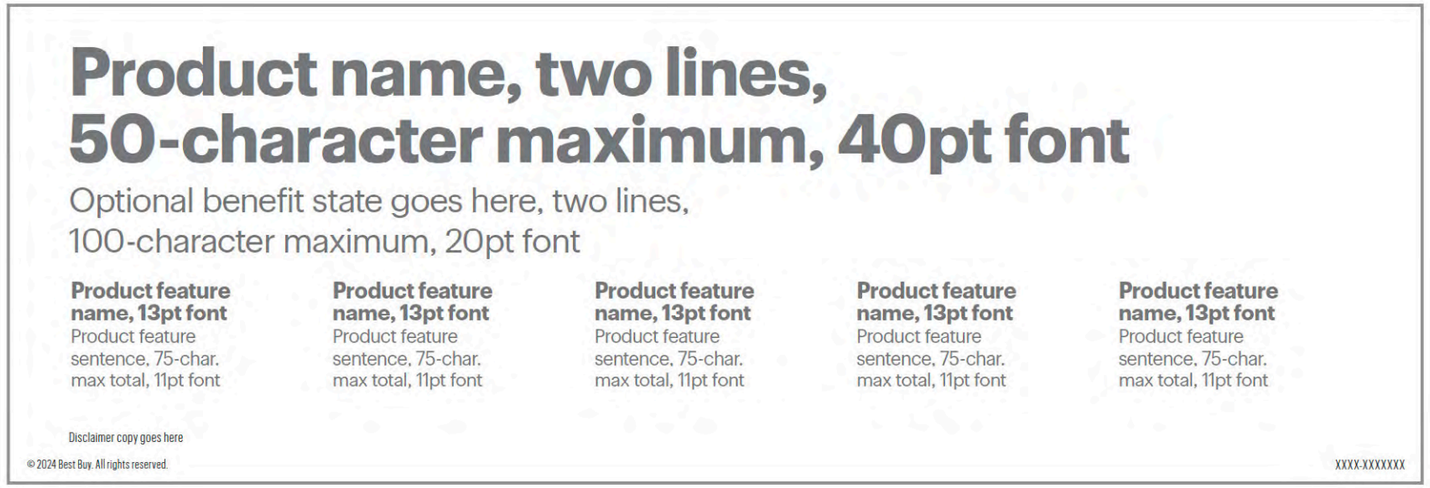

Last Updated August 12, 2026 8:20 AM | Best Buy partner and internal use only. Do not copy, publish, or distribute. The material in this document is confidential to Best Buy.

Integrated Technology

Monitors
- Monitors must be mechanically fastened to the threaded studs in the focal backer.
- Approved monitor: Bluefin 20-3002-1091 (Includes HDM/VGA/microSD input)

Illumination
- Illuminated headers must be approved by the Technology Design Lab and meet the luminosity requirements in the Technology Design Standards on Partner Portal.

Media
- Embedded media players are permitted in the focal backer. Media players must be approved by the Technology Design Lab.

Buttons
- Interactive buttons are permitted in the focal backer or base insert. They must be:
  - — Duco DTPB-X-32 (only approved button)
  - — Surrounded by a white light-up ring
  - — Shown with text that clearly defines the button action. Text must be:
    - — Black, size 14, Human BBY Medium
    - — Located below the button
    - — Printed on the substrate (no decals)

Find more details and dimensions in these guides on Partner Portal:

Technology Design Standards

Button Guidelines

Merchandising

Each vendor may feature one inline focal per display, using the fixture to spotlight one hero product.

If multiple vendors share space, up to two total focals (nonadjacent) are permitted per 4 linear feet.

Vendor Expectations
- Display your product within the permitted space to ensure no obstructions. Product may not extend wider than focal edges or higher than text or video on focal backer.
- Ensure no POP is attached to the product or display. ***Note:*** *Any POP that is included will be removed by store staff.*
- Support all products with a proximally located peg label-sized Electronic Shelf Label (ESL).
- Include your choice of Demo, Display or Dead Mock Display product(s).
  Demo: An out-of-box product feature allowing for an interactive experience.
  Display: A non-interactive product included to show materiality, form factor, colorways and sizing.
  Dead Mock Display: A non-interactive 3D model of salable product intended to show form factor, colorways and sizing.

Note: *Printed representational stand-ins of products are not permitted.*

Last Updated August 12, 2026 8:20 AM | Best Buy partner and internal use only. Do not copy, publish, or distribute. The material in this document is confidential to Best Buy.

Fixture Parts

Refer to the part numbers below when ordering any necessary components:

Inline Focals			
Focal Width	**Focal Depth**	**Component**	**Best Buy Part #**
12”	**12”**	Base Assembly	1016995
		Base Insert	1016989
		Platform Riser	1017022
12”	**20”**	Base Assembly	1010577
		Base Insert	1017893
		Platform Riser	1010566

Inline Focal Backer Inserts		
Focal Width	**Component**	**Best Buy Part #**
12”	Plain Header | Graphic	1010543
	Illuminated Header | Graphic	1010546
	Plain Header | Media Player | Graphic	1010548
	Illuminated Header | Media Player | Graphic	1010541

Last Updated August 12, 2026 8:20 AM | Best Buy partner and internal use only. Do not copy, publish, or distribute. The material in this document is confidential to Best Buy.

Inline Platform

Inline Platform Overview

Inline platforms hold and draw attention to products (with or without power). They feature a wooden pedestal attached to a metal base anchored to the shelf.

Best Buy previously offered multiple inline platforms to fit varying shelves, but a one-size-fits-all design was implemented in 2024 to prevent vendors from managing multiple assemblies.

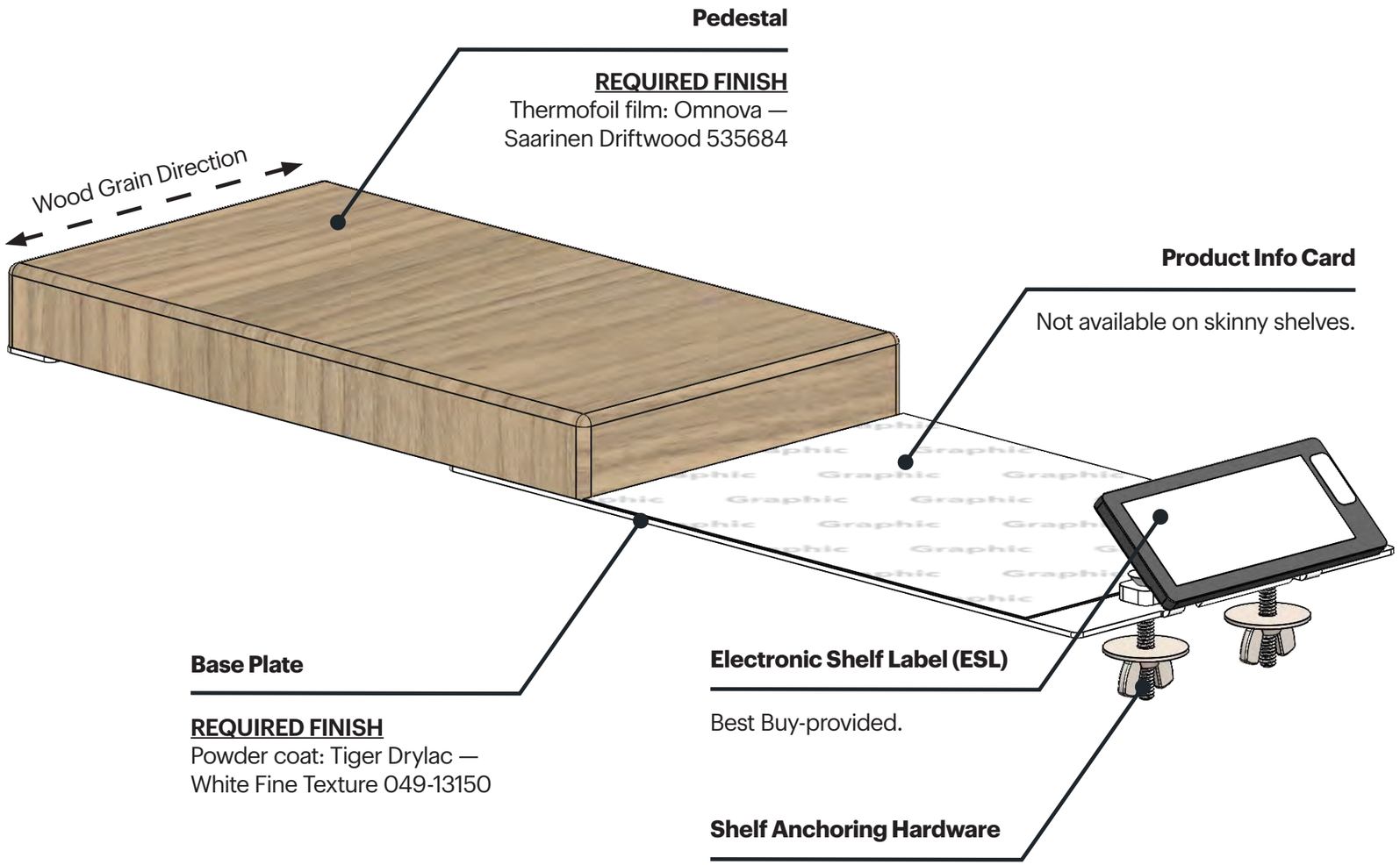

Last Updated August 12, 2026 8:20 AM | Best Buy partner and internal use only. Do not copy, publish, or distribute. The material in this document is confidential to Best Buy.

Fixture Varieties

Inline platforms are available in two widths:
- 5.25”W
- 11.5”W

Each is configurable to fit any shelf depth/style, including:
- 20” Universal
- 12” Skinny Universal
- 18” Standard
- 12” Skinny Standard
- Side Stock Endcap (not shown)

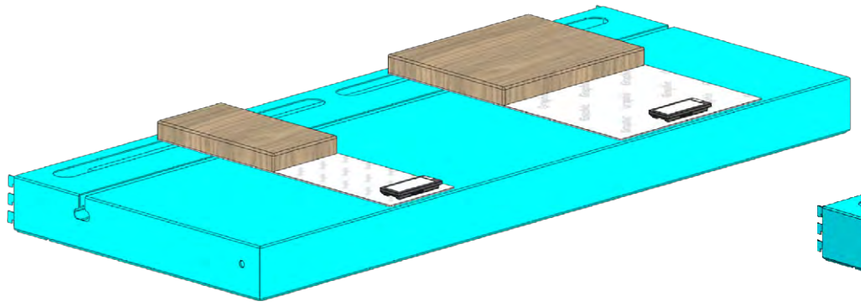

20” Universal

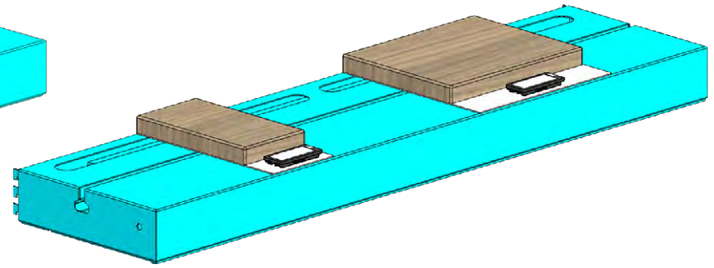

12” Skinny Universal

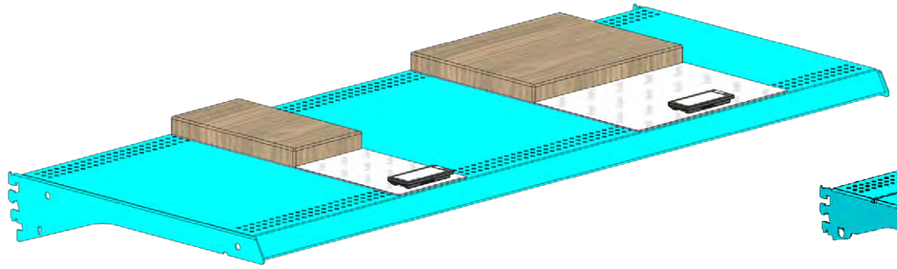

18” Standard

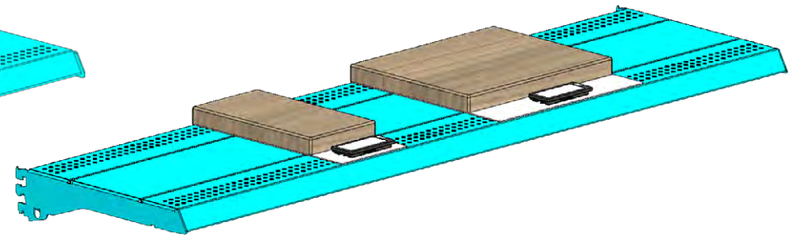

12” Skinny Standard

Last Updated August 12, 2026 8:20 AM | Best Buy partner and internal use only. Do not copy, publish, or distribute. The material in this document is confidential to Best Buy.

Platform Depth

The base plate on the inline platform is configurable to accommodate all shelf depths.

Vendor Expectations

- Use short configuration for shelves less than 18”D
- Use long configuration for shelves 18”D or deeper

Note: *Product info cards are not available on short configuration.*

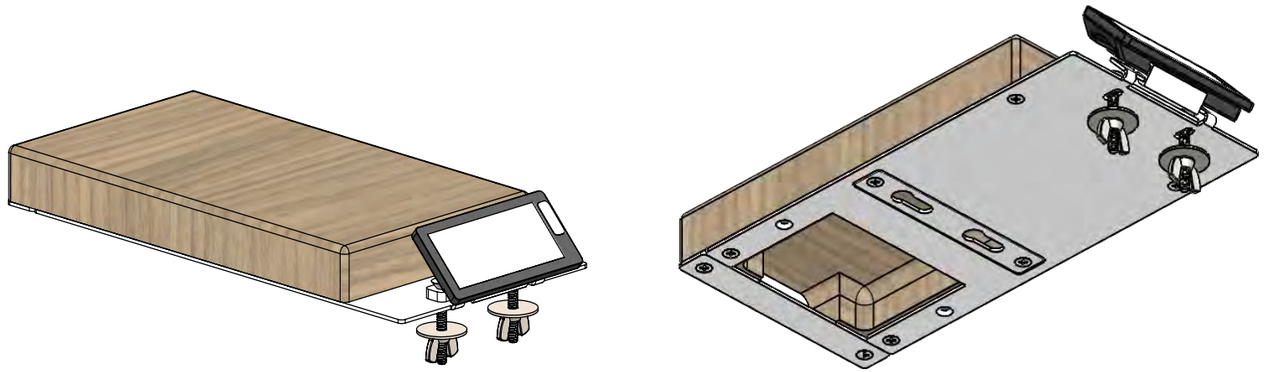

Short Configuration

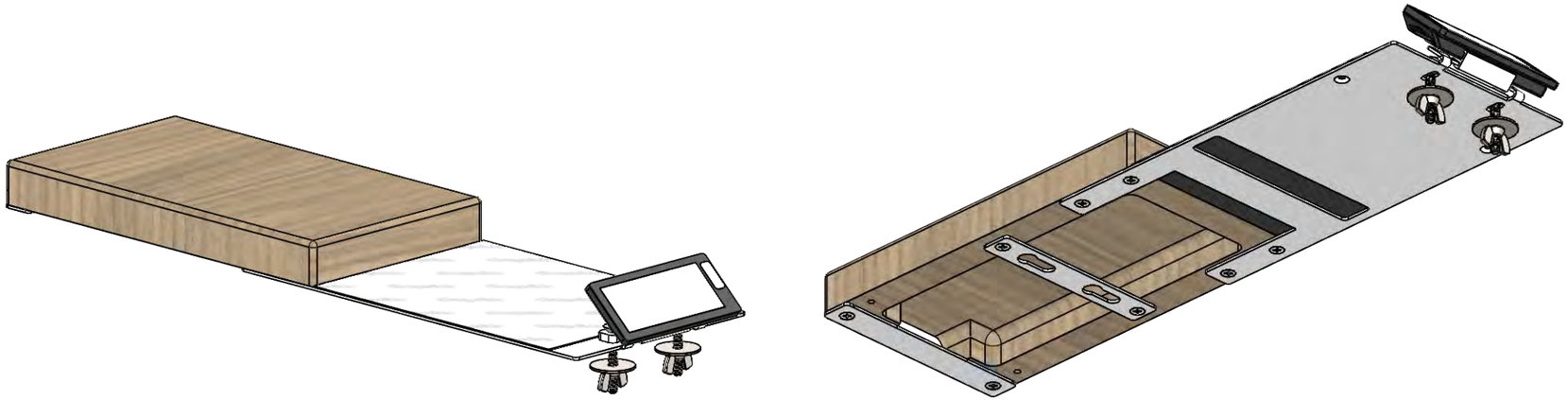

Long Configuration

Last Updated August 12, 2026 8:20 AM | Best Buy partner and internal use only. Do not copy, publish, or distribute. The material in this document is confidential to Best Buy.

Shelf Attachment

The inline platform attaches to standard and universal shelves by engaging different areas of the base plate.

For Standard Shelves

Studs engage through base plate slot.

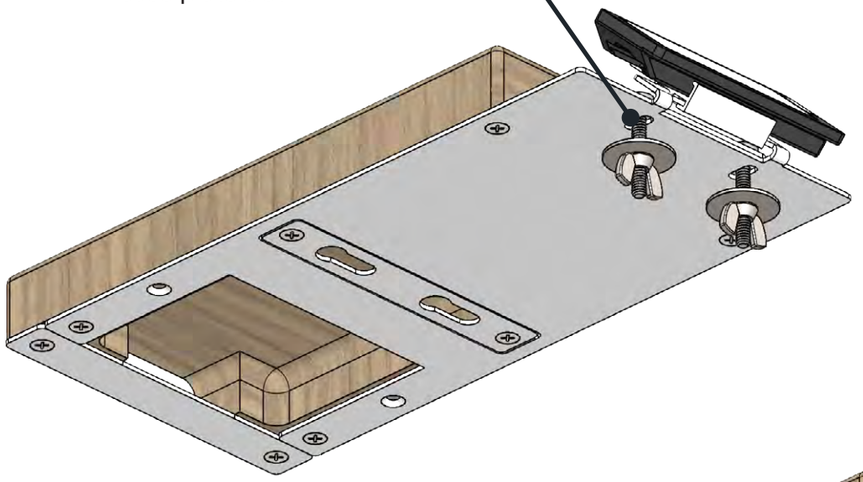

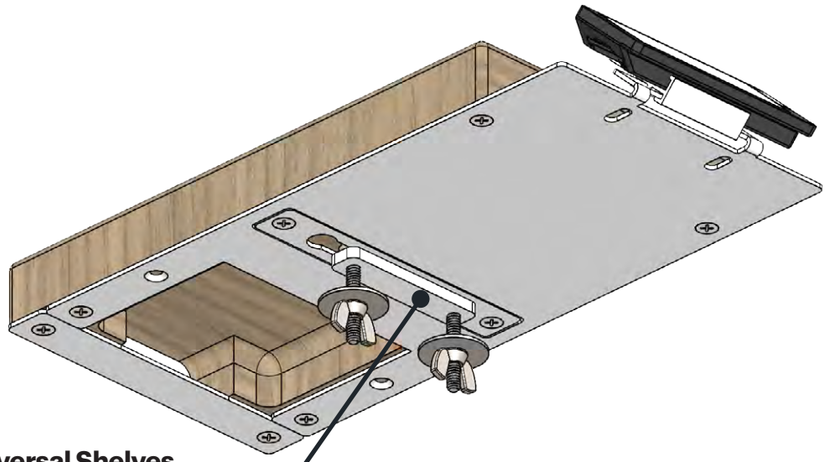

For Universal Shelves

Screw heads insert into keyholes and plate.

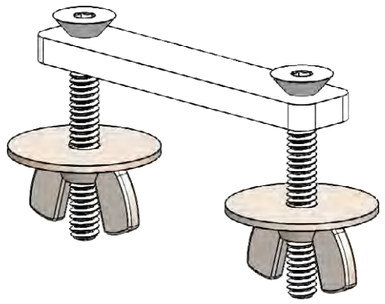

Shelf Anchoring Hardware

Last Updated August 12, 2026 8:20 AM | Best Buy partner and internal use only. Do not copy, publish, or distribute. The material in this document is confidential to Best Buy.

Security, Power and Attachments

Vendor Expectations

- Secure product to the pedestal with approved tethers, recoilers, mechanical fasteners or security devices.
- Purchase, if desired, electronic security devices from an approved vendor in the Technology Design Standards (below).

Note: *The pedestal cavity is only necessary for power/ attachment clearance. If it is not needed for your display product, you may omit this feature.*

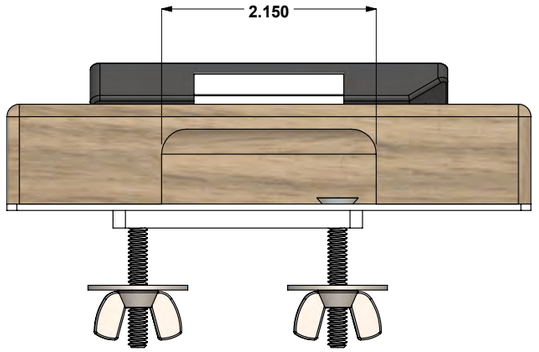

End View

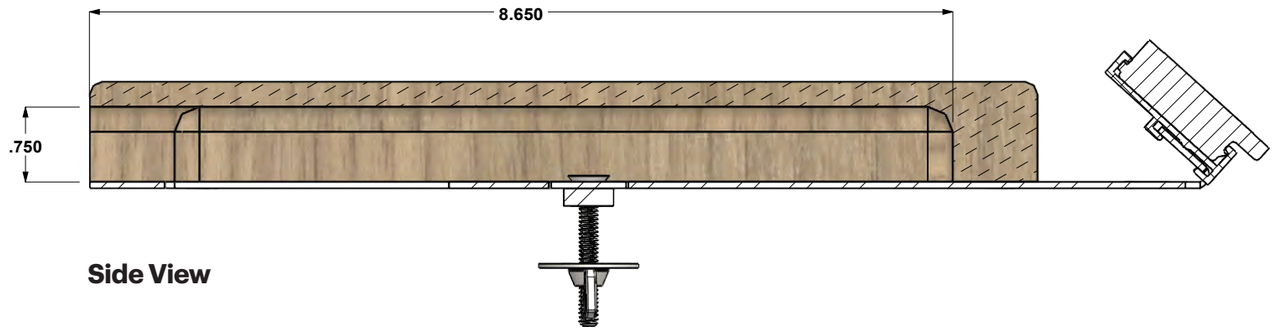

Side View

Find more details and dimensions in this guide on Partner Portal:

Technology Design Standards

Last Updated August 12, 2026 8:20 AM | Best Buy partner and internal use only. Do not copy, publish, or distribute. The material in this document is confidential to Best Buy.

Graphics

The product info card on the inline platform invites you to highlight product features. These cards are populated with vendor-provided content and are designed and produced by Best Buy.

Product info cards exist in two sizes, depending on the width of the platform used:

- 5.25”W x 7.25”D; copy only
- 11.5”W x 7.25”D; copy aligning to 5.25”W template

Vendor Expectations

- Provide content in keeping with the Best Buy-provided product info card template.
- Ensure all content follows Best Buy’s Copy & Claims Guidelines (below).

Note: *Product info cards are not available on platforms displayed on skinny shelves.*

Product Info Card

Size: 5.25”W x 7.25”H
Substrate: .020 Magnetic Vinyl, White



Product Info Card

Size: 11.5”W x 7.25”H
Substrate: .020 Magnetic Vinyl, White

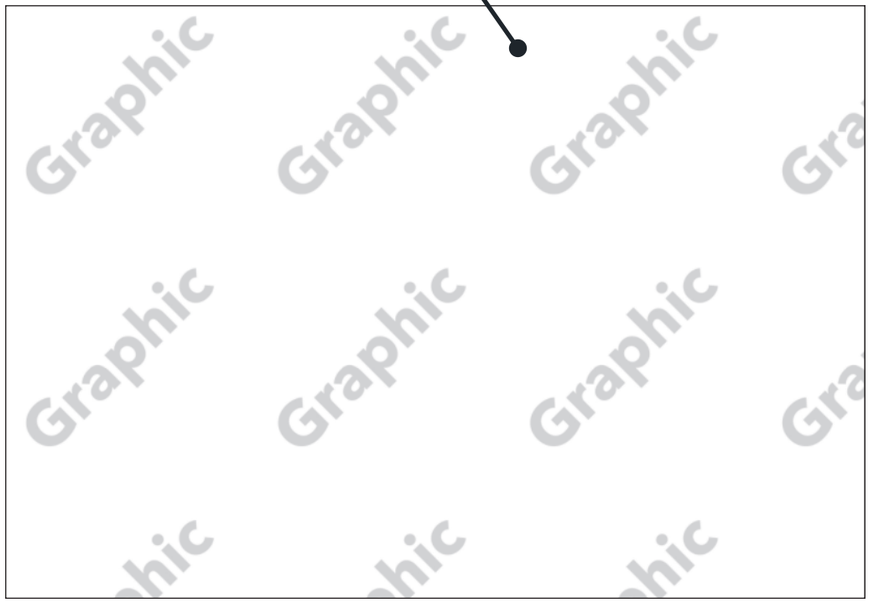

Find more details and dimensions in this guide on Partner Portal:

Copy & Claims Guidelines

Last Updated August 12, 2026 8:20 AM | Best Buy partner and internal use only. Do not copy, publish, or distribute. The material in this document is confidential to Best Buy.

Merchandising

Vendor Expectations

- Merchandise products as follows:
  - — One product on 5.25”W platform
  - — Up to two products on 11.5”W platform
- Display your product within the space permitted. Product may not extend wider than the platform edges or higher than the inline fixture.
- Ensure no POP is attached to the product or display. ***Note:*** *Any POP that is included will be removed.*
- Include—on the front of the base plate—a peg label-sized electronic shelf label (ESL) for each product on the platform.
- Include your choice of Demo, Display or Dead Mock Display product(s).
  - — **Demo:** An out-of-box product feature allowing for an interactive experience.
  - — **Display:** A non-interactive product included to show materiality, form factor, colorways and sizing.
  - — **Dead Mock Display:** A non-interactive 3D model of salable product intended to show form factor, colorways and sizing.

Note: *Printed representational stand-ins of products are not permitted.*

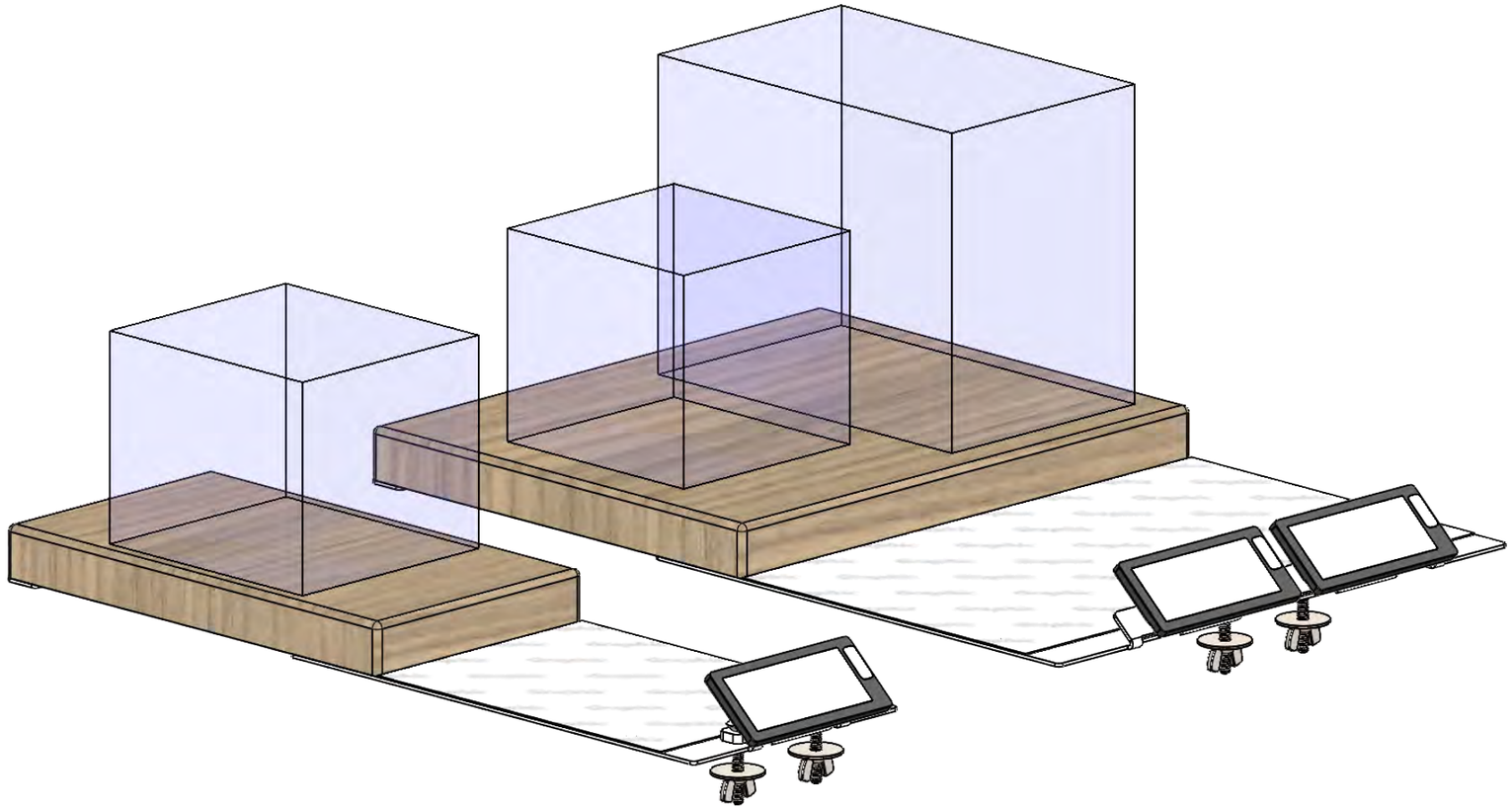

Find more details and dimensions in this guide on Partner Portal:

ESL Pricing

Last Updated August 12, 2026 8:20 AM | Best Buy partner and internal use only. Do not copy, publish, or distribute. The material in this document is confidential to Best Buy.

Fixture Parts

Refer to the part numbers below when ordering any necessary components:

Fixture Component	Best Buy Part Number
Inline Platform, 5.25”W	1024912
Inline Platform, 11.5”W	1024925
Skinny Standard Shelf, 12”D	1014797
Standard Shelf, 18”D	1012249
Skinny Universal Shelf, 12”D	1020948
Universal Shelf, 20”D	1003529
Skinny Lowbay Gondola Assembly (14” base deck)	R0019
Standard Lowbay Gondola Assembly (24” base deck)	R0010

Last Updated August 12, 2026 8:20 AM | Best Buy partner and internal use only. Do not copy, publish, or distribute. The material in this document is confidential to Best Buy.

Additional Graphic Opportunities

Inline Backer Graphic

Vendor Expectations

- Provide a backer graphic, adhering to the applicable template's exact dimensions (see examples at right).
- If no focal is present, include your logo within the top 6" of the backer.
- If desired, one printed QR code may be included in the top right corner of the backer for educational purposes only.
- The QR code must be accompanied by a brief call to action, both of which must be sized according to Best Buy's template. QR codes directing to promotional information will not be permitted.

Best Practices

- Select a single image, texture or color to fill the entire backer.
  Note: *Select an image carefully to ensure the subject of your photo is appropriately placed.*
- Prioritize the following for photo selection:
  Content: Lifestyle imagery of humans interacting with products.
  Crop: Humans and products largely centered, with products clearly visible.
- Choose from these alternate options only if lifestyle imagery of humans/products isn't available or allowed:
  — Lifestyle imagery of products without humans.
  — Hero product imagery on a neutral color field.

Note: *Templates are available upon request.*

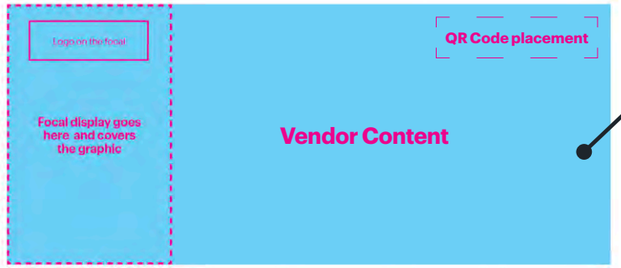

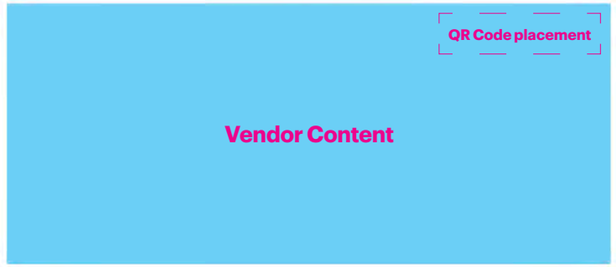

4' Inline Backer Graphic
(2 options)

Size: 47.938"W x 20.313"H
Substrate: Magnetic Receptive (10-12.5mil, 94–97 bright)

Notes:
— Include a tagline, if desired.
— Backer may include a headline (two-line maximum; 25-character maximum per line) and a subhead (200-character maximum). The message must be relevant to all products on display.
— Ensure copy contrasts with image for legibility.

4' Examples

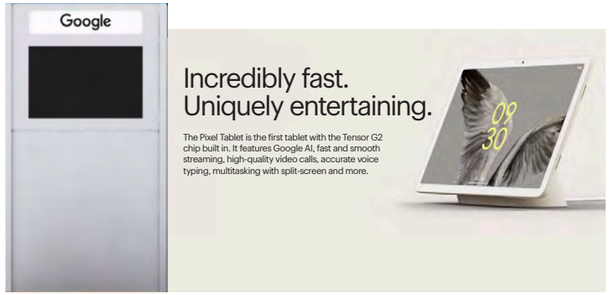

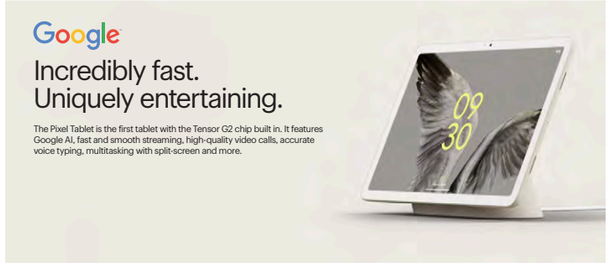

2' Inline Backer Graphic

Size: 23.95"W x 20.313"H
Substrate: Magnetic Receptive (10-12.5mil, 94–97 bright)

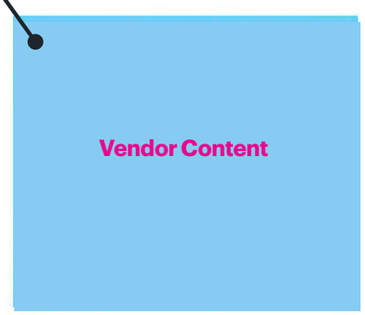

Last Updated August 12, 2026 8:20 AM | Best Buy partner and internal use only. Do not copy, publish, or distribute. The material in this document is confidential to Best Buy.

Inline Easel

The easel is designed for specific situations to promote temporary offers or bundled messages and should only be used after all other options have been exhausted.

Vendor Expectations

- Promotional and bundling messages may live on a single 5x7 easel sign that replaces one product platform within your display.

  Note: *You must first partner with Best Buy's Space team to confirm your presentation can accommodate an easel.*
- The easel must be placed directly to the right of the product to which the promotion applies. If the promotion is applicable to all displayed products, the easel must be located at the far right of the presentation.
- To ensure it does not shift, the easel must be physically attached to the shelf. (Recommended: A removable plastic clip attached to the shelf's perforated pattern.)



Last Updated August 12, 2026 8:20 AM | Best Buy partner and internal use only. Do not copy, publish, or distribute. The material in this document is confidential to Best Buy.

Kitchen Endcaps

Overview

The Kitchen Endcap is intended to create consistent and cost-effective presentation opportunities for vendors.

Two variations exist:

Range Endcap
Kitchen Set Endcap

Best Buy owns the core fixture components.

The vendor owns their display product, logo header shell, graphic panels and POP graphics.

**Drawings and models of all parts available upon request.*

Range Endcap

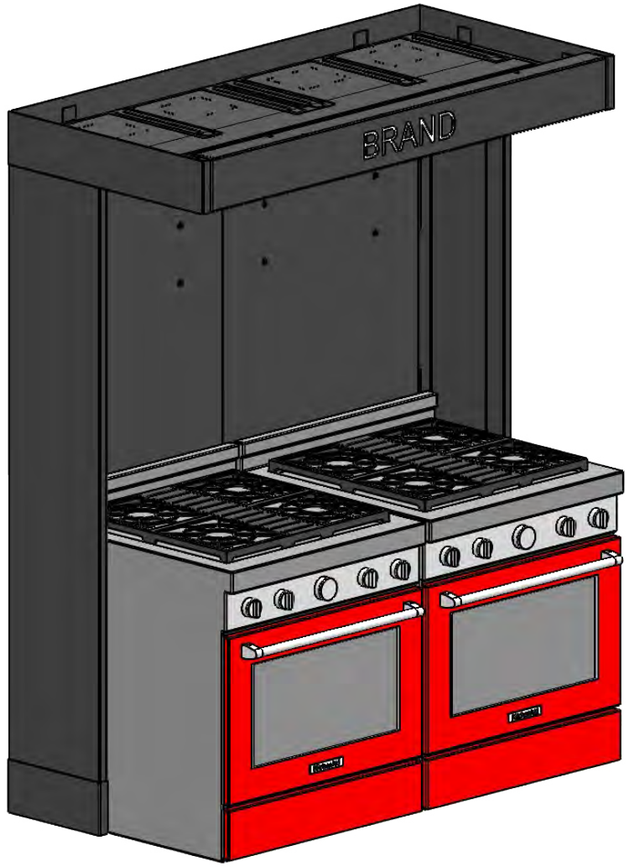

Kitchen Set Endcap

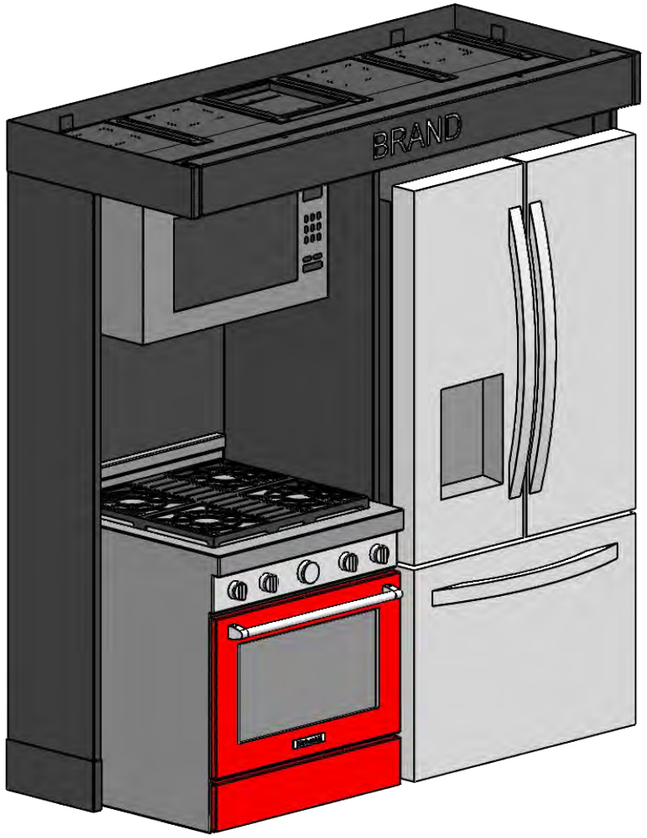

Last Updated August 12, 2026 8:20 AM | Best Buy partner and internal use only. Do not copy, publish, or distribute. The material in this document is confidential to Best Buy.

Fixture Dimensions

Range Endcap

Size: 63.4”W x 79”H x 14”D (leg depth)

Kitchen Set Endcap

Size: 72.5”W x 79”H x 14”D (short), 26”D (long)

**Drawings and models of all parts available upon request.*

Range Endcap

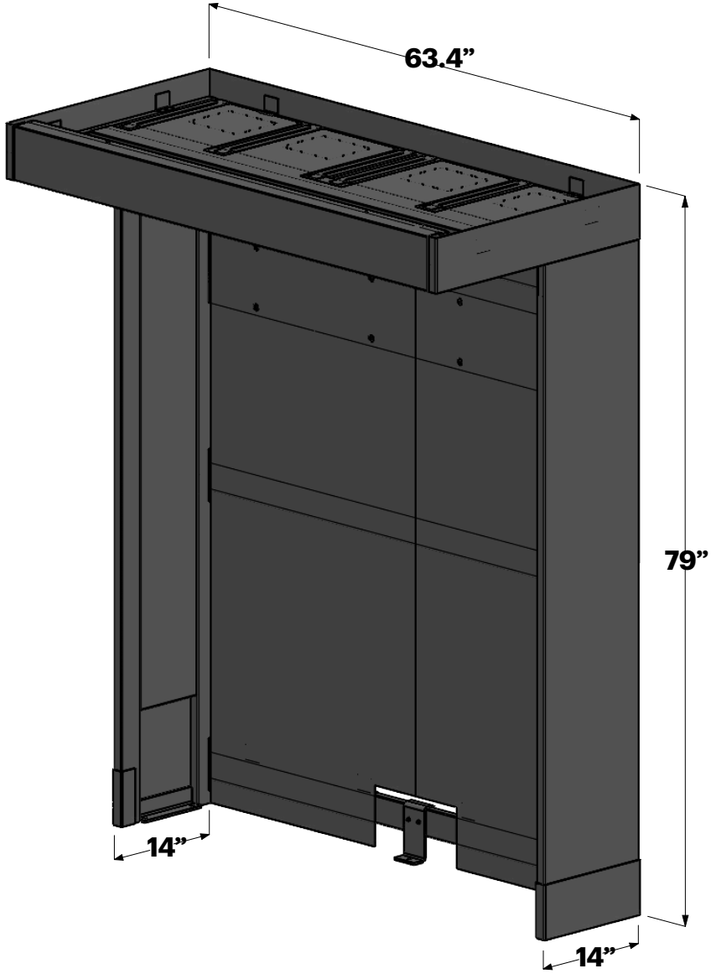

Kitchen Set Endcap

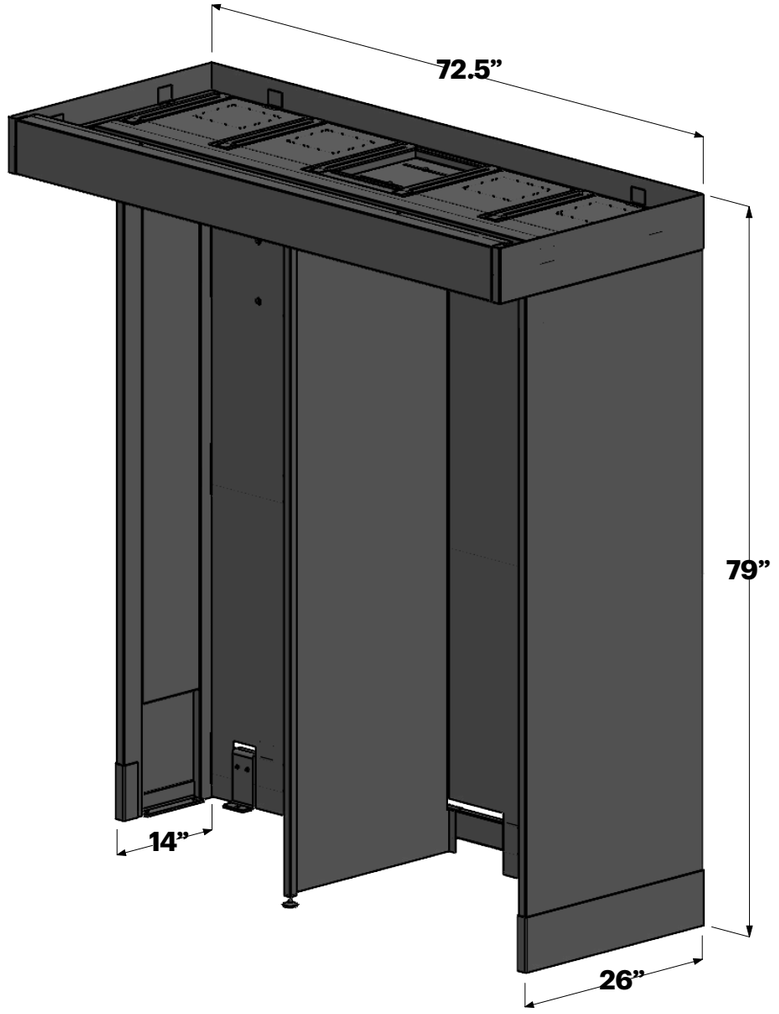

Last Updated August 12, 2026 8:20 AM | Best Buy partner and internal use only. Do not copy, publish, or distribute. The material in this document is confidential to Best Buy.

Logo Header Shell

Vendor Expectations

- Produce a logo header shell that attaches to the Best Buy fixture.

  Note: *Best Buy will provide the enclosed LED array for the header shell.*

  Logo/logotype size: 3”H maximum, centered

  Logo/logotype finish: White light, white optics 009 matte finish

  Header material/finish: Mild Steel, Powder Coat - PC938 MATTE BLACK – IFS COATINGS, INC PLSM10812CN

  Note: *Acceptable alternate material/finish is Alusign 3mm ACM, .2mm Aluminum Black/X.*



Range Endcap

Size: 60.861”W x 6”H

Kitchen Set Endcap

Size: 69.875”W x 6”H

**Drawings and models of all parts available upon request.*

Last Updated August 12, 2026 8:20 AM | Best Buy partner and internal use only. Do not copy, publish, or distribute. The material in this document is confidential to Best Buy.

Graphics:
Panels

Vendor Expectations

- Deploy ***optional*** graphics to tell a cohesive product story.
- Install all graphics before merchandising the space.
- Use imagery that evokes your brand without distracting from your display product.
- Include minimal copy, if desired. Copy must fall at least 3’ above the finished floor and be unobstructed by product.
- Comply with copy, size and substrate requirements below and in the Copy & Claims Guidelines on Partner Portal.
- If an over-the-range microwave will be displayed, the backer graphic must include die-cut mounting holes for screw clearance. The hole positions are included in the graphic dielines found on Partner Portal.

Substrate:

20mil Magnetic Vinyl, White

Size:

Narrow Inside: 12.625”W x 59”H
Top Range Backer: 60.33”W x 44”H
Narrow Outside: 13.75”W x 66.875”H
Top Kitchen Set Backer: 38”W x 44”H
Divider: 24”W x 70”H
Wide Outside: 25.875”W x 66.875”H

- Bespoke vendor-created graphic sizes are also allowed. Please partner with your Best Buy contact for details.

**Drawings and models of all parts available upon request.*

Range Endcap

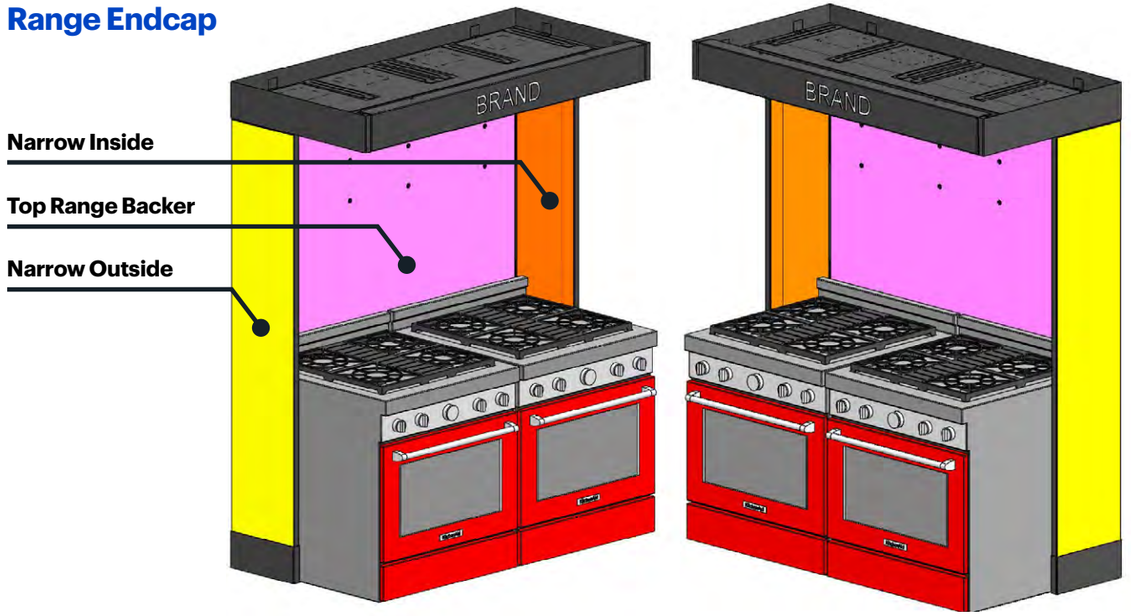

Kitchen Set Endcap

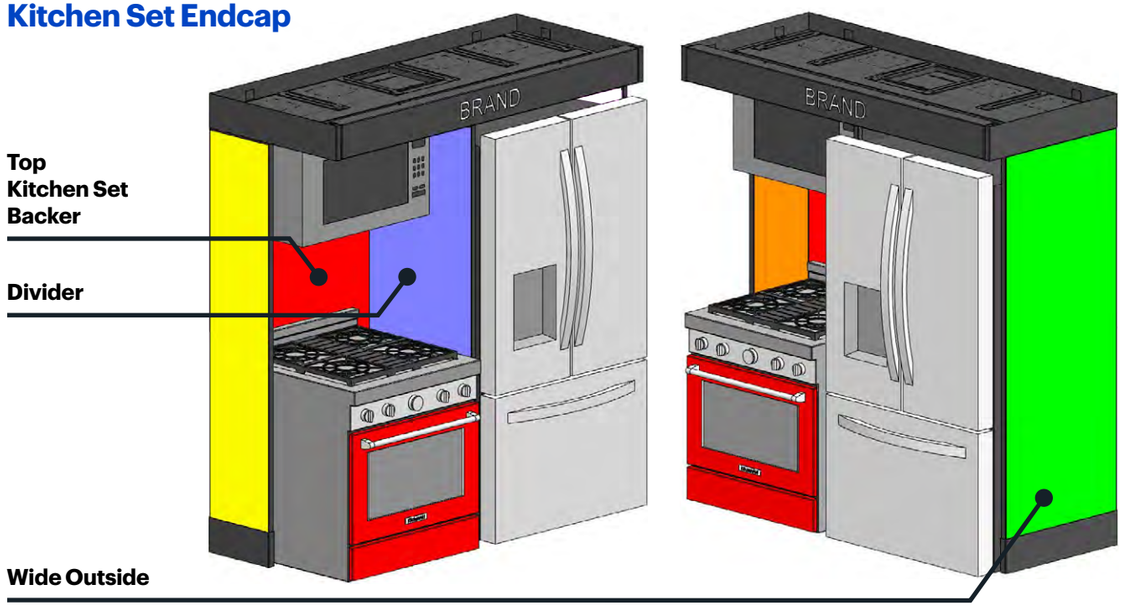

Note: *The following graphics also exist, but may be obstructed by product depending on your merchandising setup. Drawings and dimensions are available upon request.*

— ***Bottom Range Backer***

— ***Bottom Kitchen Set Backer***

— ***Wide Inside***

Endcap visuals without product

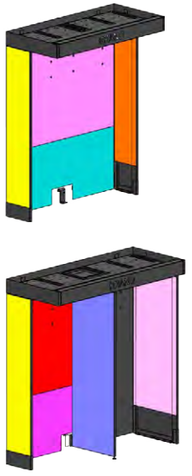

Last Updated August 12, 2026 8:20 AM | Best Buy partner and internal use only. Do not copy, publish, or distribute. The material in this document is confidential to Best Buy.

Graphics:
POP

Vendor Expectations

- Include up to two total external POP graphics on a single product VPP—one on the product top (range only) and/or one on the product front—to highlight features and differentiators.
- Include POP graphics as desired on the product interior, ensuring graphics are not visible until the product is opened.
- Follow Best Buy's Copy & Claims Guidelines in Partner Portal.
- Display overlay clings, if desired, on any screens and/or buttons to simulate a "powered" experience.

Note: *Mock food and freestanding printed food is not permitted. Food imagery on POP graphics is permitted.*

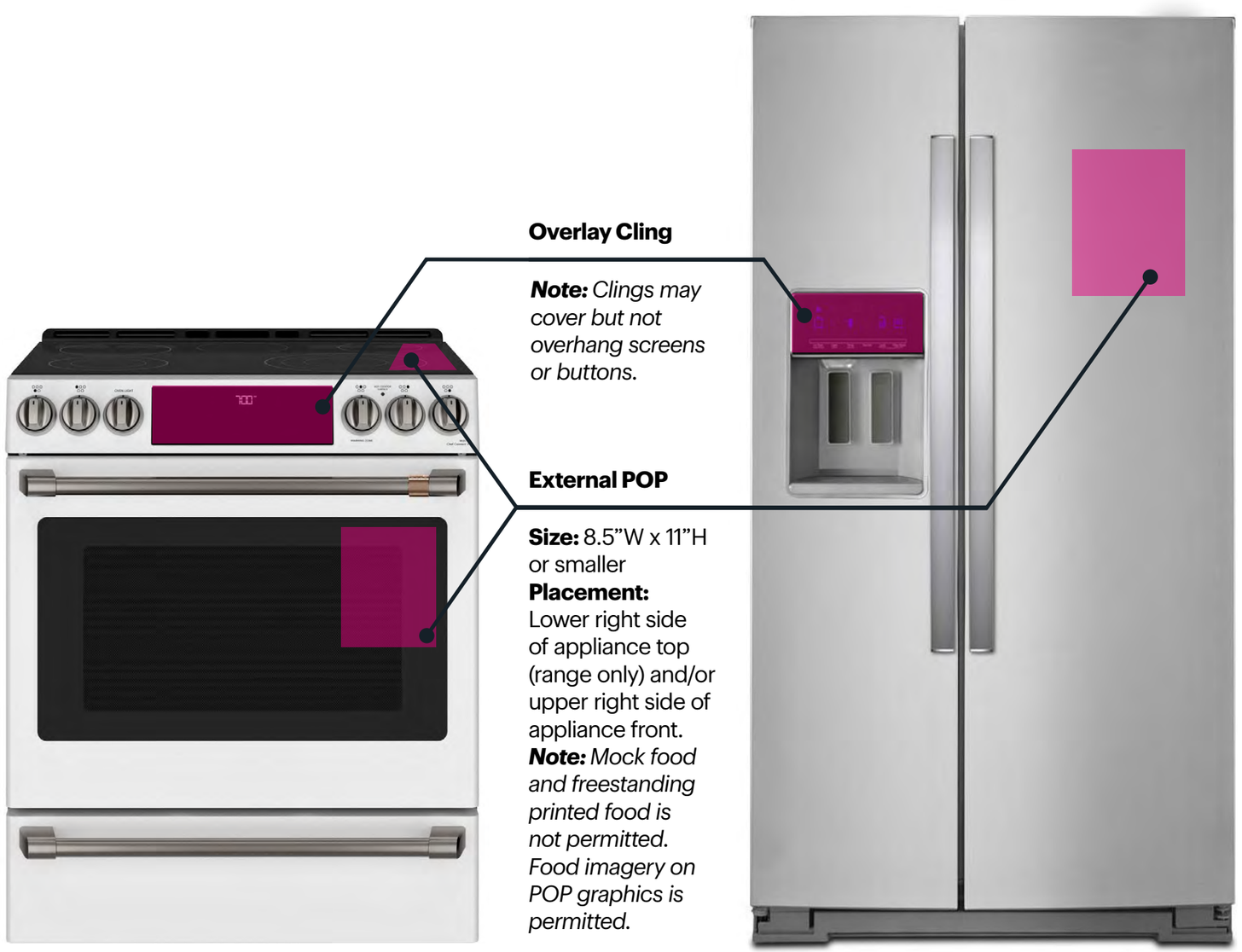

Overlay Cling

Note: *Clings may cover but not overhang screens or buttons.*

External POP

Size: 8.5"W x 11"H or smaller
Placement: Lower right side of appliance top (range only) and/or upper right side of appliance front.
Note: *Mock food and freestanding printed food is not permitted. Food imagery on POP graphics is permitted.*

Find more details and dimensions in this guide on Partner Portal:

Copy & Claims Guidelines

Last Updated August 12, 2026 8:20 AM | Best Buy partner and internal use only. Do not copy, publish, or distribute. The material in this document is confidential to Best Buy.

Merchandising

Vendor Expectations

- Install all graphics before merchandising the space.
- Situate products against the back of the fixture to minimize protrusion.
- Support all products with a fact tag-sized Electronic Shelf Label (ESL), attached on the top left of the doors.
- Use an over-the-range mounting kit (part #1024990) if displaying a microwave.

  Note: *Microwaves are permitted in the Kitchen Set Endcap. Ask your Best Buy contact for prior approval to include a microwave in the Range Endcap.*

Range Endcap

- Display your product(s) according to one of the visuals below; singular products must be centered.



Extra Wide Single



Double

Note: *If your product requires a unique merchandising accommodation, ask your Best Buy contact about your options.*

Kitchen Set Endcap

- Display your products according to the visual below.



Find more details and dimensions in this guide on Partner Portal:

ESL Pricing

Last Updated August 12, 2026 8:20 AM | Best Buy partner and internal use only. Do not copy, publish, or distribute. The material in this document is confidential to Best Buy.

Fixture Parts

Refer to the part numbers below when ordering any necessary components:

Fixture Component	Best Buy Part Number
Range Endcap	1024389
Kitchen Set Endcap	1024390
Vendor Header Assembly, Range Endcap	1025652
Vendor Header Assembly, Kitchen Set Endcap	1025651
Over-the-Range Mounting Kit, Appliance Endcaps	1024990

Last Updated August 12, 2026 8:20 AM | Best Buy partner and internal use only. Do not copy, publish, or distribute. The material in this document is confidential to Best Buy.

Lighting

Overview

Lighting guidelines help create consistent, focused, customer-centric experiences in stores. They ensure product remains focal, reduce unwanted attention on empty or unkempt fixtures, and prevent over-stimulation.

> ***Note:*** *Because the perception of light varies, the VPP Review Committee reserves the right to require lighting adjustments beyond the standard guidelines to guarantee an optimal visual experience for customers.*

Vendor Requirements

- Use lighting to enhance—never distract from or diminish—display product.
  Note: *For products displayed on acrylic risers/shelves, diffuse lighting along the edges to prevent brightness levels that distract from the product.*
- Ensure lights do not flash, blink or strobe for the safety of those with light sensitivities and risk of seizure.
- Set all white lights at the required color temperature of 5,500K.
- If using buttons to start a lighting demo, use only the approved button detailed in the Universal Button Vendor Guidelines on Partner Portal. If illuminating the buttons, adhere to the Technology Design Standards on Partner Portal.
- Provide all available lighting details during Stage Gate 2 of the VPP submission process—Pre-Prototype VPP Review.
- Provide all lighting electronics before Stage Gate 3 of the VPP submission process—Physical Prototype Review.

Find more details and dimensions in these guides on Partner Portal:

Universal Buttons

Technology Design Standards

Lowbay Gondola Total Activation

Presentation Types

Inline: 2,000–3,000 LUX
Lit logos on headers and light emitted by display products and monitors are permitted. Additional lighting opportunities may exist for inline presentations 4’ or wider. Refer to Lowbay Gondola Total Activation Guideline for details.

Endcap: 2,000–5,000 LUX
Uplighting, fixture edge soft ambient lighting, lit logos on headers, and light emitted by display products and monitors are permitted. All other forms of lighting are not permitted.

Perimeter Wall: 4,000–7,000 LUX
Lit logos on headers, lit subheads, and light emitted by display products and monitors are permitted. All other forms of lighting are not permitted.

Vendor Home: 2,000–5,000 LUX
Uplighting, shelf lighting, backlighting, fixture edge soft ambient lighting, lit logos on headers, and light emitted by display products and monitors are permitted. All other forms of lighting are not permitted.

Note: *Downlighting, in-case lighting and lighting behind glass or acrylic is not permitted for any presentation type.*

Last Updated August 12, 2026 8:20 AM | Best Buy partner and internal use only. Do not copy, publish, or distribute. The material in this document is confidential to Best Buy.

Product-Specific Guidelines

Light Bulbs

Vendor Requirements

- If your demonstration is controlled through an app or panel, follow the network requirements outlined in the Technology Design Standards on Partner Portal.
- Ensure lights do not begin at full brightness during the demonstration.
  Note: *Approx. 35–50% of a 60-watt bulb is the approved starting brightness.*
- Cover display bulbs with an acrylic case to prevent touching from shoppers.
  Note: *The acrylic case must feature airflow vents to prevent overheating.*
- Ensure light bulb components do not reach temperatures above 80°F.

Products with Color-Changing Lights

In select situations (i.e. party speakers, gaming accessories, etc.), color-changing lights ***may be permitted***. This is determined on a case-by-case basis by the VPP Review Committee and is subject to change.

Vendor Requirements

- For products with color-changing lights, present your demo in one of two ways:
  1) A steady, unchanging color
  2) A pattern that slowly rolls through colors
- For option 2, ensure your product shows one color for 5 seconds before transitioning into the next color over 2 seconds, and so on.
  Note: *Colors must not flash, blink or strobe to ensure the safety of those with light sensitivities and risk of seizure.*

Last Updated August 12, 2026 8:20 AM | Best Buy partner and internal use only. Do not copy, publish, or distribute. The material in this document is confidential to Best Buy.

Lighting Testing Parameters

All lighting tests are performed with Dr. Meter LX1332B.

Vendor Requirements

- Measure luminescence where a customer visibly sees the illumination.
- If a light emitter is visible, directly measure the light itself.
- If a light emitter is recessed or hidden from the eye, measure the illuminated surface.
- Measure larger illuminated areas across the entire surface.





Illuminated logo measures 4800 lux on the ‘N,’ indicating a pass. However, the ‘D’ measures at 6800 lux, which does not pass.

Last Updated August 12, 2026 8:20 AM | Best Buy partner and internal use only. Do not copy, publish, or distribute. The material in this document is confidential to Best Buy.

Lighting Testing Parameters (Continued)



Light emitters are hidden and illumination is projected on the visible surface, so the reflection of light is measured.



Light projected out of a shadowbox.



Blue light through a diffuser.

Last Updated August 12, 2026 8:20 AM | Best Buy partner and internal use only. Do not copy, publish, or distribute. The material in this document is confidential to Best Buy.

Lighting Testing Parameters (Continued)





Example of light emitter “hidden” from the primary viewing angle. However, the emitter is visible from certain customer angles requiring direct measurement on the emitter.

Last Updated August 12, 2026 8:20 AM | Best Buy partner and internal use only. Do not copy, publish, or distribute. The material in this document is confidential to Best Buy.

Lowbay Gondola

Overview

The lowbay gondola fixture is comprised of inline and endcap spaces, each of which invites you to tell an enhanced story in the way that best suits your product.

It exists in two depths (measured by their base decks):
- 24” standard lowbay gondola
- 14” skinny lowbay gondola

This document focuses on inline displays only.
For endcap displays, please see the Lowbay Gondola Endcap Vendor Guidelines on Partner Portal.

Inline space

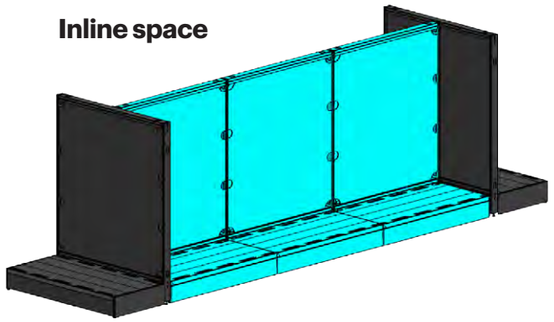

Standard Lowbay Gondola
24”D base deck

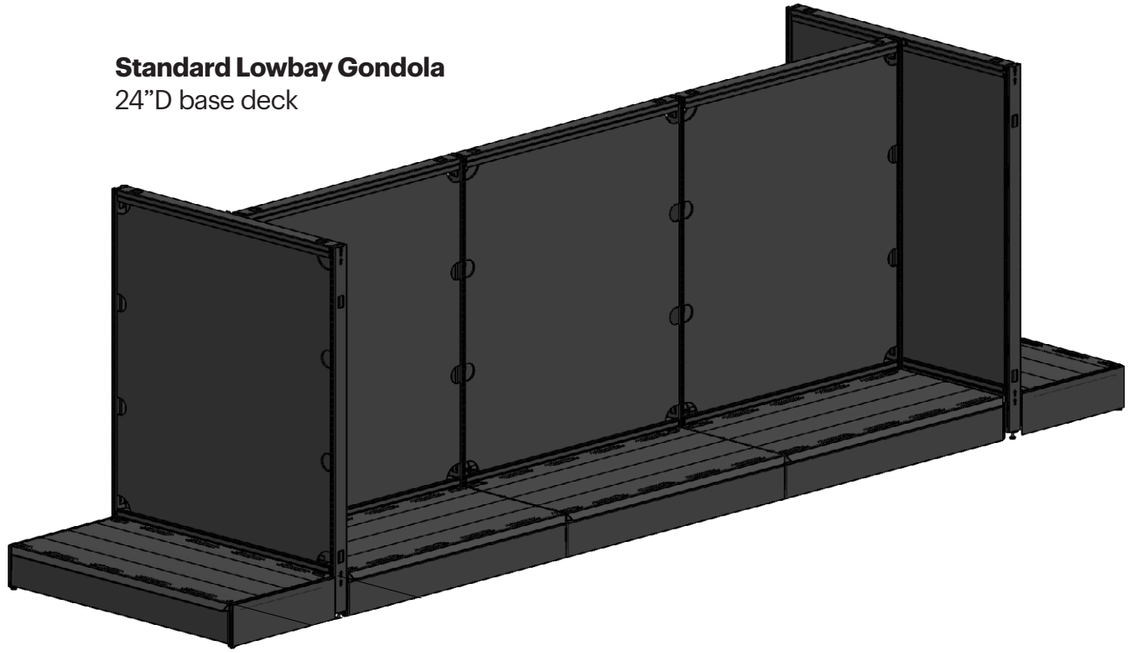

Skinny Lowbay Gondola
14”D base deck

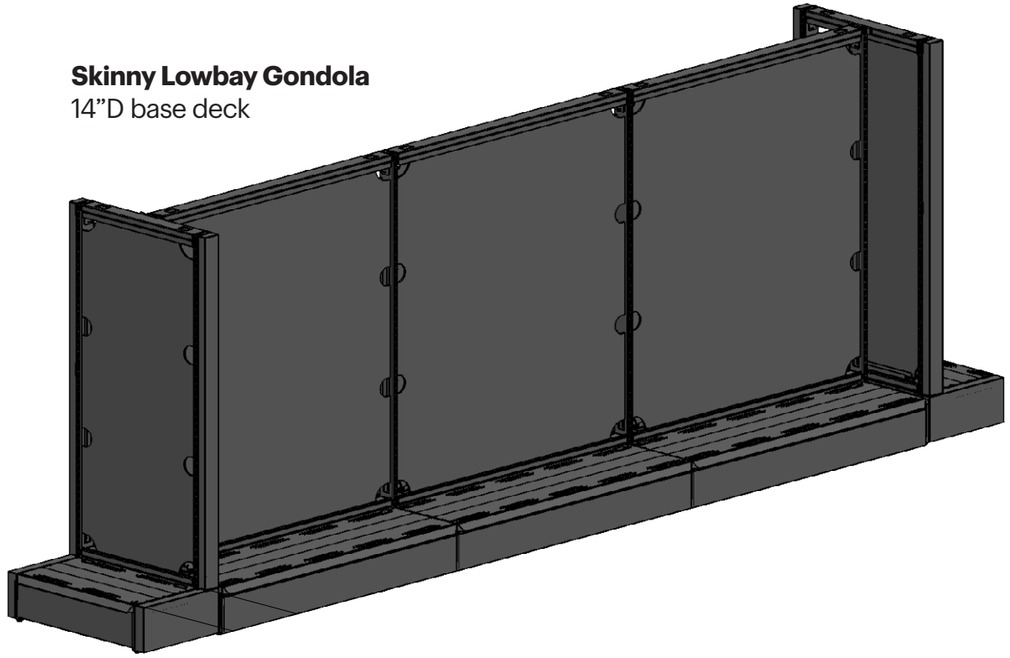

Last Updated August 12, 2026 8:20 AM | Best Buy partner and internal use only. Do not copy, publish, or distribute. The material in this document is confidential to Best Buy.

Display Types

Three display types exist on the lowbay gondola fixture. Your Best Buy contact will tell you which of the following to leverage for your display:

- **Inline Focal and Platform.** Inline focals and platforms give your products added height and create a clean and uncluttered presentation. Video, imagery and direct-to-product power attract extra attention.
- **L-Shaped.** Modular parts allow for easy customization while an accessible fixture base houses and hides electrical components.
- **Total Activation (Takeover).** Large products stand tall and proud as the hero of the space, backed by a large and enticing graphic. No shelves or fixture accessories are needed.

See the corresponding guideline document on Partner Portal for further details on the display of your choice.

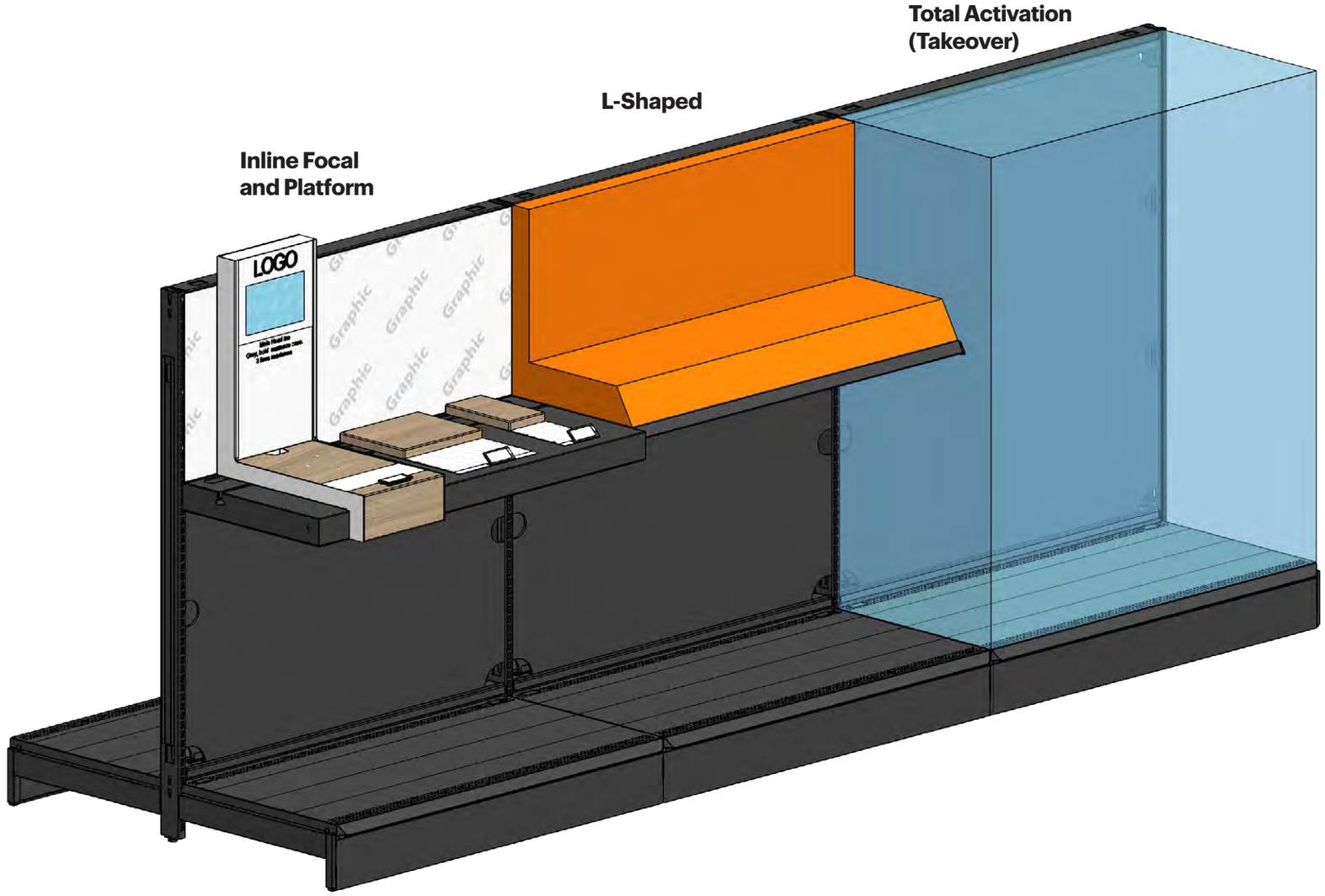

Find more details and dimensions in these guides on Partner Portal:

Inline Focal and Platform

L-Shaped

Lowbay Gondola Total Activation

Last Updated August 12, 2026 8:20 AM | Best Buy partner and internal use only. Do not copy, publish, or distribute. The material in this document is confidential to Best Buy.

Shelf Types

Many shelf sizes/types exist on lowbay gondolas:

- 12” Skinny Universal
- 20” Universal
- 12” Skinny Standard
- 18” Standard
- 22” Standard

Different shelf types have different attachment methods, as shown at right.

You may encounter one or more of these shelves in your display. Ask your Best Buy contact for specifics.

Universal Shelf Depths

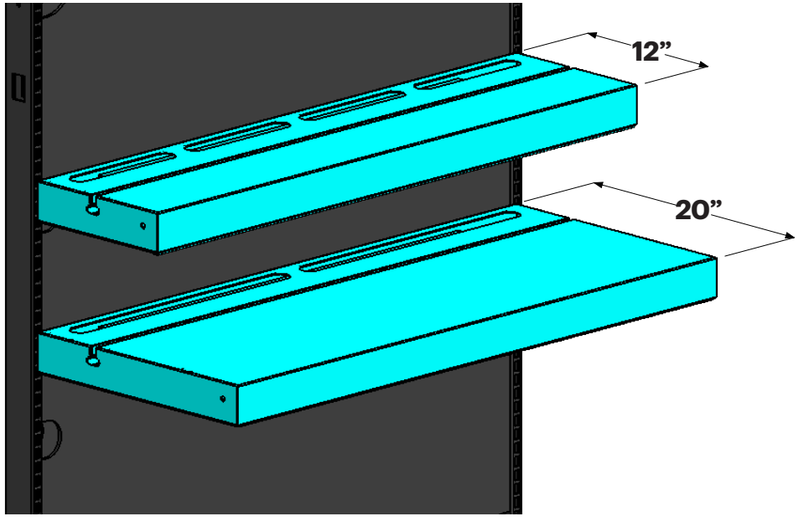

Universal Shelf Attachment

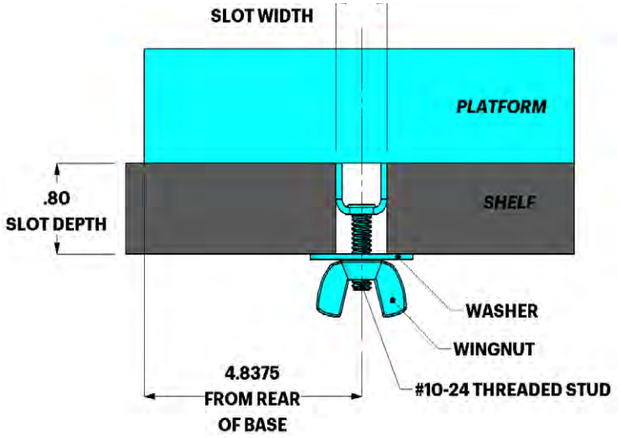

Standard Shelf Depths

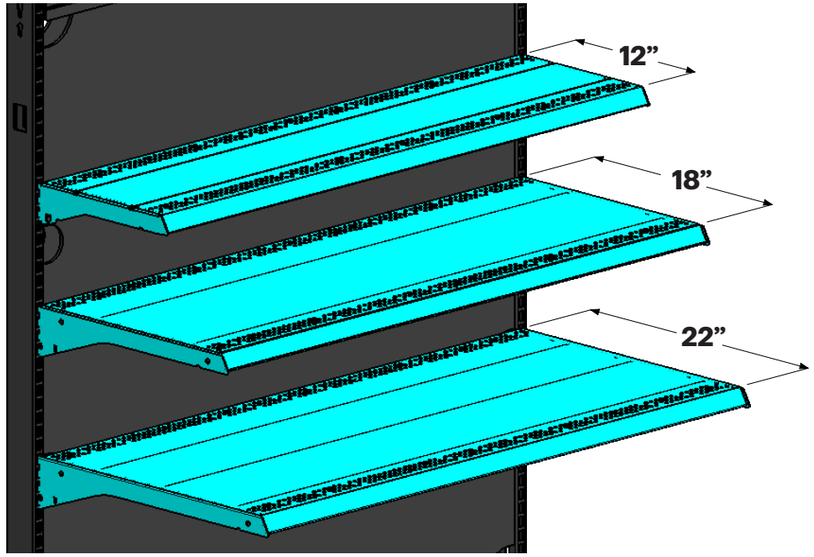

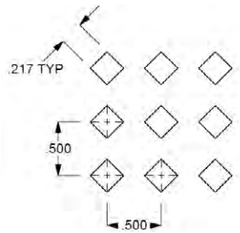

Diamond Perforation Pattern

Standard Shelf Attachment

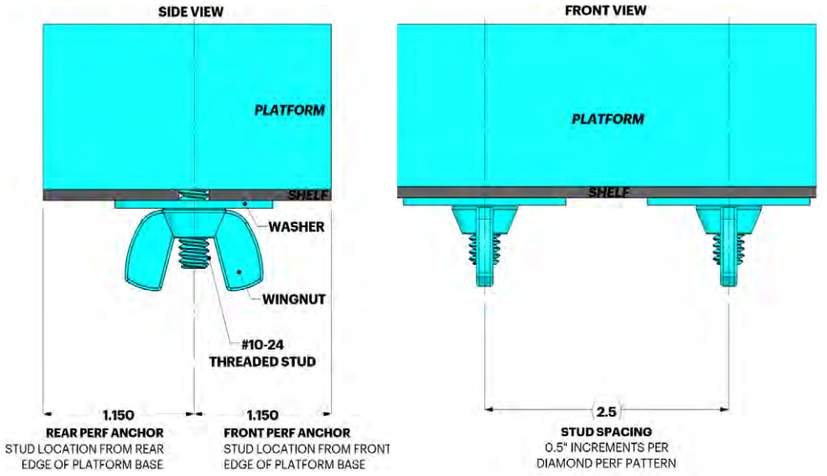

Last Updated August 12, 2026 8:20 AM | Best Buy partner and internal use only. Do not copy, publish, or distribute. The material in this document is confidential to Best Buy.

Power

Power access varies depending on the applicable shelf type, as shown at right. For either type, ensure your electronics are labeled and color-coded and can be accessed without tools for easy replacement.

Universal Shelves

- Power access is contained within the shelf.
- Route power through the large power access slots.
  - — A power strip is accessible through a trap door on the underside of the shelf. Your power supply must fit this strip, which cannot be moved.
  - — Additional power strips must plug into a power outlet. Power strips cannot be daisy-chained.

Standard Shelves and Takeover Displays

- Power access is located in one of the lowbay inline base decks within 12'.
- Route power cords (12'L minimum) off the rear of the shelf, through the mouse holes in the backer panels and into the base deck.

Universal Shelves

Power Pass-Through on Shelf

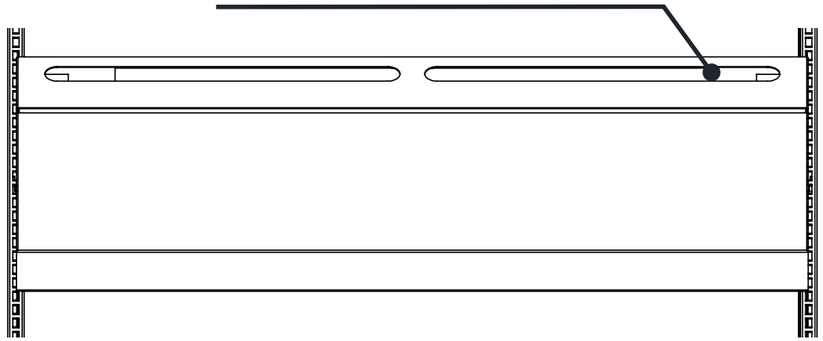

Power Strip Access through Trap Door

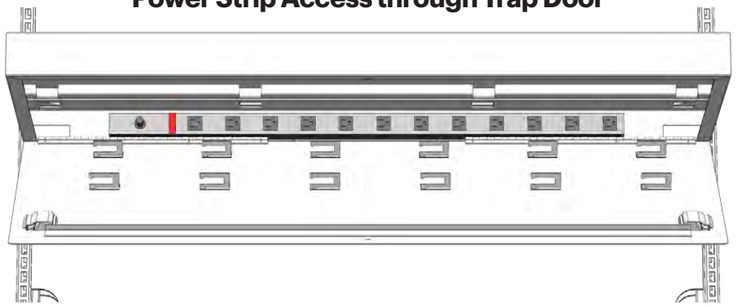

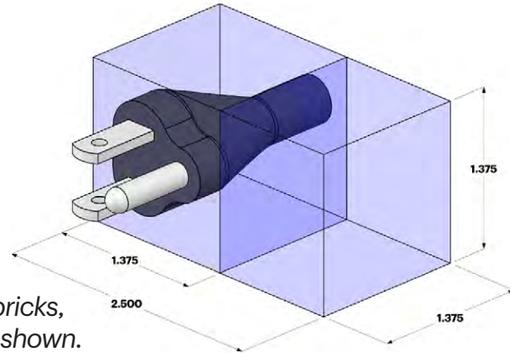

Maximum Dimensions for Universal Shelf Plug
Note: *In the case of power bricks, prongs must be oriented as shown.*

Standard Shelves and Takeover Displays

Power Pass-Through on Backer

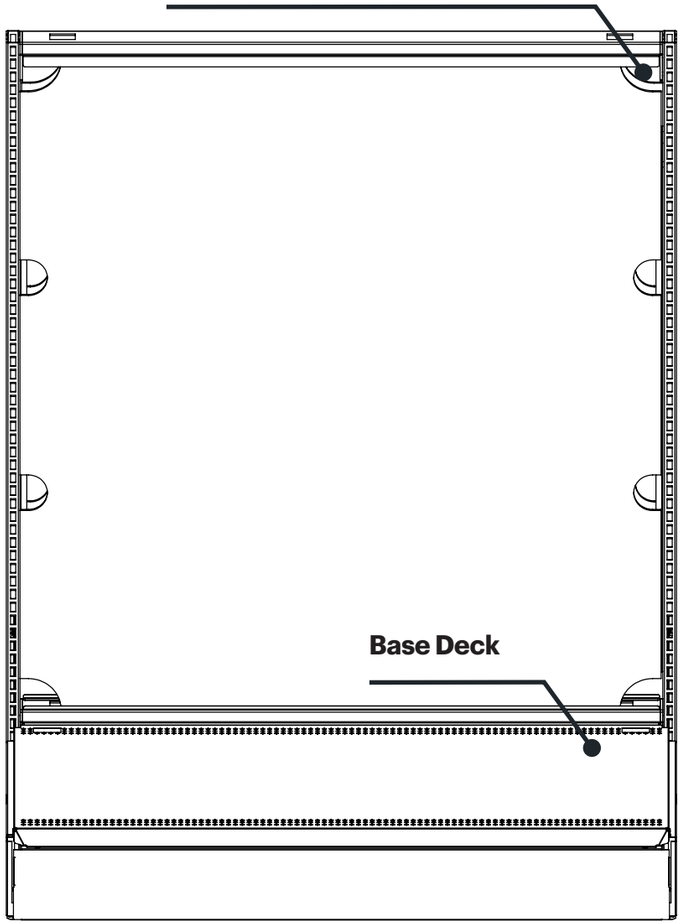

Last Updated August 12, 2026 8:20 AM | Best Buy partner and internal use only. Do not copy, publish, or distribute. The material in this document is confidential to Best Buy.

Integrated Technology

Integrated technology must align with the Technology Design Standards on Partner Portal. Best Buy's Technology Design Lab must approve any working electrical components, including illuminated logos, media players, etc.

Lighting

- Downlighting, in-case lighting and lighting behind glass or acrylic is not permitted.
- Lit logos on headers and illumination emitted from display products and monitors are permitted. Additional lighting opportunities may exist for inline presentations 4' or wider. Refer to Lowbay Gondola Total Activation Guideline for details.

Buttons

- Interactive buttons are permitted as follows:
  - — Duco DTPB-X-32 (only approved button)
  - — Surrounded by a white light-up ring
  - — Shown with text that clearly defines the button action. Text must be:
    - — Black, size 14, Human BBY Medium
    - — Located below the button
    - — Printed on the substrate (no decals)

Merchandising

- Ensure product does not extend wider than fixture edges or higher than fixture height.
- Support all products with a proximally located peg label-sized Electronic Shelf Label (ESL).
- Design modular display components to ensure easy replacement when products change.
- Include your choice of Demo, Display or Dead Mock Display product(s).
  - — **Demo:** An out-of-box product feature that allows for an interactive experience.
  - — **Display:** A non-interactive product included to show materiality, form factor, colorways and sizing.
  - — **Dead Mock Display:** A non-interactive 3D model of salable product intended to show form factor, colorways and sizing.

Note: *Printed representational stand-ins of products are not permitted.*

Graphics

- Provide required graphics for your chosen display type, complying with all copy, design, size, substrate, etc. requirements outlined in the related guide on Partner Portal (see below).

Find more details and dimensions in these guides on Partner Portal:

Technology Design Standards

Inline Focal and Platform

L-Shaped

Takeover

Lowbay Gondola Total Activation

Last Updated August 12, 2026 8:20 AM | Best Buy partner and internal use only. Do not copy, publish, or distribute. The material in this document is confidential to Best Buy.

Fixture Parts

Refer to the part numbers below when ordering any necessary components:

Fixture Accessory	Best Buy Part Number
Standard Shelf — Black, 10.5”D	1016891
Standard Shelf — Black, 12”D	1014797
Standard Shelf — Black, 14”D	1012248
Standard Shelf — Black, 18”D	1012249
Standard Shelf — Black, 22”D	1012251
Skinny Universal Shelf, 12”D	1020948
Universal Shelf, 20”D	1003529
Merchandise Bar — Black, 1.5”D (standard depth)	1010753
Merchandise Bar — Black, Heavy Duty, 1.5”D (standard depth)	1010634
Merchandise Bar — Black, Extended 6”	1010744
Merchandise Bar — Black, Extended 8”	1010750
Merchandise Bar — Black, Extended 10”	1010625
Peg Hook — Heavy Duty, 8”L	1010659
Peg Hook — Heavy Duty, 12”L	1010643
Peg Hook — Heavy Duty, 16”L	1010642
Peg Hook, 4”L	1010717
Peg Hook, 8”L	1010754
Peg Hook, 16”L	1010621

Fixture Assembly	Best Buy Part Number
Backer Graphic Assembly	1003485
Skinny Lowbay Gondola Assembly (14” base deck)	R0019
Standard Lowbay Gondola Assembly (24” base deck)	R0010

Last Updated August 12, 2026 8:20 AM | Best Buy partner and internal use only. Do not copy, publish, or distribute. The material in this document is confidential to Best Buy.

Lowbay Gondola Endcap

Overview

Lowbay gondola endcaps are a standout space for you to tell a compelling brand story in your own voice.

This document focuses on endcap displays only.
For inline displays, please see the Lowbay Gondola Vendor Guidelines on Partner Portal.

Vendor Expectations

- Excite customers with an easy, intuitive experience.
- Ensure space and fixtures are ADA-compliant.
- Use simple messaging that does one of three things:
  1) **Inspires.** Strikes an emotional chord.
  2) **Engages.** Connects a key benefit to the customer.
  3) **Educates.** Gives product features and relevant information needed to make a decision.

**Drawings and models of all parts available upon request.*

Endcap space

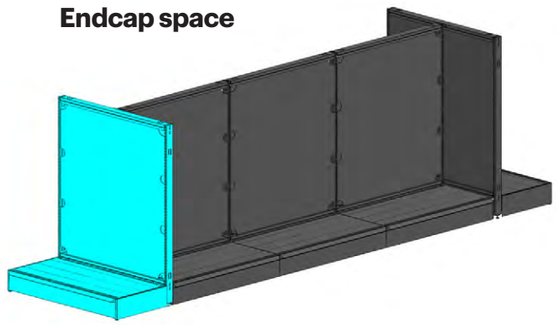

Standard Lowbay Gondola
24”D base deck

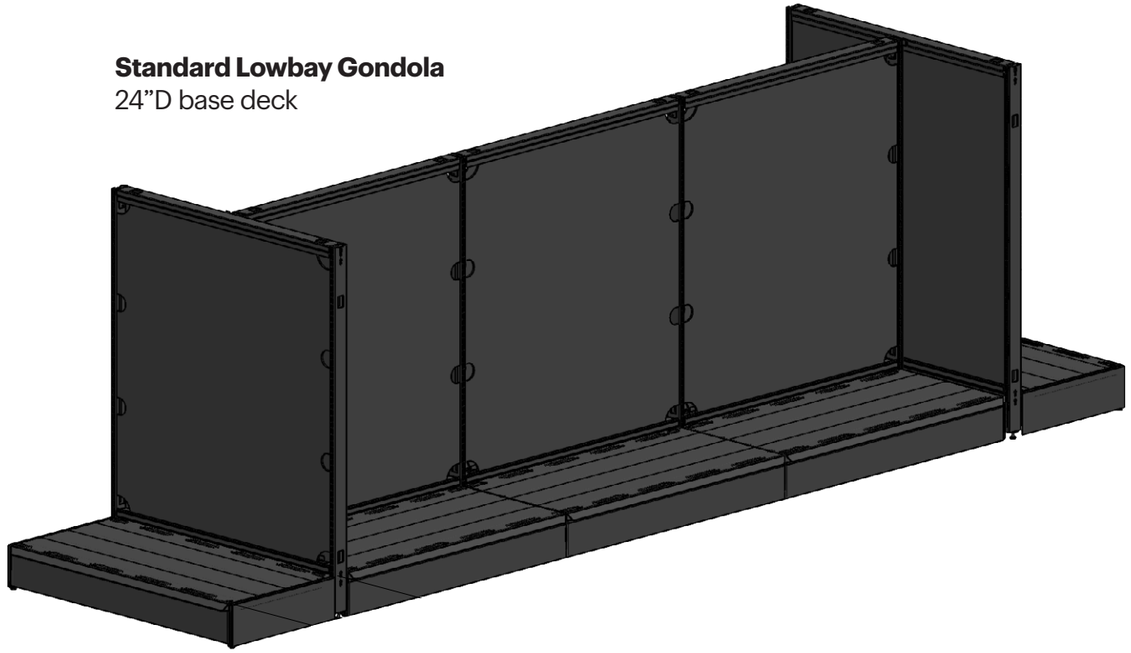

Skinny Lowbay Gondola
14”D base deck

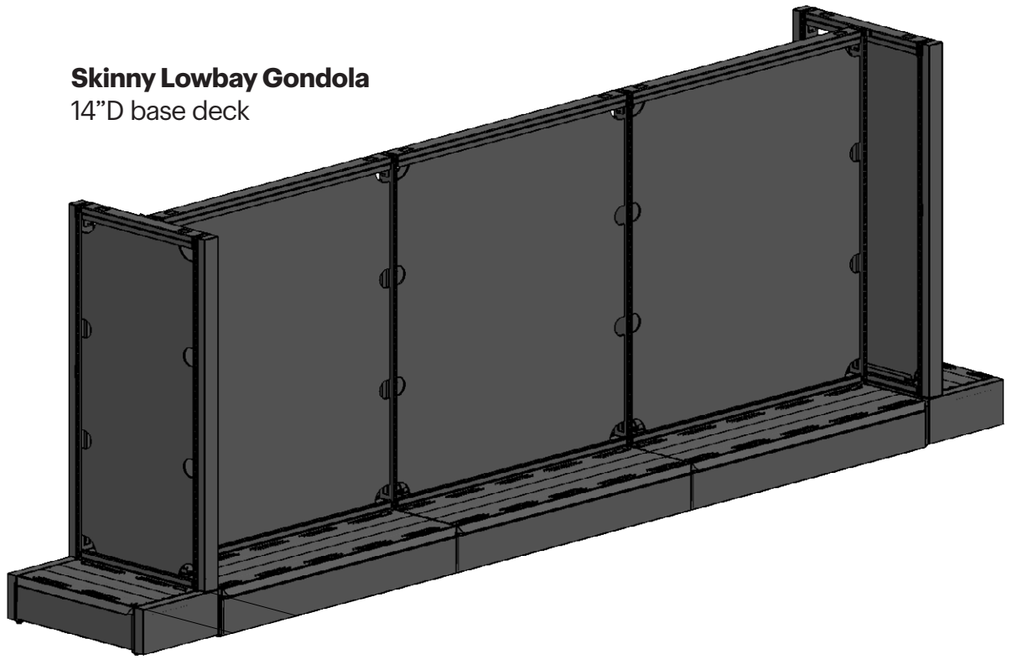

Last Updated August 12, 2026 8:20 AM | Best Buy partner and internal use only. Do not copy, publish, or distribute. The material in this document is confidential to Best Buy.

Fixture Varieties

Lowbay gondola endcaps exist in two widths: 2’ and 4’. Each store has one or both of these widths. Ask your Best Buy contact which scenarios apply to your display.

Note: *Endcap base deck depths may be referred to as 14” and 24” respectively. Dimensions shown on the right pertain to the merchandisable areas.*

2’ Endcap

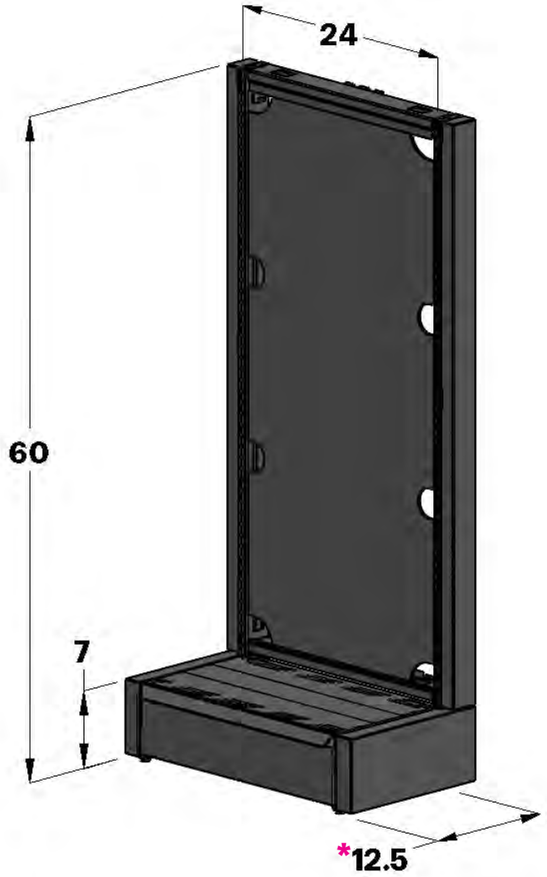

4’ Endcap

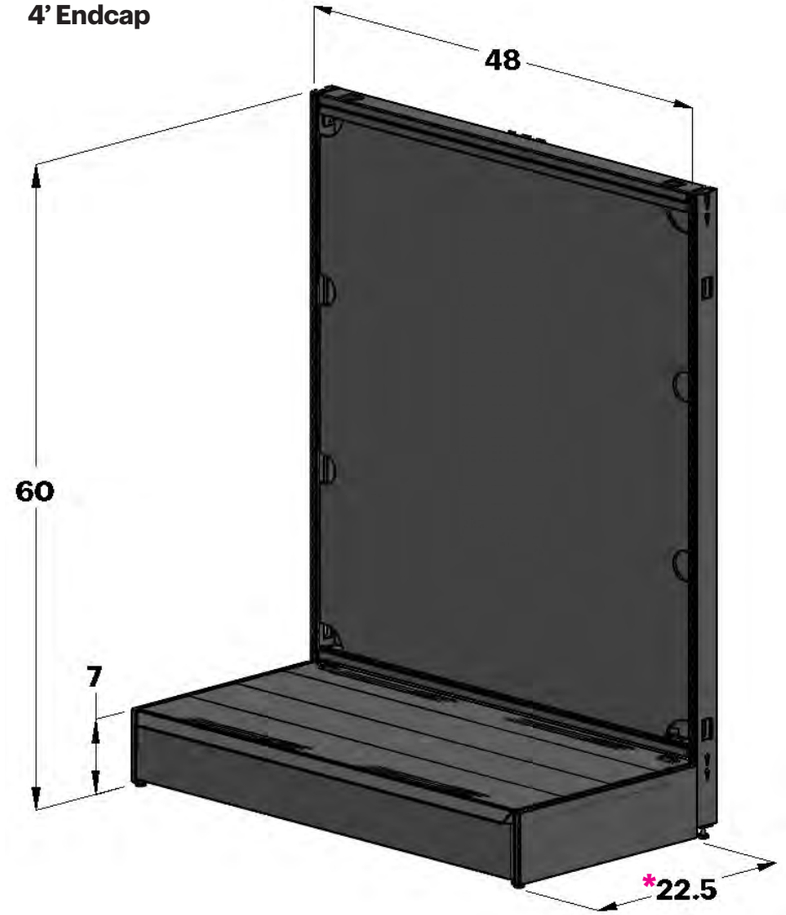

Note: *Base deck depths may vary. Ask your Best Buy contact for details.*

Last Updated August 12, 2026 8:20 AM | Best Buy partner and internal use only. Do not copy, publish, or distribute. The material in this document is confidential to Best Buy.

Fixture Accessories (2’)

The accessories shown are available in a variety of sizes, each designed specifically for use on 2’ lowbay gondola endcaps.

Please ask your Best Buy contact for any part numbers of accessories you’d like to use.

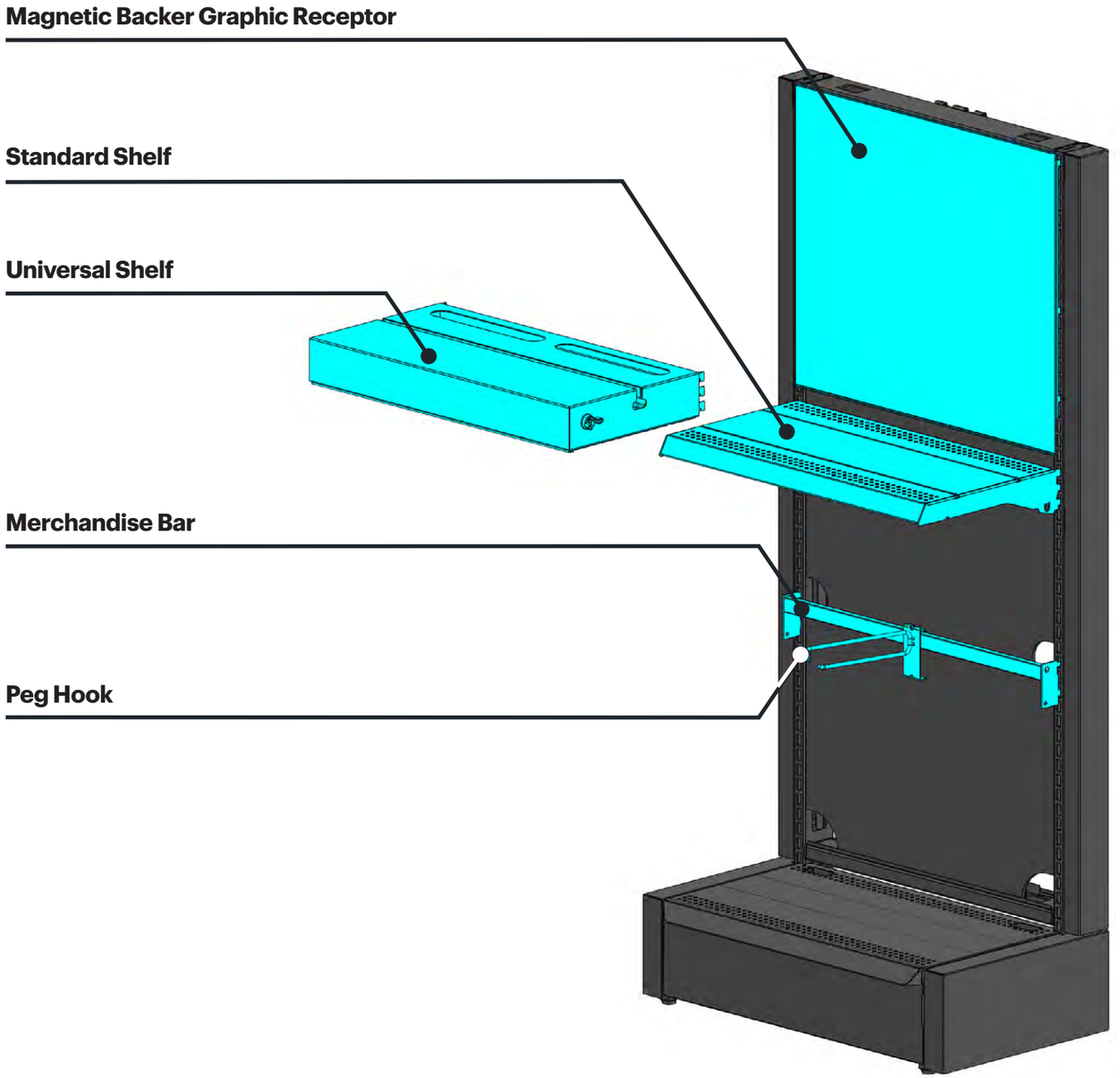

Last Updated August 12, 2026 8:20 AM | Best Buy partner and internal use only. Do not copy, publish, or distribute. The material in this document is confidential to Best Buy.

Fixture Accessories (4’)

The accessories shown are available in a variety of sizes, each designed specifically for use on 4’ lowbay gondola endcaps.

Please ask your Best Buy contact for any part numbers of accessories you’d like to use.

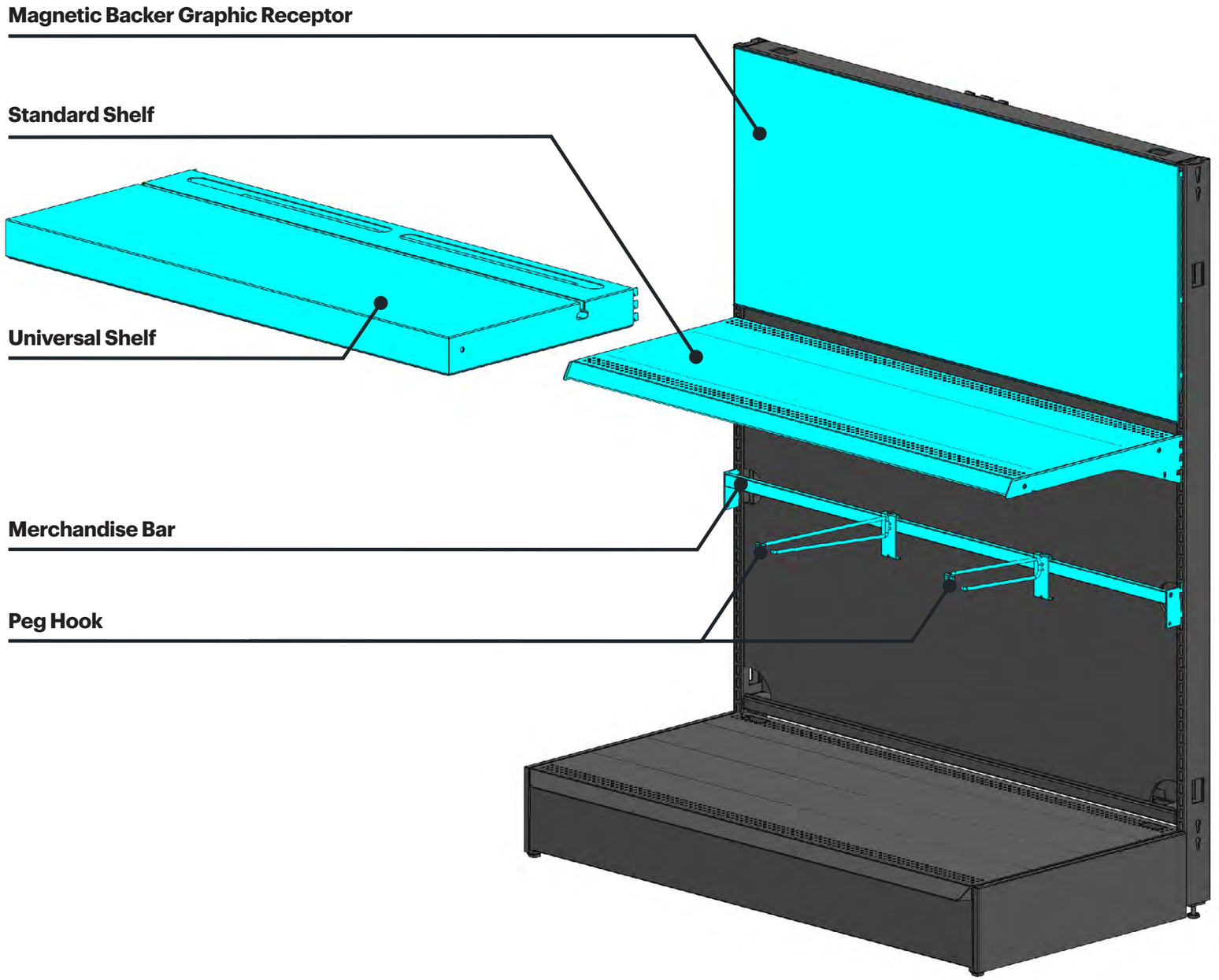

Last Updated August 12, 2026 8:20 AM | Best Buy partner and internal use only. Do not copy, publish, or distribute. The material in this document is confidential to Best Buy.

Power and Attachments

Vendor Expectations

- Securely anchor the display to either the shelf or slotted uprights. (See Best Buy's perforated shelves at right).
- Remove any batteries from the product before displaying.
- Connect all power to a power strip that is directly connected to a power receptacle. Power strips cannot be daisy-chained.
- Secure demo product using approved tethers, recoilers, mechanical fasteners or security devices.
- Purchase electronic security devices from an approved vendor noted in the Technology Design Standards.
- Neatly organize or hide additional power cords, plugs, etc. to avoid clutter and cord drape.
- Use permitted forms of lighting only. No backlighting, downlighting or under-cabinet lighting is permitted. Other forms of lighting—including illumination emitted from display products and monitors—are allowed.

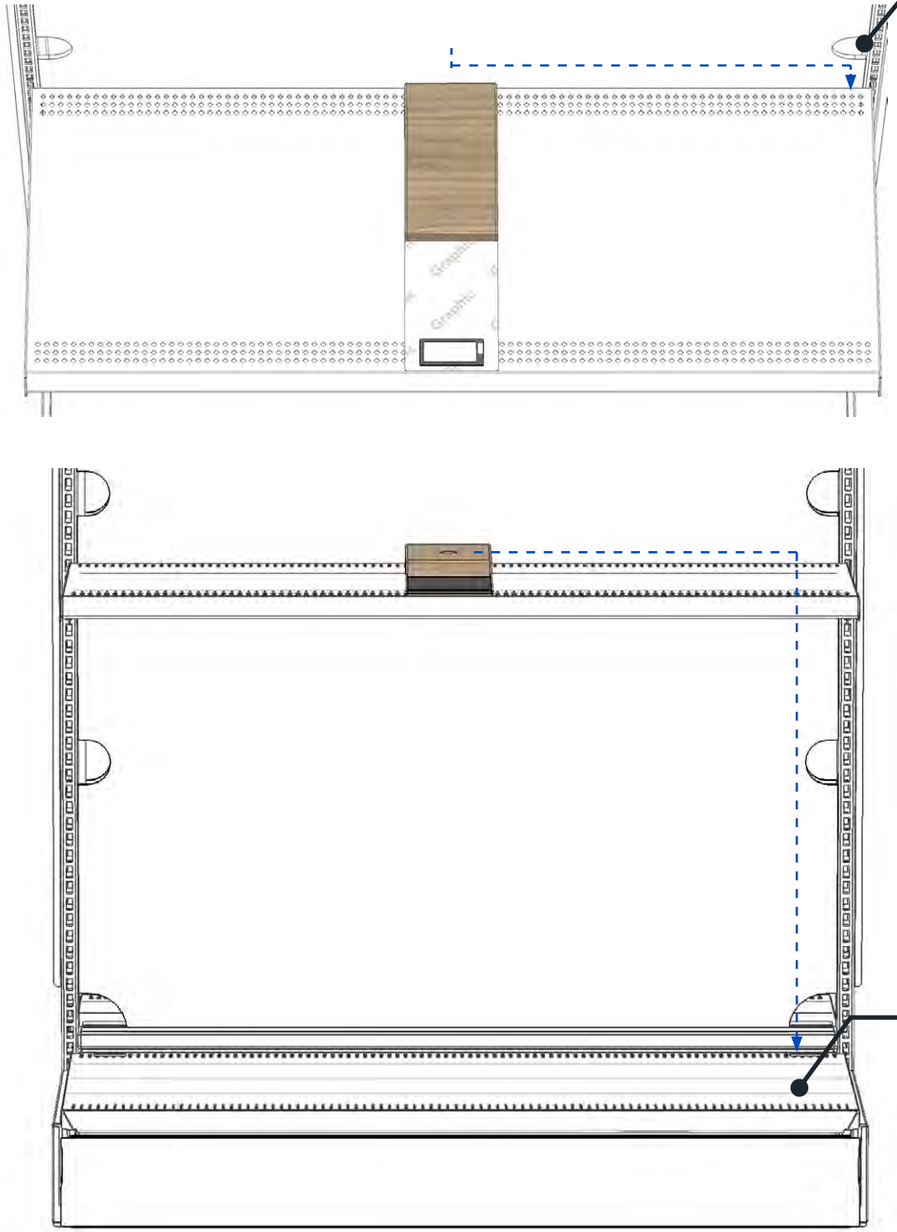

Shelf Anchoring

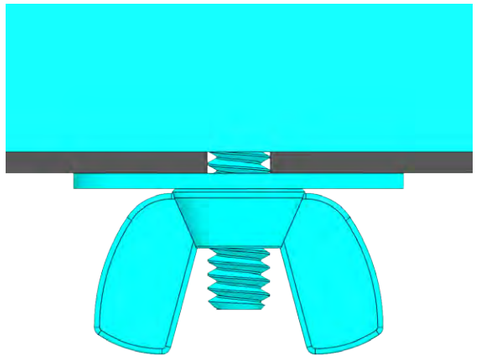

Find more details and dimensions in this guide on Partner Portal:

Technology Design Standards

Last Updated August 12, 2026 8:20 AM | Best Buy partner and internal use only. Do not copy, publish, or distribute. The material in this document is confidential to Best Buy.

Graphics

The size of your graphics will vary based on your choice of merchandising options (see next page). Ask your Best Buy contact for any dimensions needed.

Vendor Expectations

- Display your signage within the width, depth and height (max. 60”) of the endcap fixture.
- Include your logo in the top 6” of your display. Logo may be illuminated, if desired.
- Keep copy a minimum of 20” above the ground.

Best Practices

- Ensure the product is the hero of the presentation; all signage and collateral should act in support.
- Feature each signage element at its most impactful moment of the customer’s journey. (i.e. Copy-heavy signage should fall after a customer’s engagement with the product.)

Find more details and dimensions in these guides on Partner Portal:

Copy & Claims

Vendor Signage

2’ Endcap



4’ Endcap



Last Updated August 12, 2026 8:20 AM | Best Buy partner and internal use only. Do not copy, publish, or distribute. The material in this document is confidential to Best Buy.

Merchandising

Vendor Expectations

- Choose Demo, Display, Dead Mock Display or Velocity merchandising.
  - **Demo:** An out-of-box product feature that allows for an interactive experience.
  - **Display:** A non-interactive product intended to show materiality, form factor, colorways and sizing.
  - **Dead Mock Display:** A non-interactive 3D model of salable product intended to show form factor, colorways and sizing.
  - **Velocity:** A collection of packaged products neatly displayed on pegs or shelves.
- Display your products and signage within the width, depth and height (max. 60”) of the endcap fixture.
- Include an electronic shelf label (ESL) for each product.
- Get approval from Best Buy’s Technology Design Lab for working technology components (audio, video, etc).

Note: *Printed representations of products are not permitted.*



Demo



Display



Dead Mock Display



Velocity

Find more details and dimensions in these guides on Partner Portal:

ESL Pricing

Technology Design Standards

Last Updated August 12, 2026 8:20 AM | Best Buy partner and internal use only. Do not copy, publish, or distribute. The material in this document is confidential to Best Buy.

Fixture Parts

Refer to the part numbers below when ordering any necessary components:

Fixture Assembly	Best Buy Part Number
Dreamstate Endcap with Lowbay	R0005
2’ Lowbay Gondola Endcap with 14” Base Deck	R0017
2’ Lowbay Gondola Endcap with no Base Deck	R0018
4’ Lowbay Gondola Endcap with 12” Base Deck	R0006
4’ Lowbay Gondola Endcap with 24” Base Deck	R0007
4’ Lowbay Gondola Endcap with no Base Deck	R0008

Last Updated August 12, 2026 8:20 AM | Best Buy partner and internal use only. Do not copy, publish, or distribute. The material in this document is confidential to Best Buy.

Lowbay Gondola Total Activation

Overview

The lowbay gondola total activation allows sizable products to stand tall and proud as the hero of the space, backed by a large and enticing graphic. No shelves or fixture accessories are required.

A vendor deploying a takeover display must outfit the entire 4’ section from the top of the fixture to the base deck, including graphics and any fixture components needed to elevate their display.

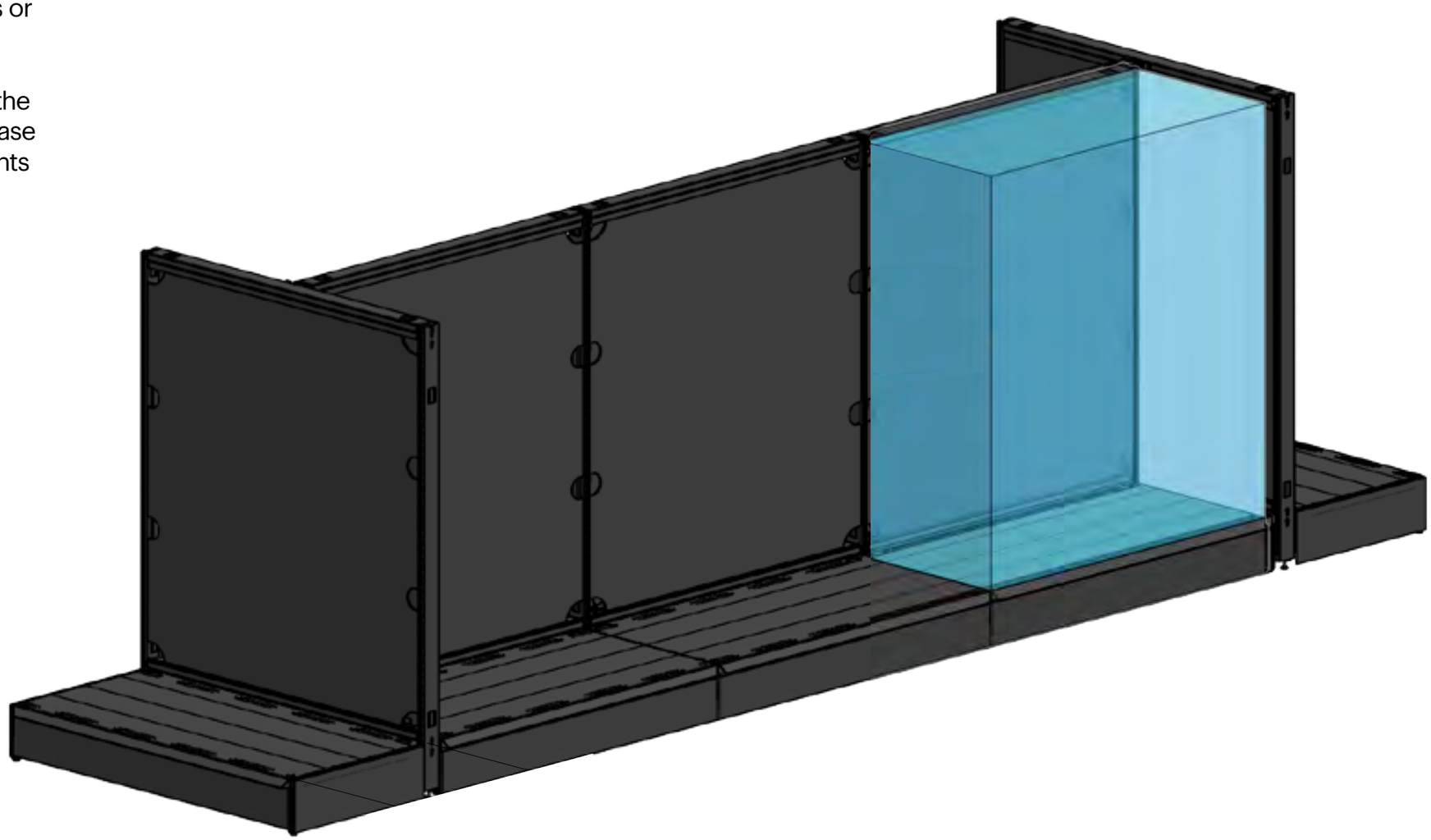

Last Updated August 12, 2026 8:20 AM | Best Buy partner and internal use only. Do not copy, publish, or distribute. The material in this document is confidential to Best Buy.

Power and Attachments

Power access is located in one of the lowbay inline base decks within 12’ of your display.

Vendor Requirements

- Route power cords (12’L minimum) through the mouse holes in the backer panels and into the base deck.
- Ensure your electronics are labeled, color-coded and accessible without tools for easy replacement.
- Ensure your product is securely attached to the fixture or to a display that’s attached to the fixture. This will prevent product from falling over or being taken.

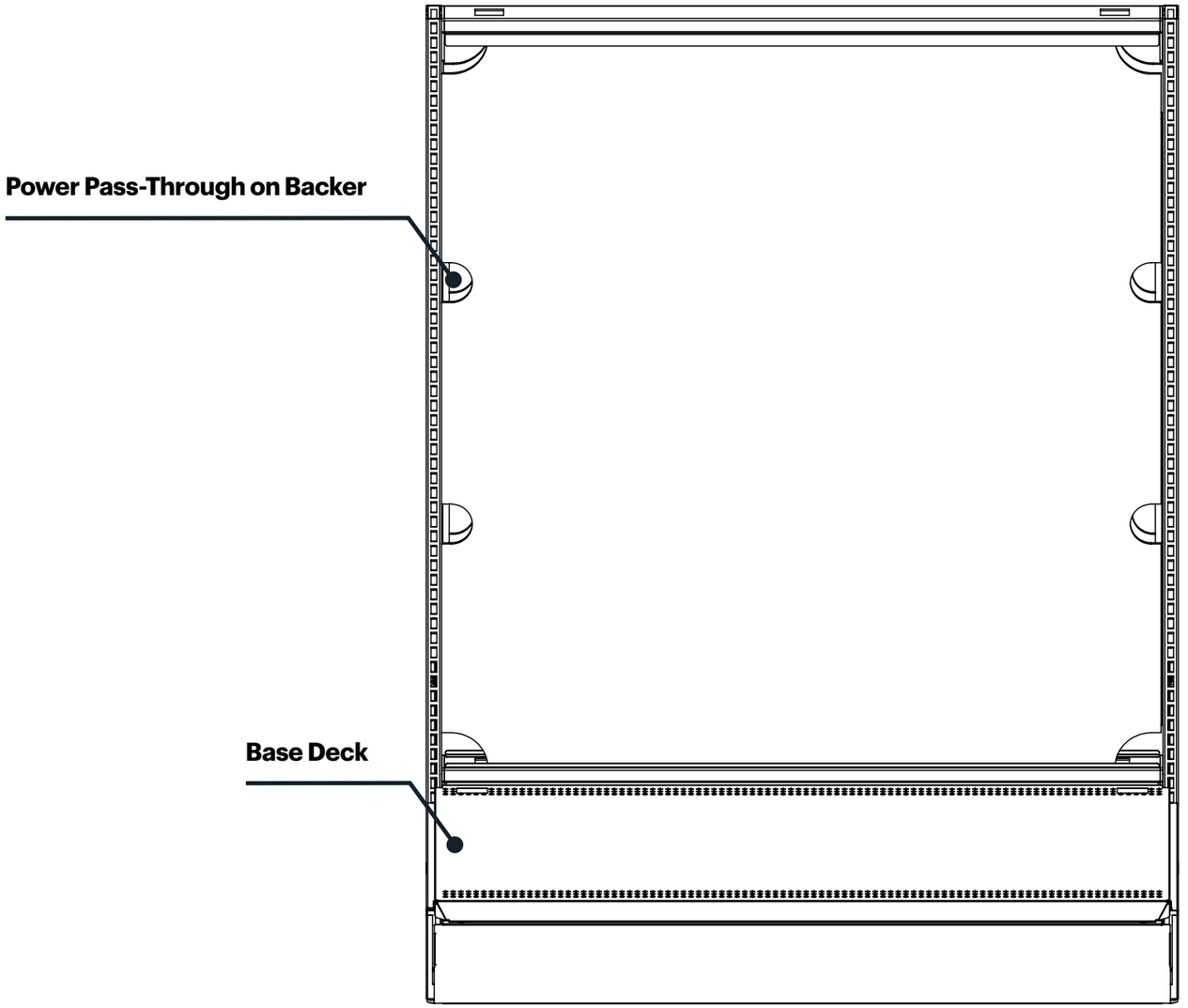

Last Updated August 12, 2026 8:20 AM | Best Buy partner and internal use only. Do not copy, publish, or distribute. The material in this document is confidential to Best Buy.

Merchandising

- Ensure product does not extend wider than fixture edges or higher than fixture height.
- Support all products with a proximally located peg label-sized Electronic Shelf Label (ESL).
- Design modular display components to ensure easy replacement when products change.
- Include your choice of Demo, Display or Dead Mock Display product(s).
  - **Demo:** An out-of-box product feature that allows for an interactive experience.
  - **Display:** A non-interactive product included to show materiality, form factor, colorways and sizing.
  - **Dead Mock Display:** A non-interactive 3D model of salable product intended to show form factor, colorways and sizing.

Note: *Printed representational stand-ins of products are not permitted.*

Find more details and dimensions in these guides on Partner Portal:

QR Code Guidelines

Graphics

- Ensure the product serves as the hero of the presentation; all signage should act in support.
- Include your logo in the uppermost 6” of your display.
  Note: *Preferred style is a white illuminated logo centered on a black horizontal header. If you choose to illuminate your logo, consider using Best Buy’s logo header and light panel (see following page for part numbers).*
- Ensure all graphics comply with requirements for copy, design, size, etc.
- Include, if desired, one printed QR code per every four linear feet of vendor presentation. See our QR Code Guidelines for details.

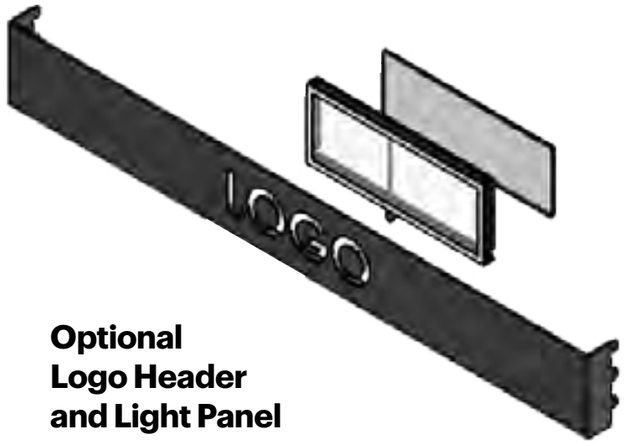

Optional Logo Header and Light Panel

Last Updated August 12, 2026 8:20 AM | Best Buy partner and internal use only. Do not copy, publish, or distribute. The material in this document is confidential to Best Buy.

Lighting

Select optional VPP lighting opportunities exist for **4’ or wider** Lowbay Gondola Takeover (Total) Activations.

Vendor Requirements

- Maintain a LUX reading of 2000 or lower for all lighting with the exception of the logo header as noted separately in Lighting guidelines.
- Lighting must not distract from or diminish the display product, which should remain the hero of the presentation
- Permitted lighting options include uplighting, shelf lighting, backlighting, soft ambient lighting along fixture edges, illuminated logos on headers, and light emitted from display products and monitors.
- Flashing, pulsating or undulating light, downlighting, in-case and lighting behind acrylic or glass *are not permitted*.

Vendor Recommendations

- Use lighting to enhance the brand and product identity.
- Keep light forms engaging.
- Use lighting to show product activation via interaction points.
- Ensure extra lighting can’t be confused for a product feature.

Find more details and dimensions in these guides on Partner Portal:

Technology Design Standards

Lighting

Integrated Technology

Integrated technology must align with the Technology Design Standards on Partner Portal. Best Buy’s Technology Design Lab must approve any working electrical components, including illuminated logos, media players, etc.

Buttons

- Interactive buttons are permitted as follows:
  - — Duco DTPB-X-32 (only approved button)
  - — Surrounded by a white light-up ring
  - — Shown with text that clearly defines the button action. Text must be:
    - — Black, size 14, Human BBY Medium
    - — Located below the button
    - — Printed on the substrate (no decals)

Last Updated August 12, 2026 8:20 AM | Best Buy partner and internal use only. Do not copy, publish, or distribute. The material in this document is confidential to Best Buy.

Fixture Parts

Refer to the part numbers below when ordering any necessary components:

Fixture Component	Best Buy Part Number
Header Example, 48”H x 6”H	1017768
Header Light Panel, 14”W x 6”H	1014837
Header Light Panel Housing, 14.69”W x 5.75”H	1014832

Last Updated August 12, 2026 8:20 AM | Best Buy partner and internal use only. Do not copy, publish, or distribute. The material in this document is confidential to Best Buy.

Lowbay Gondola VPP Activation

Overview

A vendor deploying a lowbay gondola VPP activation must outfit a 2’ or 4’ presentation including graphics and any fixture components needed to elevate their display. Vendor VPPs will activate on Best Buy owned fixtures.



Last Updated August 12, 2026 8:20 AM | Best Buy partner and internal use only. Do not copy, publish, or distribute. The material in this document is confidential to Best Buy.

Integrated Technology

Integrated technology must align with the Technology Design Standards on Partner Portal. Best Buy's Technology Design Lab must approve any working electrical components, including illuminated logos, media players, etc.

Lighting

- Downlighting, in-case lighting and lighting behind glass or acrylic is not permitted.
- Lit logos on headers and illumination emitted from display products and monitors are permitted. Additional lighting opportunities may exist for inline presentations 4' or wider. Refer to Lowbay Gondola Total Activation Guideline for details.

Buttons

- Interactive buttons are permitted as follows:
  - — Duco DTPB-X-32 (only approved button)
  - — Surrounded by a white light-up ring
  - — Shown with text that clearly defines the button action. Text must be:
    - — Black, size 14, Human BBY Medium
    - — Located below the button
    - — Printed on the substrate (no decals)

Find more details and dimensions in these guides on Partner Portal:

Technology Design Standards

Lighting

Power and Attachments

Power access is located in one of the lowbay inline base decks within 12' of your display.

Vendor Expectations

- Route power cords (12'L minimum) through the mouse holes in the backer panels and into the base deck.
- Ensure your electronics are labeled, color-coded and accessible without tools for easy replacement.
- Ensure your product is securely attached to the fixture or to a display that's attached to the fixture. This will prevent product from falling over or being taken.

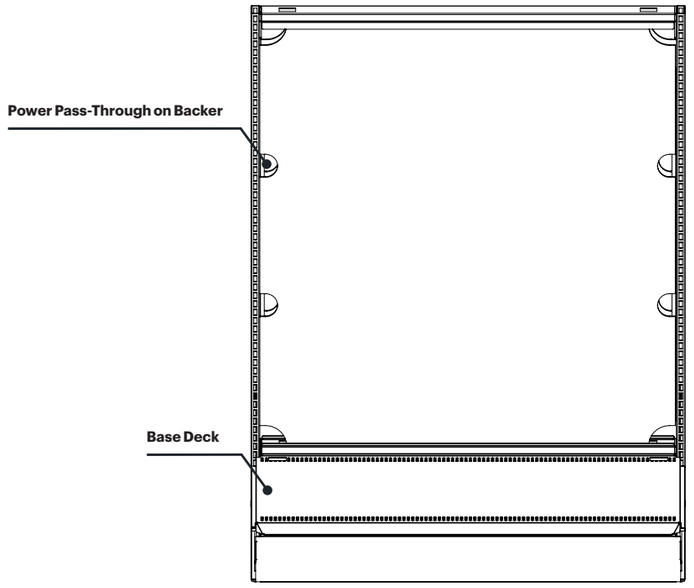

Last Updated August 12, 2026 8:20 AM | Best Buy partner and internal use only. Do not copy, publish, or distribute. The material in this document is confidential to Best Buy.

Merchandising

- Display method is available in 2’ or 4’ increments and must not extend wider than fixture edges or higher than fixture height. Presentations less than 2’ will not be considered for the VPP activation.
- Design modular display components to ensure easy replacement when products change.
- All powered displays must include a 4” base or riser system to ensure power compatibility. Non-powered displays are encouraged to include a 4” base or riser system to ensure presentation consistency throughout any given department.
- Displays are permitted to have a back panel component, however if you choose not to have a back panel, backer graphics must be provided.
- Support all products with a proximally located peg label-sized Electronic Shelf Label (ESL).
- Secure products to displays using approved attachment methods that allow customer interaction while ensuring ADA compliance.
- Include your choice of Demo, Display or Dead Mock Display product(s).
    - **Demo:** An out-of-box product feature that allows for an interactive experience.
    - **Display:** A non-interactive product included to show materiality, form factor, colorways and sizing.
    - **Dead Mock Display:** A non-interactive 3D model of salable product intended to show form factor, colorways and sizing.

Note: *Printed representational stand-ins of products are not permitted.*



Last Updated August 12, 2026 8:20 AM | Best Buy partner and internal use only. Do not copy, publish, or distribute. The material in this document is confidential to Best Buy.

Graphics Overview

- Provide required graphics for your chosen display type, complying with all copy, design, size, substrate, etc. requirements outlined in the related guide on Partner Portal (see below).
- Ensure the product serves as the hero of the presentation; all signage should act in support.
- Include your logo in the uppermost 6” of your display.
  Note: *Preferred style is a white illuminated logo centered on a black horizontal header. If you choose to illuminate your logo, consider using Best Buy’s logo header and light panel.*
- Ensure all graphics comply with requirements for copy, design, size, etc.
- Include, if desired, one printed QR code per four linear feet of vendor presentation. See our QR Code Guidelines for details.

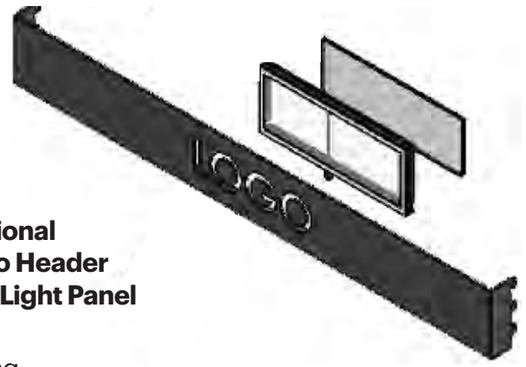

Optional Logo Header and Light Panel

Find more details and dimensions in these guides on Partner Portal:

Copy & Claims Guidelines

QR Code Guidelines

Info Graphics

Info graphics invite vendors to highlight product features. These graphics are populated with vendor-provided content and are designed and produced by the vendor to ensure VPP compatibility. Digital content may be used in place of these graphics.

Vendor Expectations

- Ensure all content follows Best Buy’s Copy & Claims Guidelines (below).

Best Practices

- Product specific info graphics must coordinate with products on display.
- Any imagery or education for products not on display may be called out via QR code. One printed QR code per four linear feet of vendor presentation is permitted. See our QR Code Guidelines for details.
- Educational callouts such as “works with” or “compatible with” are permitted.
- Promotional graphics are permitted to promote temporary offers or bundled messages however, they must be placed adjacent to the product in which the promotion applies.
  Note: *Promotional temp graphics must follow applicable temp graphic approval processes.*



Last Updated August 12, 2026 8:20 AM | Best Buy partner and internal use only. Do not copy, publish, or distribute. The material in this document is confidential to Best Buy.

Backer Graphic Options

Vendor Expectations

- Provide a backer graphic, adhering to the applicable template's exact dimensions (see examples at right).
- If no back panel is present, include your logo within the top 6" of the backer.
- If desired, one printed QR code may be included in the top right corner of the backer for educational purposes only.
- The QR code must be accompanied by a brief call to action, both of which must be sized according to Best Buy's template. QR codes directing to promotional information will not be permitted.

Best Practices

- Select a single image, texture or color to fill the entire backer. Brand color stories are permitted.
  Note: *Select an image carefully to ensure the subject of your photo is appropriately placed.*
- Prioritize the following for photo selection:
  Content: Lifestyle imagery of humans interacting with products.
  Crop: Humans and products largely centered, with products clearly visible.
- Choose from these alternate options only if lifestyle imagery of humans/products isn't available or allowed:
  — Lifestyle imagery of products without humans.
  — Hero product imagery on a neutral color field.

4' Inline Backer Graphic (Magnetic)

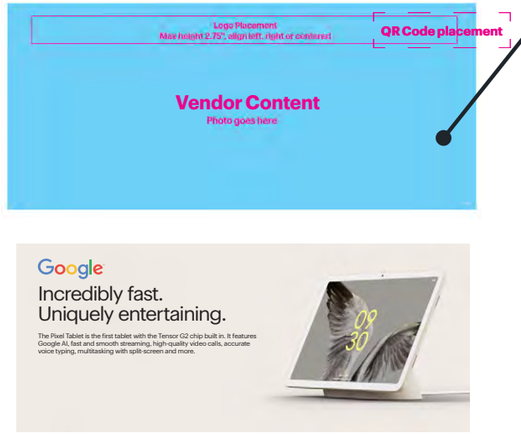

Size: 47.938"W x 20.313"H
Substrate: Magnetic Receptive (10-12.5mil, 94–97 bright)
Notes:
— Include a tagline, if desired.
— Message must be relevant to all products on display.
— Ensure copy contrasts with image for legibility.

4' Inline Backer Graphic (Styrene)

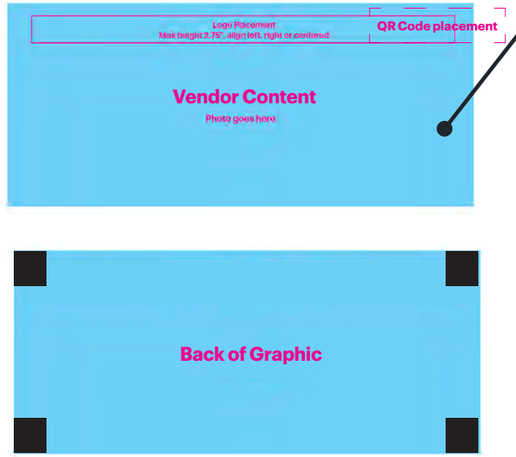

Size: 47.938"W x 20.313"H
Substrate: Styrene (.040 Styrene, White) with Clips (2 Left Hook Part #17-04*0017243, 2 Right Hook Part #17-04-0017242)
Notes:
— Clip attachment points should be included on the back of the graphic .5" from both the top and bottom corners, flush to the sides of the graphic.

2' Inline Backer Graphic

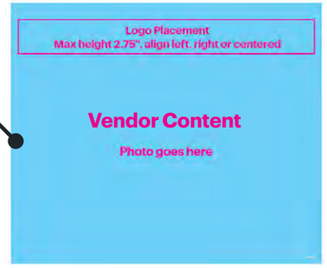

Size: 23.95"W x 20.313"H
Substrate: Styrene (.040 Styrene, White) with 1" Duraco Remo1 4.4mil Film Tape
Notes:
— No foam tape will be considered.
— Film tape should be placed on the top back of the graphic and run the full width of the graphic (23.95").

Last Updated August 12, 2026 8:20 AM | Best Buy partner and internal use only. Do not copy, publish, or distribute. The material in this document is confidential to Best Buy.

Shelf Types and Attachment

Many shelf sizes/types exist on lowbay gondolas:

- 12” Skinny Universal
- 20” Universal
- 12” Skinny Standard
- 14” Standard
- 18” Standard
- 22” Standard

Different shelf types have different attachment methods, as shown at right.

You may encounter one or more of these shelves in your display. Thread sizes for studs and wing nuts may also vary based on display size and weight. See our Shelf Dimensions & Perf Pattern Guidelines for details or partner your Best Buy contact for specifics.

Universal Shelf Depths

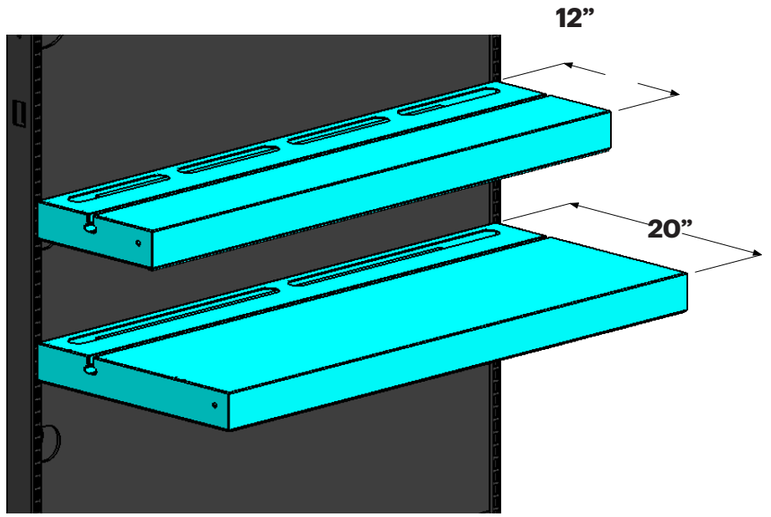

Standard Shelf Depths

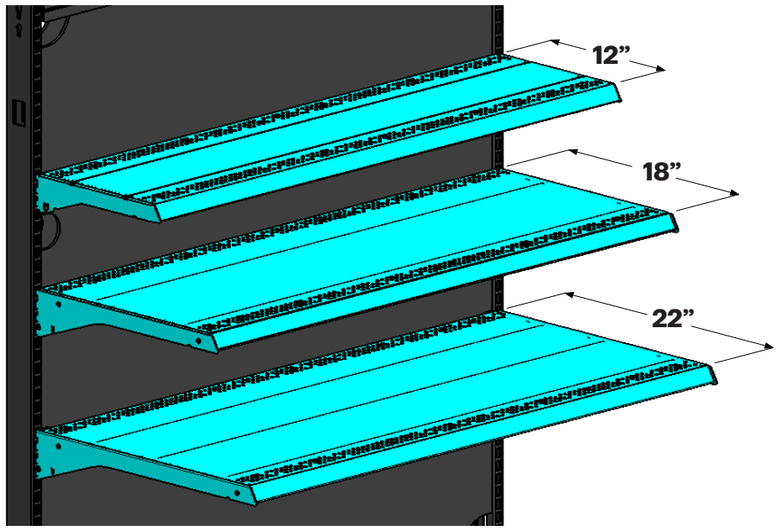

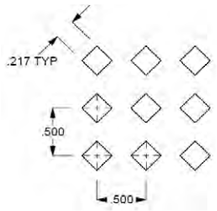

Diamond Perforation Pattern

Find more details and dimensions in these guides on Partner Portal:

Shelf Dimensions & Perf Patterns

Last Updated August 12, 2026 8:20 AM | Best Buy partner and internal use only. Do not copy, publish, or distribute. The material in this document is confidential to Best Buy.

L-Shaped Fixture

Fixture Overview

Our versatile L-shaped fixture offers a reliable and secure solution intended to display products on Standard Lowbay, Skinny Lowbay and Perimeter Half-Rack Gondolas.

*(**Note:** Select departments utilize alternate fixtures; see the Consolidated Vendor Guidelines on Partner Portal for details.)*

The fixture's modular design allows for seamless customization, accommodating depths of 12, 18 and 22 inches. Additionally, it supports displays in recommended widths of 11.875, 23.875 and 47.875 inches (23.875-inch examples shown at right) and a variety of fixture heights, providing maximum flexibility to suit various needs.

While black is the recommended fixture color, vendors may use an alternate color as long as it does not distract from the product.



23.875"W x 12"D

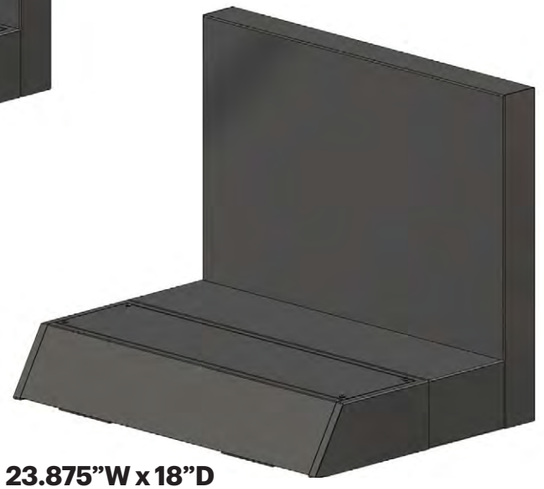

23.875"W x 18"D

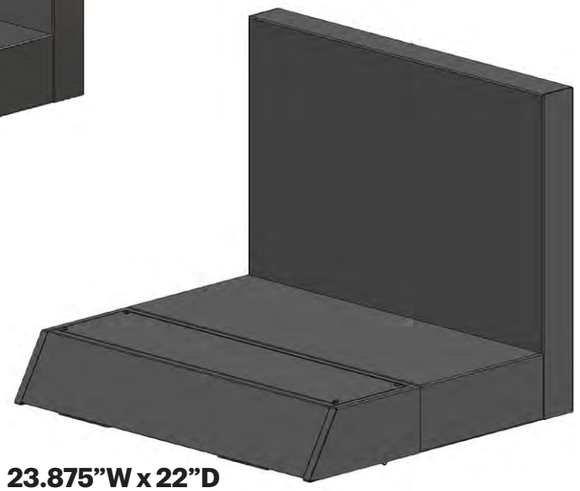

23.875"W x 22"D

Last Updated August 12, 2026 8:20 AM | Best Buy partner and internal use only. Do not copy, publish, or distribute. The material in this document is confidential to Best Buy.

Fixture Overview

Y = Unknown Variable

The back supporting component measurement should correspond to the planogram height.

Fixture Base

Manage electrical boundaries within a confined space that is fully and easily accessible via a hinged front door.

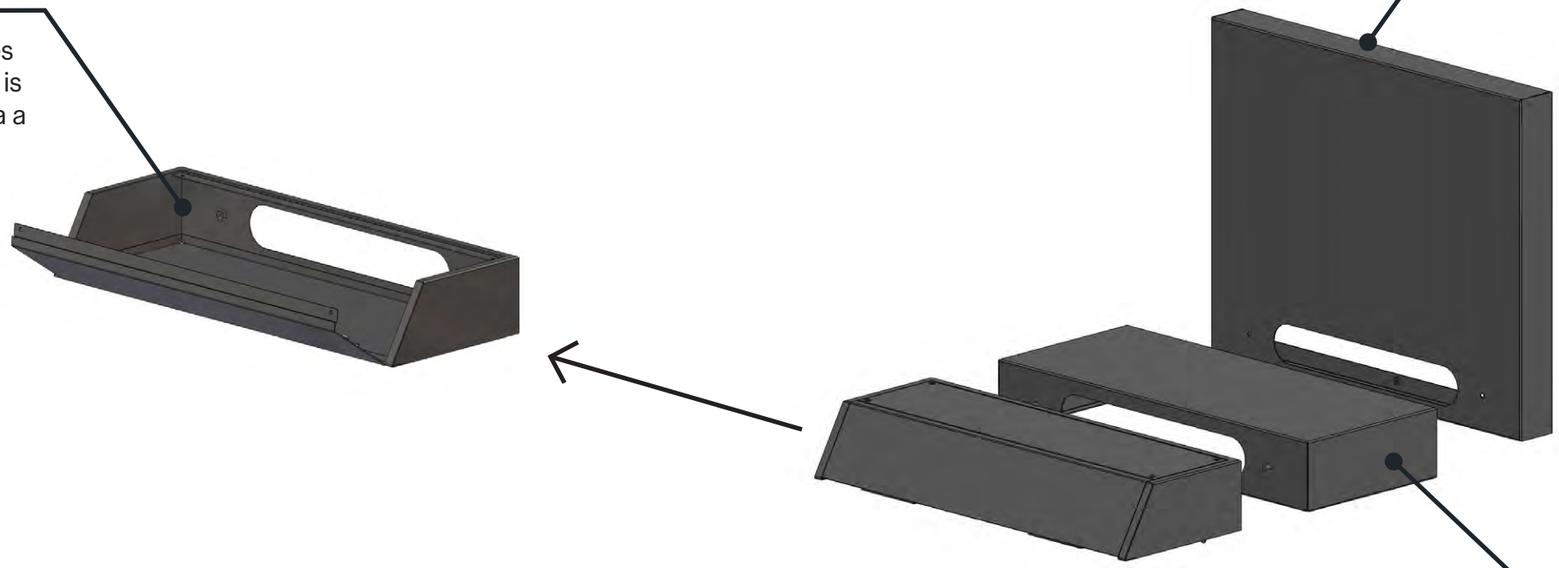

Fixture Component

Achieve your desired fixture depth by combining adjoining components for each fixture configuration.

Last Updated August 12, 2026 8:20 AM | Best Buy partner and internal use only. Do not copy, publish, or distribute. The material in this document is confidential to Best Buy.

Fixture Dimensions — 12”D

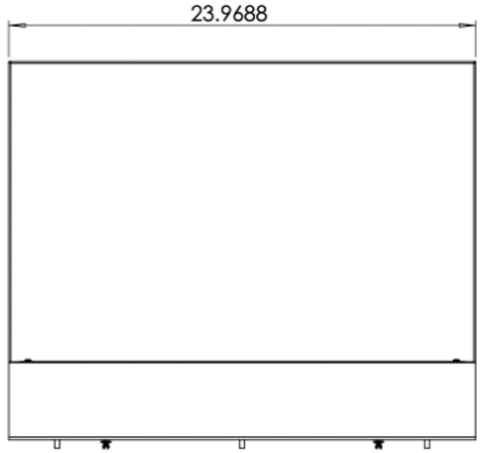

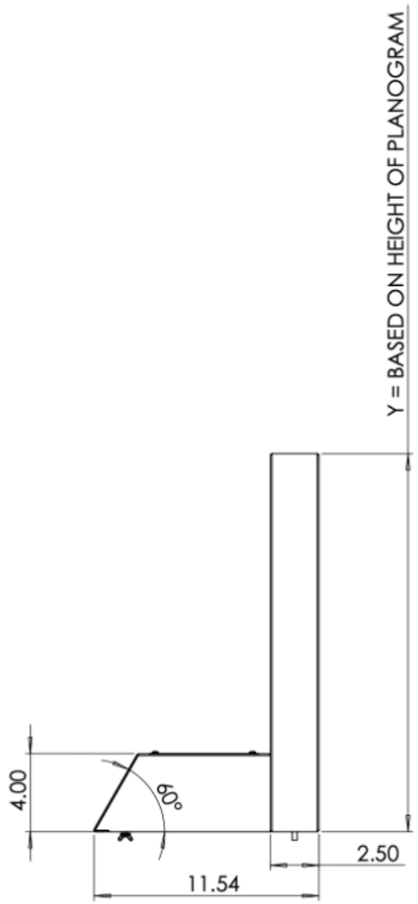

23.875”W x 12”D

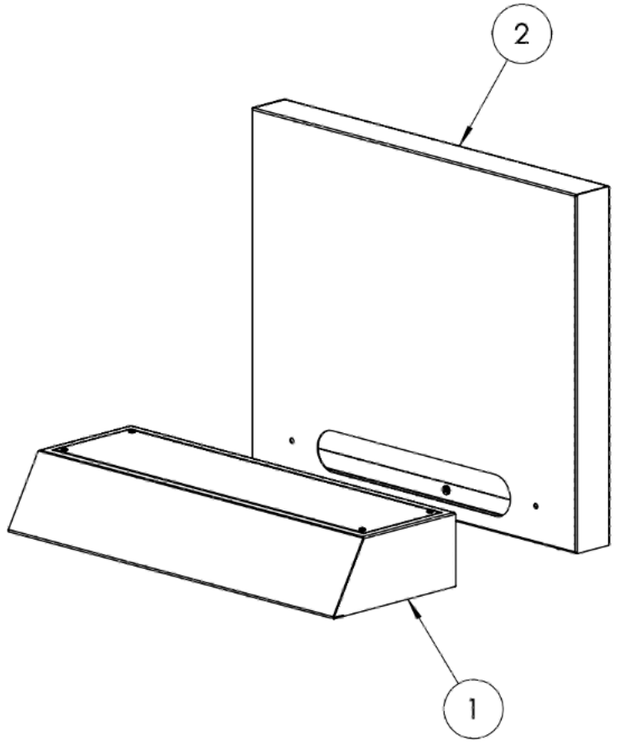

Last Updated August 12, 2026 8:20 AM | Best Buy partner and internal use only. Do not copy, publish, or distribute. The material in this document is confidential to Best Buy.

Fixture Dimensions — 18”D

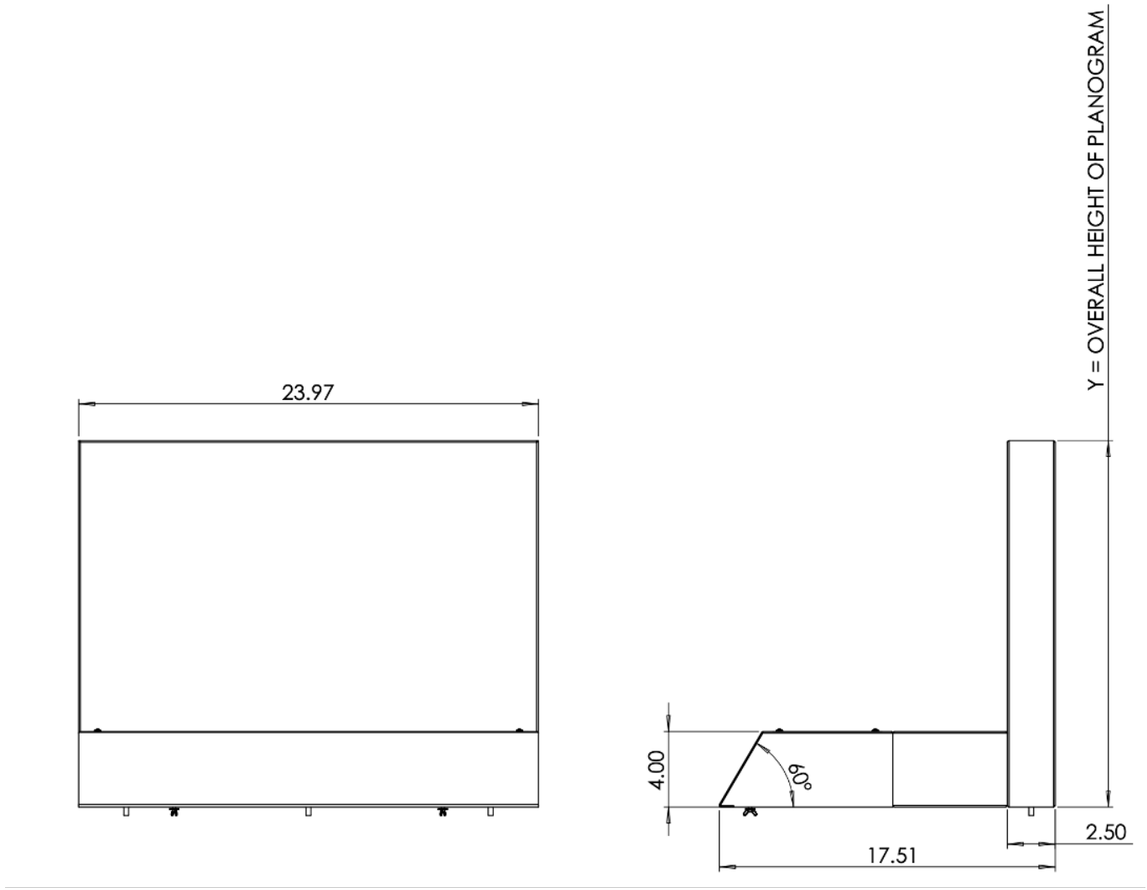

23.875”W x 18”D

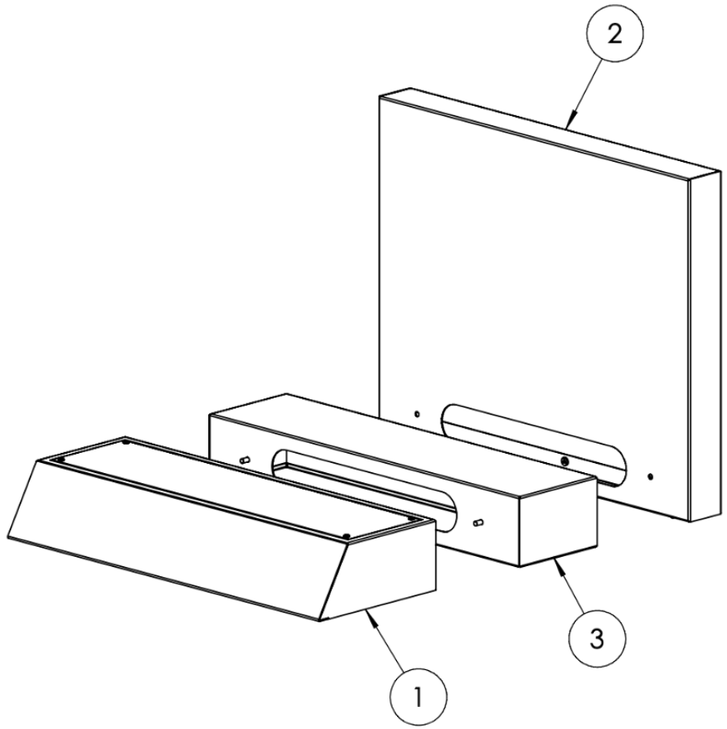

Last Updated August 12, 2026 8:20 AM | Best Buy partner and internal use only. Do not copy, publish, or distribute. The material in this document is confidential to Best Buy.

Fixture Dimensions — 22”D

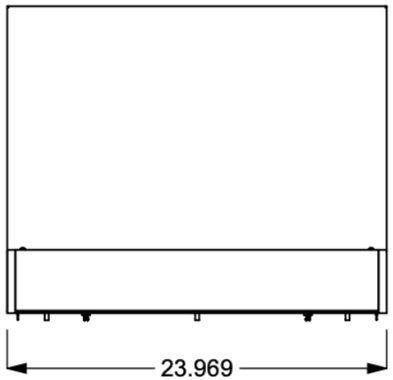

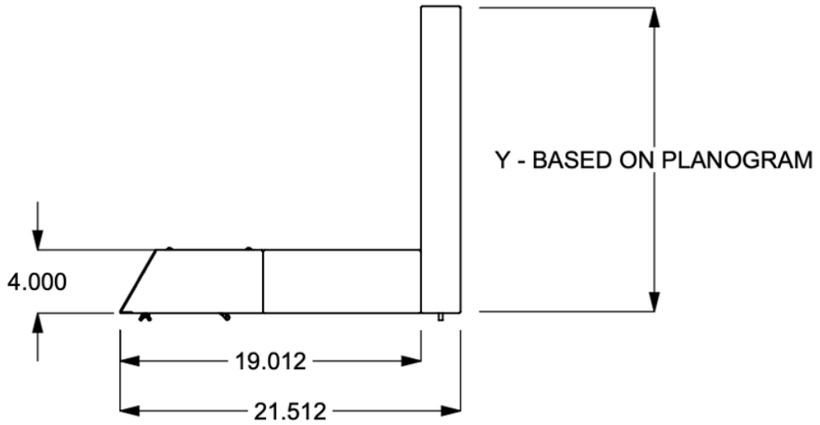

23.875”W x 22”D

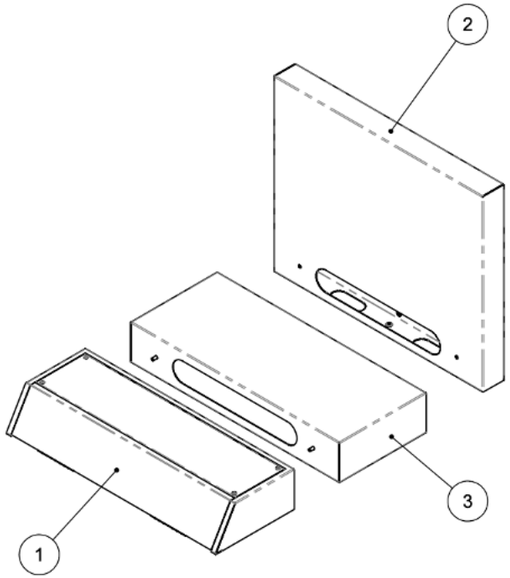

Last Updated August 12, 2026 8:20 AM | Best Buy partner and internal use only. Do not copy, publish, or distribute. The material in this document is confidential to Best Buy.

Power and Attachments

Follow these expectations when attaching the L-shaped fixture to the lowbay gondola and endcaps:

Vendor Requirements

- Route power off the rear of the shelf, through the backer and into the base deck, where power access is provided.
  Note: *If you prefer to provide your own power strip, it must be UL listed and approved by Best Buy's Technology Design Lab. Contact the Lab for help.*
- Use power cords that are at least 12' long to adequately reach the power strip.
- Label and color-code electronics. Ensure they can be accessed without tools for easy replacement.
- Fully assemble your L-shaped fixture before physically tethering it to the shelf.
  Preferred method: *Attach display to shelf's perforated pattern using threaded studs with washers and wingnuts.*
- See drawings for detailed information on each gondola shelf's dimensions and unique perforated pattern.
  Ask your Best Buy contact for patterns.

Standard Gondola Shelves

BEST BUY SHELF DETAILS			MERCHANDISING AREA	
SHELF COMMON NAME	EPDM NUMBERS	FINISH	W (INCHES)	D (INCHES)
10.5" X 48"	1016891	BLACK	47.7	10.4
10.5" X 24"	1017727	BLACK	23.7	10.4
12" X 48"	1014797	BLACK	47.7	11.9
	1016889	WHITE		
12" X 24"	1017788	BLACK	23.7	11.9
	1022211	WHITE		
14" X 48"	1012248	BLACK	47.7	13.7
	1021561	WHITE		
	1008678	SILVER		
14" X 24"	1012247	BLACK	23.7	13.7
	1008677	SILVER		
18" X 48"	1012249	BLACK	47.7	17.7
	1021562	WHITE		
	1008683	SILVER		
18" X 24"	1012250	BLACK	23.7	17.7
	1008687	SILVER		
22" X 48"	1012251	BLACK	47.7	21.7
	1008693	SILVER		
22" X 24"	1012252	BLACK	23.7	21.7
	1008695	SILVER		

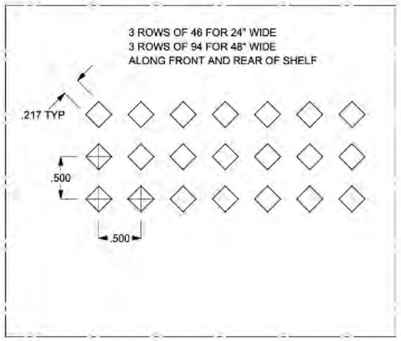

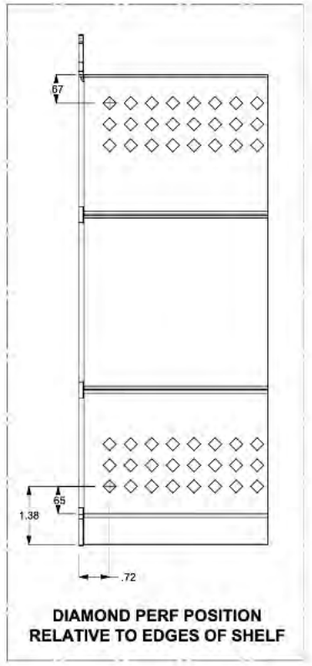

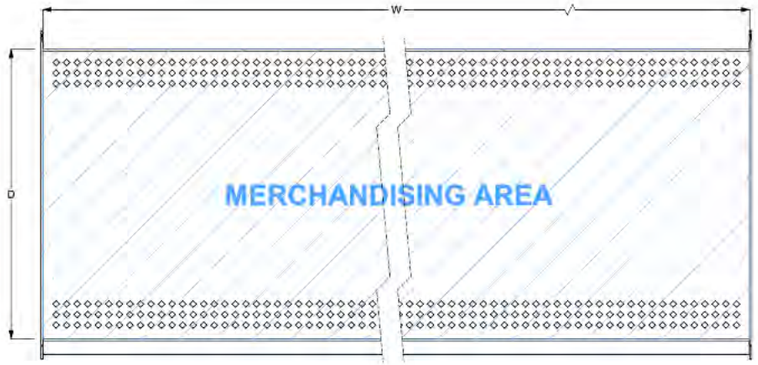

Last Updated August 12, 2026 8:20 AM | Best Buy partner and internal use only. Do not copy, publish, or distribute. The material in this document is confidential to Best Buy.

Power and Attachments

Follow these requirements in attaching the VPP display:

Vendor Requirements

- Remove batteries from the product before displaying.
- Connect all power to a power strip that is directly connected to a power receptacle. Power strips cannot be daisy-chained.
- Secure demo product using approved tethers, recoilers, mechanical fasteners or security devices.
- Purchase electronic security devices from the approved vendors noted in the Technology Design Standards.
- Neatly organize or hide additional power cords, plugs, etc. to avoid clutter and cord drape.

You will need details and dimensions in these guides on Partner Portal:

Technology Design Standards

Last Updated August 12, 2026 8:20 AM | Best Buy partner and internal use only. Do not copy, publish, or distribute. The material in this document is confidential to Best Buy.

Lighting and Integrated Technology

Best Buy's Technology Design Lab must approve any working electrical components, including illuminated logos, media players, etc.

Vendor Requirements

- **Inline fixtures:** Lit logos on headers and light emitted by display products and monitors *are permitted*. Additional lighting opportunities may exist for inline presentations 4' or wider. Refer to Lowbay Gondola Total Activation Guideline for details.
- **Endcap fixtures:** Uplighting, fixture edge soft ambient lighting, lit logos on headers, and light emitted by display products and monitors *are permitted*. All other forms of lighting *are not permitted*.
- **Buttons:** Interactive buttons are permitted. They must be:
  - — Duco DTPB-X-32 (the only approved button)
  - — Surrounded by a white light-up ring
  - — Shown with text that clearly defines the button action. Text must be:
    - — Black, size 14, Human BBY Medium
    - — Located below the button
    - — Printed on the substrate (no decals)

You will need details and dimensions in these guides on Partner Portal:

Technology Design Standards

Lowbay Gondola Total Activation

Last Updated August 12, 2026 8:20 AM | Best Buy partner and internal use only. Do not copy, publish, or distribute. The material in this document is confidential to Best Buy.

Graphics

Vendor Requirements

- Include your logo in the uppermost 6” of your display.
  Note: *Preferred style is a white illuminated logo centered on a black horizontal header.*
- Ensure graphics comply with requirements for copy, design, etc.
  Note: *Recommended substrate is 20mil Magnetic Vinyl, White*
- Include, if desired, one QR code per four linear feet of vendor display. Ensure your code links to BestBuy.com or a closed microsite created only for Best Buy.

Best Practices

- Ensure the product serves as the hero of the presentation; all signage and collateral should act in support.
- Feature each signage element at its most impactful moment of the customer’s journey. (i.e. Copy-heavy signage should fall after a customer’s engagement with the product.)
- Consider using lifestyle imagery on your graphic backer, focusing on a simple subject that is not highly stylized.



You will need details and dimensions in these guides on Partner Portal:

Copy & Claims Guidelines

QR Code Guidelines

Last Updated August 12, 2026 8:20 AM | Best Buy partner and internal use only. Do not copy, publish, or distribute. The material in this document is confidential to Best Buy.

Merchandising

Vendor Requirements

- Ensure product does not extend wider than fixture edges or higher than fixture height.
- Support all display products with a proximally located peg label-sized Electronic Shelf Label (ESL) attached to the shelf rail.
  Note: *If desired, a fact tag-sized ESL may be used on the L-shaped fixture base, but this will reduce the available space for graphic activation.*
- Use permitted forms of lighting only.
- Design your display components with modularity in mind to ensure easy replacement when products change.
- Include your choice of Demo, Display or Dead Mock Display product(s).
  - **Demo:** An out-of-box product feature that allows for an interactive experience.
  - **Display:** A non-interactive product included to showcase materiality, form factor, color-way and sizing.
  - **Dead Mock Display:** A non-interactive 3D model of salable product intended to showcase form factor, colorways and sizing.

Note: *Printed representational stand-ins of products are not permitted.*

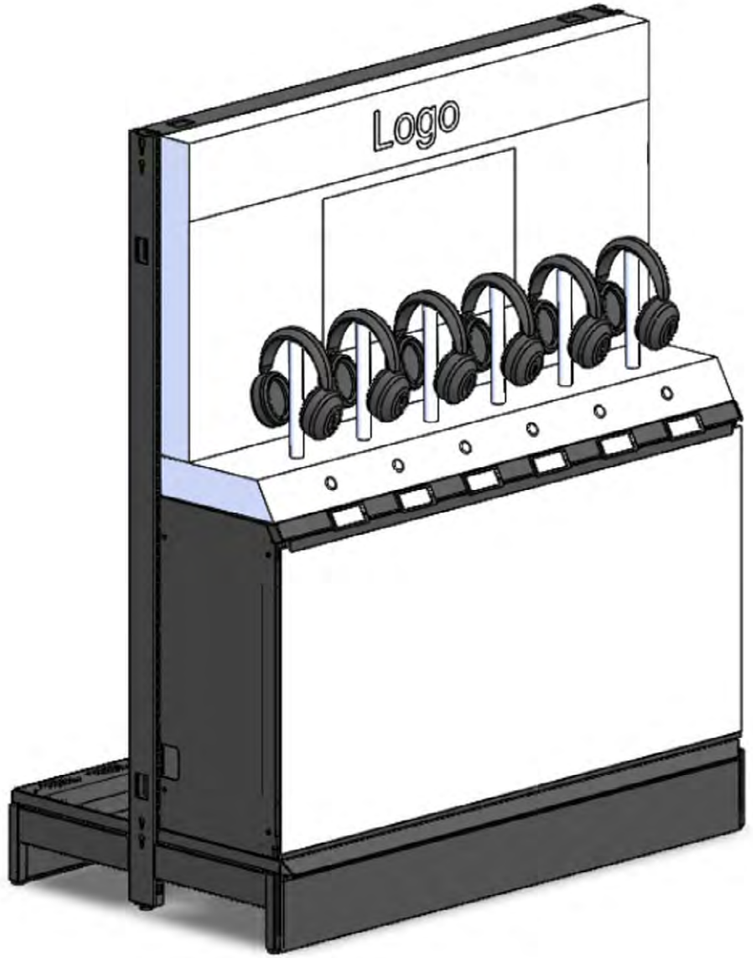

You will need details and dimensions in this guide on Partner Portal:

ESL Pricing

Last Updated August 12, 2026 8:20 AM | Best Buy partner and internal use only. Do not copy, publish, or distribute. The material in this document is confidential to Best Buy.

Fixture Parts

Refer to the part numbers below when ordering any necessary components.
Please partner with your Best Buy contact for the preferred fixture manufacturer. You may use an alternate manufacturer if you desired.

Fixture Component	Best Buy Part Number
Assembly, 12” Overall Base — Metal Product L Display, 24”W	1024838
Assembly, Back — Metal Product L Display, 24”W	1024827
Assembly, Spacer Large — Metal Product Display, 24” Wide	1024960
Assembly, Spacer Small — Metal Product L Display, 24”W	1024824

Last Updated August 12, 2026 8:20 AM | Best Buy partner and internal use only. Do not copy, publish, or distribute. The material in this document is confidential to Best Buy.

Major Appliance POP Graphics

Refrigerators

Vendor Expectations

- Include up to one external POP graphic on the product front to highlight product features and differentiators.
- Include up to three POP graphics on the product interior, ensuring graphics are not visible until the product is opened. See following page for details and guardrails.
- Follow Best Buy's Copy & Claims Guidelines on Partner Portal.
- Display overlay clings, if desired, on any screens and/or buttons to simulate a "powered" experience.

Note: *Mock food and freestanding printed food is not permitted. Food imagery on POP graphics is permitted.*

External POP Graphic

Size: 8.5"W x 11"H or smaller
Placement: Upper right side of appliance front
Note: *Mock food and freestanding printed food is not permitted. Food imagery on POP graphics is permitted.*

Overlay Cling

Note: *Clings may cover but not overhang screens or buttons.*



Find more details and dimensions in this guide on Partner Portal:

Copy & Claims Guidelines

Last Updated August 12, 2026 8:20 AM | Best Buy partner and internal use only. Do not copy, publish, or distribute. The material in this document is confidential to Best Buy.

Interior POP Graphics

Vendor Expectations

- POP graphics may be included on the product interior and must not be visible until the product is opened.
- A maximum of three interior POP pieces is permitted per display product.
- Graphics must not detract from product integrity and may cover no more than 20% of the total interior surface area.
- All graphics must comply with Copy & Claims guidelines outlined in the Partner Portal.

Best Practice

- POP graphics should call out key product benefits and support clear, concise storytelling.
- Limit marketing puffery and advertising to ensure product information remains clear, concise, and product-centric.
- Consolidate content into a single graphic whenever possible to reduce the total number of interior graphics.



Find more details and dimensions in this guide on Partner Portal:

Copy & Claims Guidelines

Last Updated August 12, 2026 8:20 AM | Best Buy partner and internal use only. Do not copy, publish, or distribute. The material in this document is confidential to Best Buy.

Washers, Dryers & Ovens

Vendor Expectations

- Include up to two total external POP graphics on a single product VPP—one on the product top and/or one on the product front—to highlight product features and differentiators.
- Include POP graphics as desired on the product interior, ensuring graphics are not visible until the product is opened.
- Follow Best Buy's Copy & Claims Guidelines on Partner Portal.
- Display overlay clings, if desired, on any screens and/or buttons to simulate a "powered" experience.

Note: *Mock food and freestanding printed food is not permitted. Food imagery on POP graphics is permitted.*

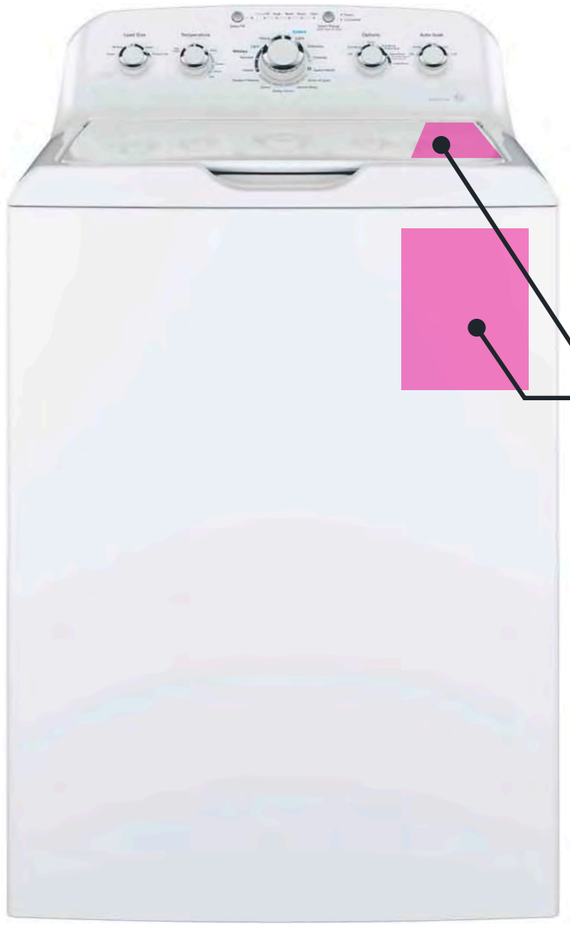

Overlay Cling

Note: *Clings may cover but not overhang screens or buttons.*

External POP Graphic

Size: 8.5"W x 11"H or smaller
Placement: Lower right side of appliance top and/or upper right side of appliance front
Note: *Mock food and freestanding printed food is not permitted. Food imagery on POP graphics is permitted.*

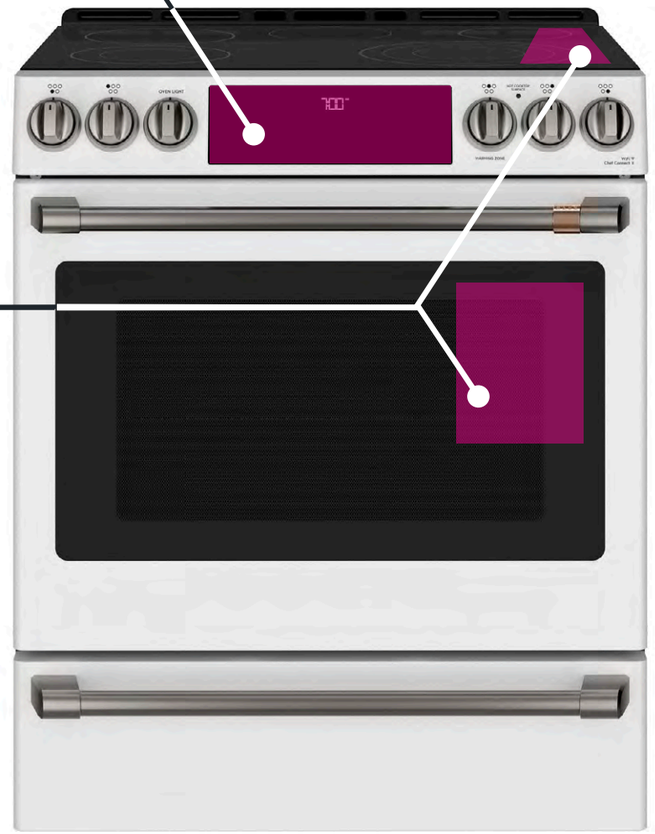

Find more details and dimensions in this guide on Partner Portal:

Copy & Claims Guidelines

Last Updated August 12, 2026 8:20 AM | Best Buy partner and internal use only. Do not copy, publish, or distribute. The material in this document is confidential to Best Buy.

Mobile Accessories

Overview

Mobile accessory presentations should be designed to provide navigational clarity to customers, enhance customer shopping experiences and provide educational touchpoints.

Vendors may also amplify their brand by including custom graphic packages and offering customers the ability to interact with their products.

Vendor VPPs will activate on Best Buy-owned fixtures with vendors providing any additional fixture components to elevate their presentation.

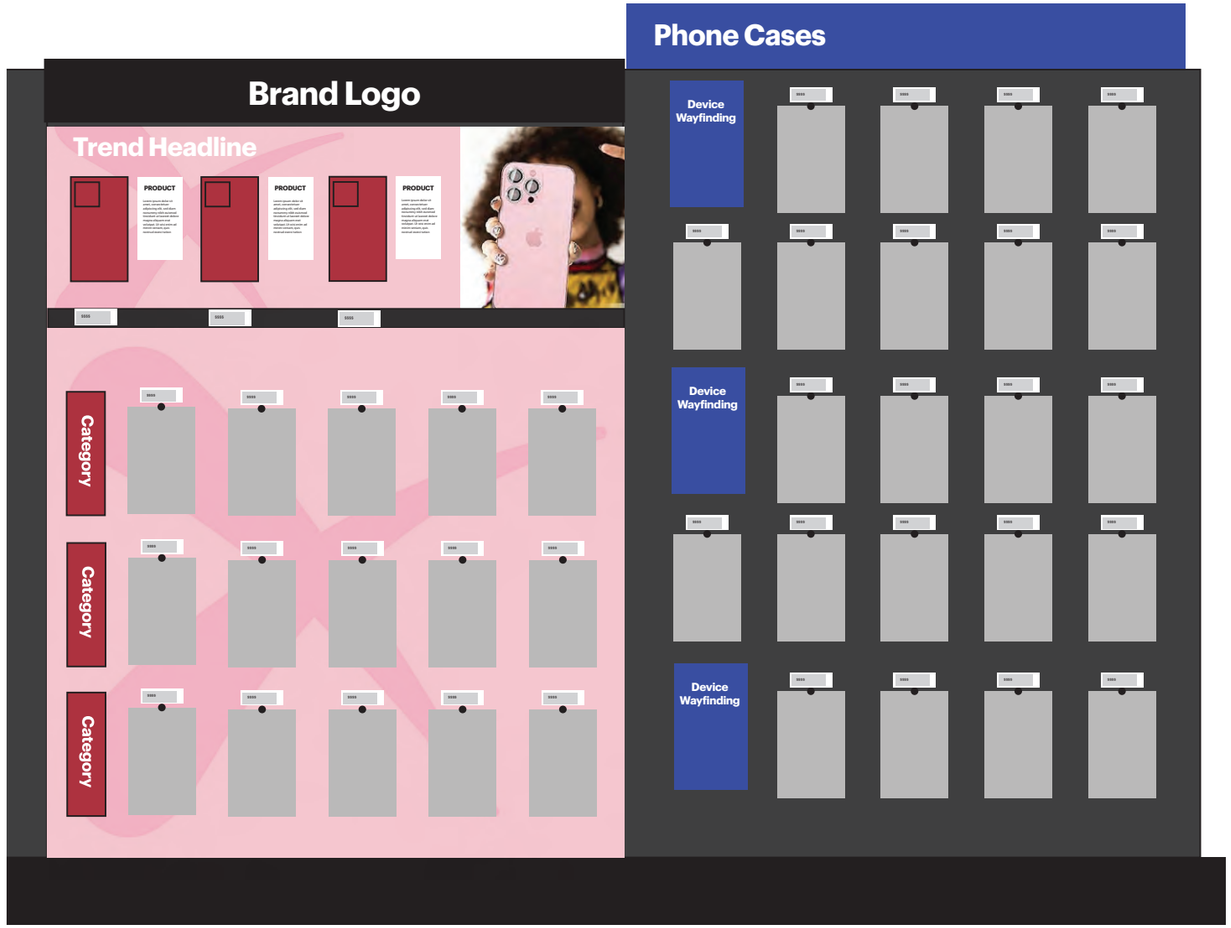

Last Updated August 12, 2026 8:20 AM | Best Buy partner and internal use only. Do not copy, publish, or distribute. The material in this document is confidential to Best Buy.

Merchandising

Vendor Requirements

- Design your display to be 4’W, ensuring it remains within the fixture width and height.
  Note: *Two-foot display opportunities may be available. Please partner with your Best Buy contact for more information.*
- Use modular display components for easy replacement when products change.
- Support all products with a proximally located peg label ESL.
- Include your choice of Demo, Display or Dead Mock Display product(s). Printed representations of products are not allowed.
  - **Demo:** An out-of-box product feature that allows for an interactive experience.
  - **Display:** A non-interactive product included to show materiality, form factor, colorways and sizing.
  - **Dead Mock Display:** A non-interactive 3D model of salable product intended to show form factor, colorways and sizing.

Note: *If displays/demos/dead mocks are activated on a backer or header fixture, they must not protrude more than 1” from the backer/header.*

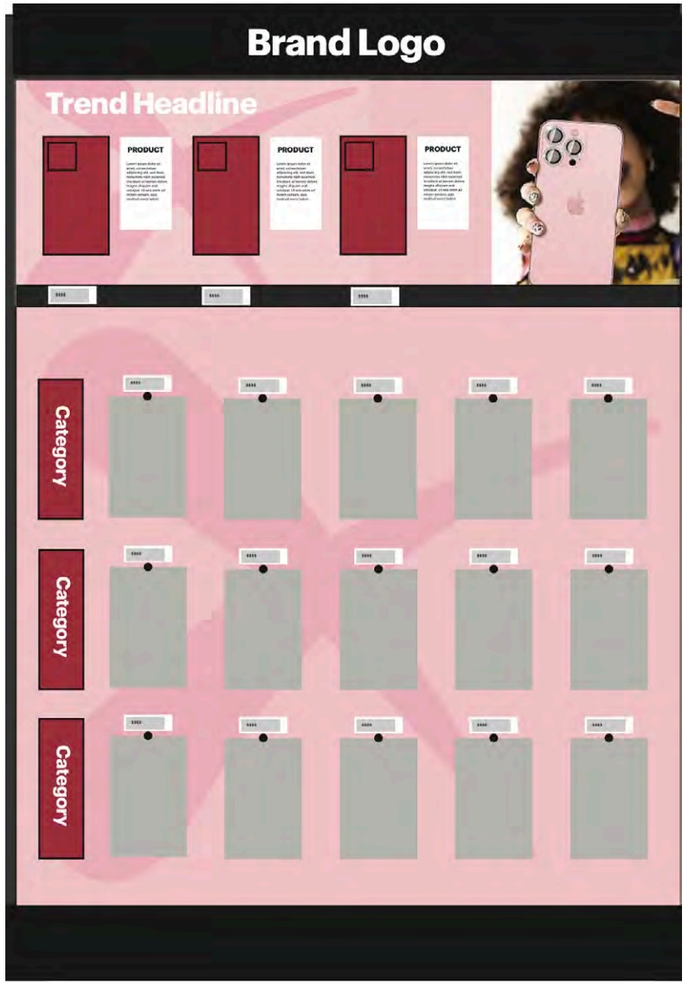

Last Updated August 12, 2026 8:20 AM | Best Buy partner and internal use only. Do not copy, publish, or distribute. The material in this document is confidential to Best Buy.

Graphics Overview

Vendor Requirements

- Provide required graphics for your chosen display type, complying with all copy, design, size, substrate, etc. requirements outlined in the related guide on Partner Portal (see below).
- Ensure that the physical product is the hero of the display with graphics serving as a supporting storytelling element that enhances the product experience rather than competing with it.
- Include your logo in the uppermost 6” of your display.
  Note: *Preferred style is a white logo centered on a black horizontal header.*
- Include, if desired, one printed QR code per four linear feet of vendor presentation. See our QR Code Guidelines for details.
- Include, if desired, graphics that promote temporary offers or bundled messages. These graphics must be placed adjacent to the product in which the promotion applies.
  Note: *Promotional temp graphics must follow applicable temp graphic approval processes. It is highly recommended to incorporate placement in initial presentation design to plan for future promotions.*

Find more details and dimensions in these guides on Partner Portal:

Copy & Claims Guidelines

QR Code Guidelines

Vendor-Provided Product Wayfinding Graphics

Product wayfinding graphics help customers understand options in each category or subcategory. These graphics are populated with vendor-provided content and are designed and produced by the vendor to ensure VPP compatibility.

Vendor Requirements

- Keep vendor-provided wayfinding graphics within the confines of your display.
  Note: *Best Buy retains ownership of any secondary inline header wayfinding graphics to maintain consistency across the store.*
- Any fixture components needed to deploy wayfinding graphics must be designed and produced as a VPP.
- The first wayfinding graphic must appear in the leftmost position of the presentation. If multiple touchpoints are needed, continue placement horizontally across the presentation before moving vertically.
  Note: *No more than one wayfinding graphic per subcategory is permitted per 4 linear feet.*

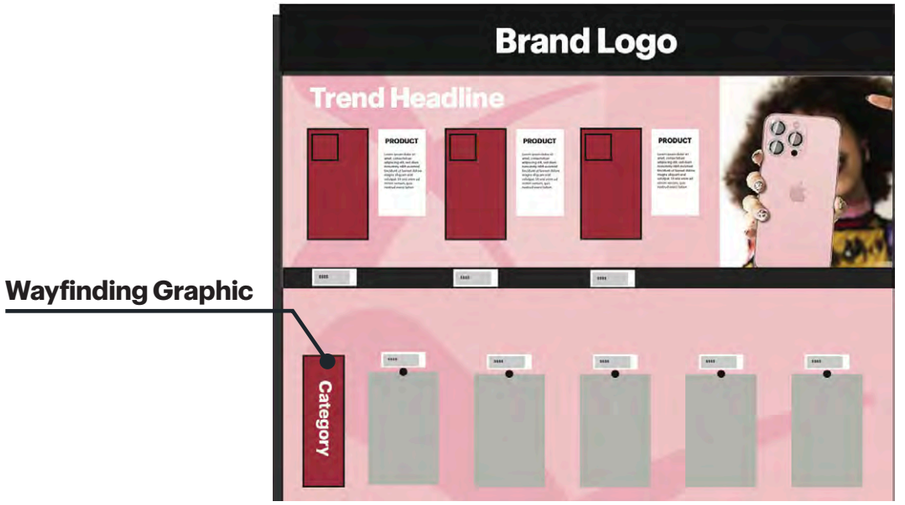

Last Updated August 12, 2026 8:20 AM | Best Buy partner and internal use only. Do not copy, publish, or distribute. The material in this document is confidential to Best Buy.

Infographics

Infographics invite vendors to highlight product features and provide customer education. These graphics are populated with vendor-provided content and are designed and produced by the vendor to ensure VPP compatibility. Digital content may be used in place of these graphics.

Vendor Requirements

- Coordinate all product-specific infographics with the products on display.
- Include one QR code, if desired, to provide imagery or education for products not on display. One printed QR code per four linear feet of vendor presentation is permitted. See our QR Code Guidelines for details.

  Note: *Educational callouts like "works with" or "compatible with" are allowed.*

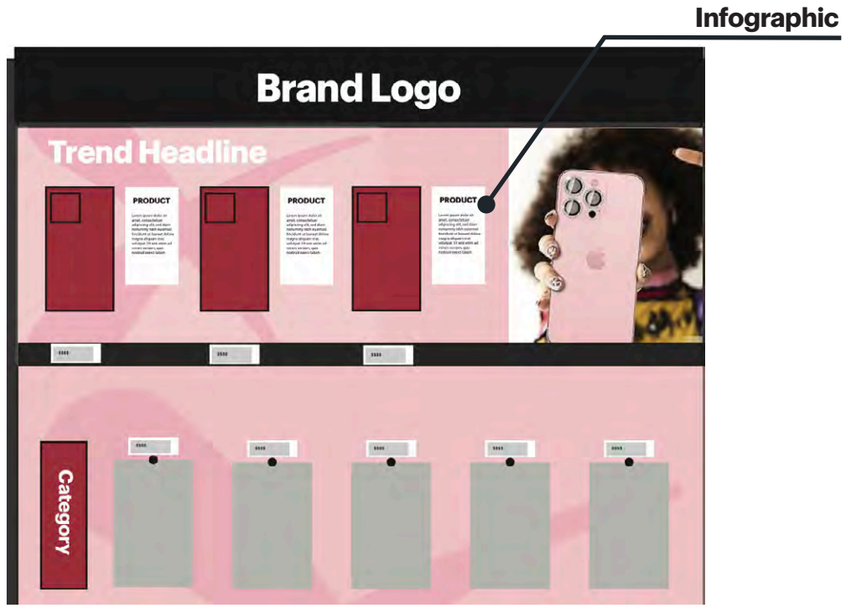

Base Deck Graphics/Liners

Base deck graphics help differentiate presentations by creating a branded experience from top to bottom. These graphics are designed and produced by vendors to complement their brand story.

Vendor Requirements

- Ensure your base deck graphics/liners do not contain copy, branding or logos. Branded color stories are permitted.
- Limit graphics to only a flat graphic/liner covering the top of the base deck. Graphics must fill the width of the fixture but may vary in depth, permitted they do not extend beyond the measurements shown below:
  - —**Standard Basedeck Dimensions:** 47.7"W x 23.7" D
  - —**Skinny Basedeck Dimensions:** 47.7"W x 13.7" D
- Use only magnetic substrates for enhanced durability and safety compliance.

  Recommended substrate: *20ml Magnetic Vinyl, White*

  Note: *Base deck graphics/liners often experience enhanced wear and tear within our retail environments. For this reason, ensure you have thorough repair and maintenance practices in place to maintain proper visual standards.*

Last Updated August 12, 2026 8:20 AM | Best Buy partner and internal use only. Do not copy, publish, or distribute. The material in this document is confidential to Best Buy.

Perimeter Computer Monitors

Overview

The perimeter computer monitor display invites vendors to tell their brand story on the perimeter wall of the store. This allows for vertical product stacking and the inclusion of graphics for a compelling narrative.

As Best Buy looks to introduce vendor displays of computer monitors into the center of store in the future, this document will be amended to include guidelines for additional fixture types.

**Drawings and models of all parts available upon request.*



Last Updated August 12, 2026 8:20 AM | Best Buy partner and internal use only. Do not copy, publish, or distribute. The material in this document is confidential to Best Buy.

Fixture Dimensions

Vendor Expectations

- Activate your presentation across either 4’ (47.875”W) or 8’ (95.875”W) of space, keeping all components beneath the maximum 70”H.

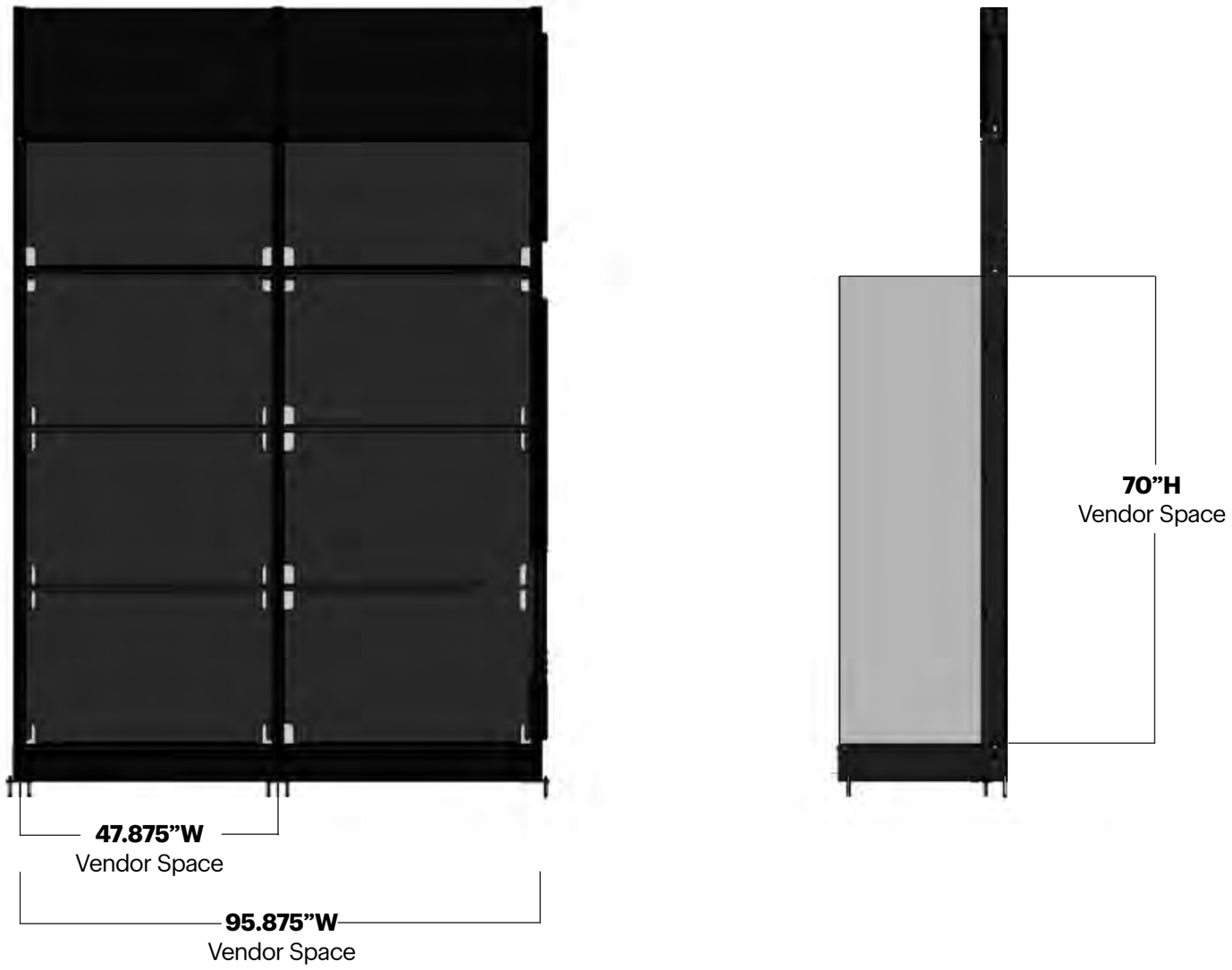

Last Updated August 12, 2026 8:20 AM | Best Buy partner and internal use only. Do not copy, publish, or distribute. The material in this document is confidential to Best Buy.

Power & Attachments

Vendor Expectations

- Securely anchor your display to either the shelf or slotted uprights. (Perforated shelf details at right).
  Note: *Best Buy's perforated 22" shelves are standard in this space. You may provide your own shelf, if desired, but it must not exceed the depth of the fixture's base deck.*
- Secure demo product using approved airline cables, tethers, mechanical fasteners or security devices.
- Purchase electronic security devices from an approved vendor noted in the Technology Design Standards.
- Connect all power to a power strip that is directly connected to a power receptacle. Power strips cannot be daisy-chained.
- Use power cords that are 15' long.
- Neatly organize or hide power cords, plugs, etc. to avoid clutter and cord drape.

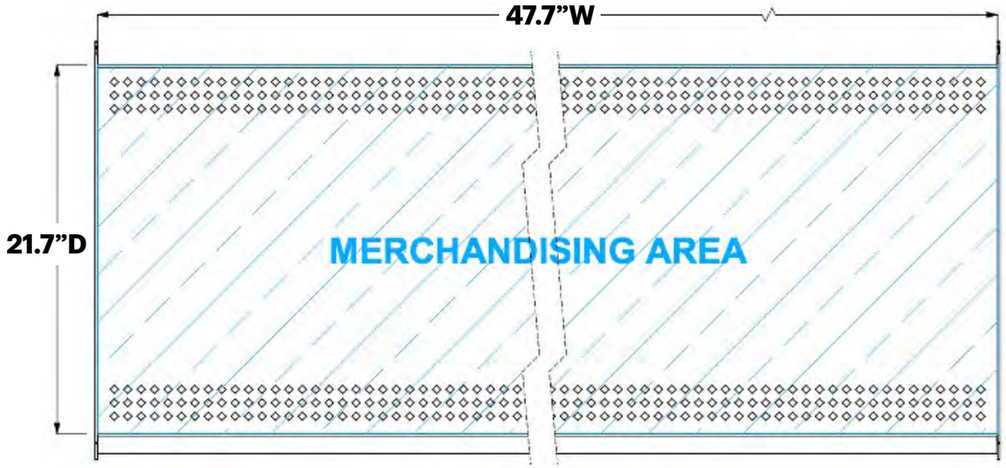

Perforated Shelf

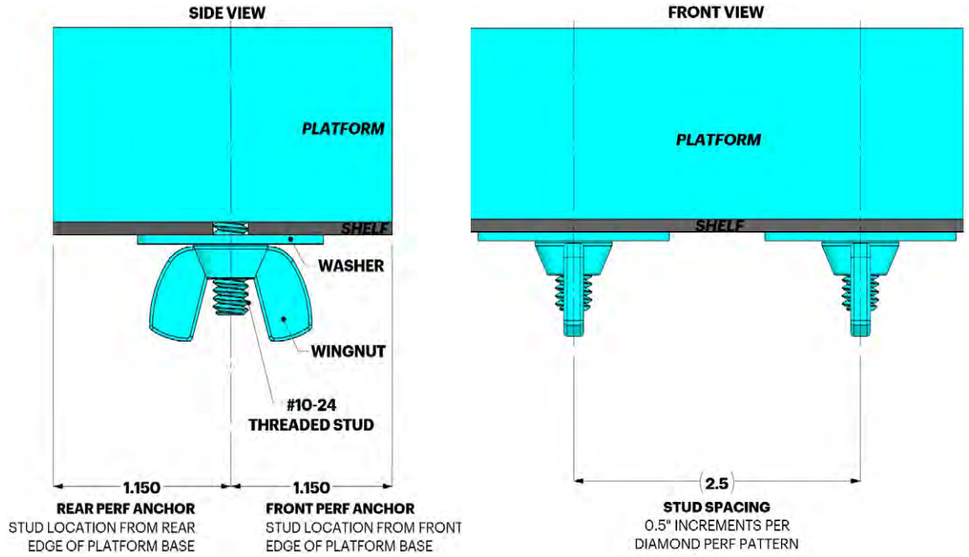

Perforated Shelf Attachment

Find more details and dimensions in this guide on Partner Portal:

Technology Design Standards

Last Updated August 12, 2026 8:20 AM | Best Buy partner and internal use only. Do not copy, publish, or distribute. The material in this document is confidential to Best Buy.

Graphics

Vendor Expectations

- Use ambient, neutral-colored backer graphics behind your products to brand and unify your display.
  Note: *Copy and iconography are not permitted on the backer or around the product top and sides.*
- Size your backer graphics according to the required width shown at right. Size their heights according to the planogram shelf heights to ensure your graphics cover the entire fixture back.
- Include shelf liners, if desired. Liners must be securely attached to the shelf.
- Ensure product remains the hero of the presentation. Graphics must enhance—not detract from—the product.
- Include a header with illuminated logo to match existing Best Buy headers. Header must hang on merchandising bars attached to uprights.
  Header size on 4' activation: 47.938"W x 6"H
  Header size on 8' activation: 95.875"W x 6"H
  Logo/logotype size: 3"H maximum, centered

Best Practice

- Prioritize educational material on the monitor or as a stand-alone graphic.

**Drawings and models of all parts available upon request.*

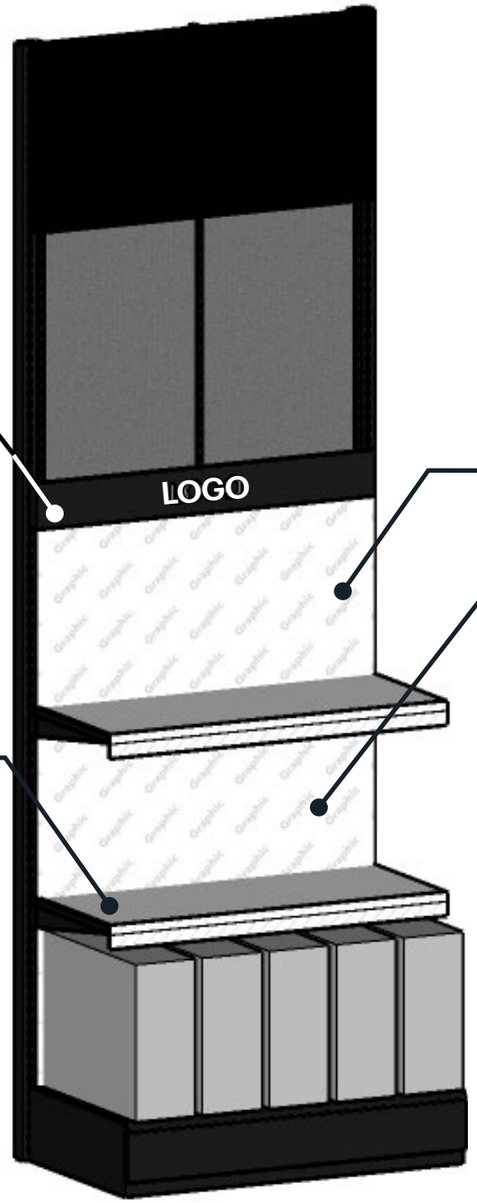

Header

Size (4'): 47.938"W x 6"H
Size (8'): 95.875"W x 6"H
Substrate: 180cv3 with 8520 matte overlam, white

Shelf Liner

Size: 47.7"W x 21.7"D
(if using Best Buy's 22" shelf)
Substrate: Vendor's choice. Must be securely attached to shelf.

Backer Graphics

Size: 47.938"W.
Graphic heights vary based on shelf heights; ensure graphics cover entire fixture back.
Substrate: .1875 Ultraboard, White

Last Updated August 12, 2026 8:20 AM | Best Buy partner and internal use only. Do not copy, publish, or distribute. The material in this document is confidential to Best Buy.

Integrated Technology

Integrated technology must align with the Technology Design Standards on Partner Portal. Best Buy's Technology Design Lab must approve any working electrical components.

Lighting

- Backlighting, downlighting, lit platforms, shelf lighting and under-cabinet lighting is not permitted.
- Lit logos in headers and illumination naturally emitted from display products and monitors are permitted.
- The LED strip in the perimeter header light panel must be centered. Refer to part #1025016 for details.
    - — Perimeter headers must have an illuminated logo with a luminance range of 4000–7000 LUX.

Touch

- All interactive buttons and touch components must meet ADA requirements.

Merchandising

Vendor Expectations

- Activate your presentation across either 4' (47.875"W) or 8' (95.875"W) of space, keeping all components beneath the maximum 70"H.
- Design modular display components to ensure your presentation can seamlessly transfer to alternate fixtures in the future, if needed.
- Place shelves at appropriate heights to accommodate salable box stock below your display monitors (printed representational stand-ins of monitors are not permitted).
    - ***Note***: *A third monitor may be merchandised in place of salable box stock. Ask your Best Buy contact for details.*
- Ensure display monitors remain within the allotted height, width and depth of the fixture.
- Support all products with a proximally located Electronic Shelf Label (ESL). Ask your Best Buy contact for ESL attachment recommendations.





Last Updated August 12, 2026 8:20 AM | Best Buy partner and internal use only. Do not copy, publish, or distribute. The material in this document is confidential to Best Buy.

Fixture Parts

Refer to the part numbers below when ordering any necessary components:

Fixture Component	Best Buy Part Number
Perimeter Header Example, 4’W x 6”H	1025021
Perimeter Header Light Panel Assembly, 14”W x 6”H	1025016
Perimeter Header Light Panel Housing Assembly, 14.69”W x 5.75”H	1025013
Standard (Perforated) Shelf, 22”D	1012251

Last Updated August 12, 2026 8:20 AM | Best Buy partner and internal use only. Do not copy, publish, or distribute. The material in this document is confidential to Best Buy.

Perimeter Racking

Black perimeter racking

Guidelines:

- Vendors can either utilize all BBY kit of parts to outfit their space or they can provide a VPP that will fit into our perimeter racking.
- Vendor can provide graphic(s) to their space
- Number of graphics and graphic dimensions determined by vendor.
- Display and graphics cannot exceed 120" A.F.F.
- Graphic thickness should be as minimal as possible; thickness should be determined on material substrate/functional pieces (i.e., light panel thickness, monitor thickness) not aesthetics.
- Product display areas not to exceed the depth of base deck.
- All merchandising/display fixtures and placement selected by vendor must meet ADA requirements.
- All product displayed must have pricing. Reference the ESL guideline document.
- Any buttons or touch interactives **must follow ADA guidelines,** guidelines provided by Best Buy.

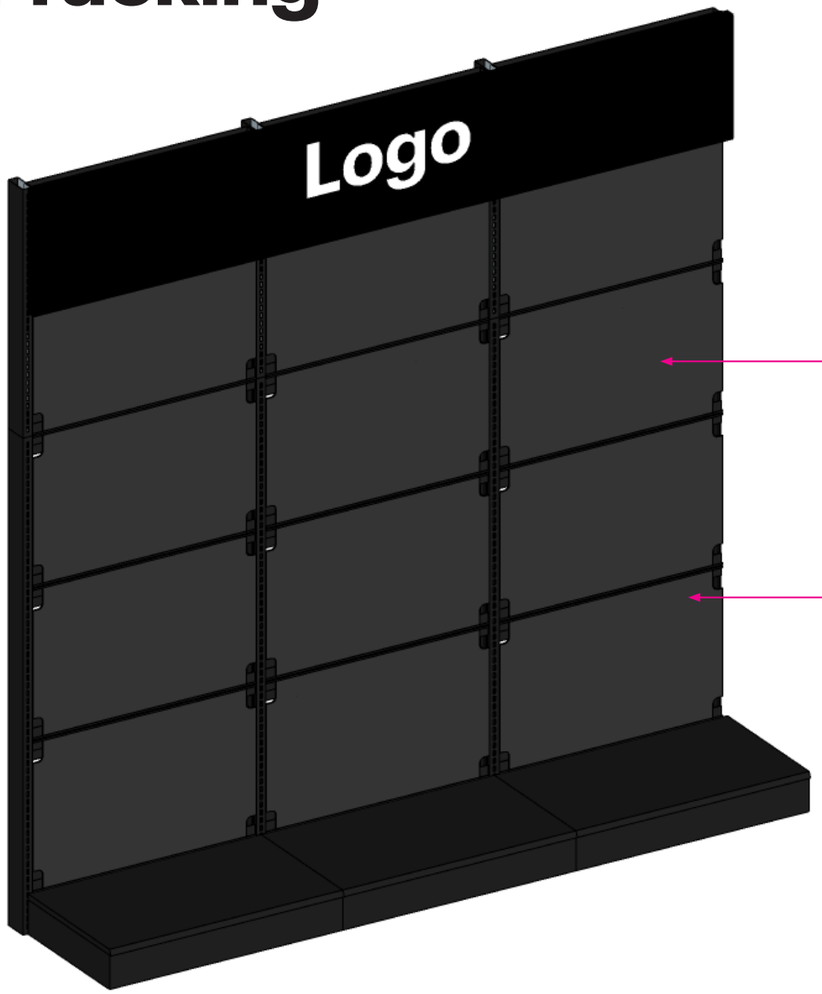

Graphic Options

- Lightbox(es)
- Static graphic(s) (styrene, fabric, etc.)
- Monitor(s), BBY has a monitor

Product Display Area

- Cannot exceed base deck.
- All merchandising/display fixtures and placement selected by vendor **must meet ADA requirements.**
- For all display product and box stock product, ESL pricing tags need to be incorporated. BBY has catalog ESL holders. ESL guidelines available upon request.

Last Updated August 12, 2026 8:20 AM | Best Buy partner and internal use only. Do not copy, publish, or distribute. The material in this document is confidential to Best Buy.

Black perimeter racking

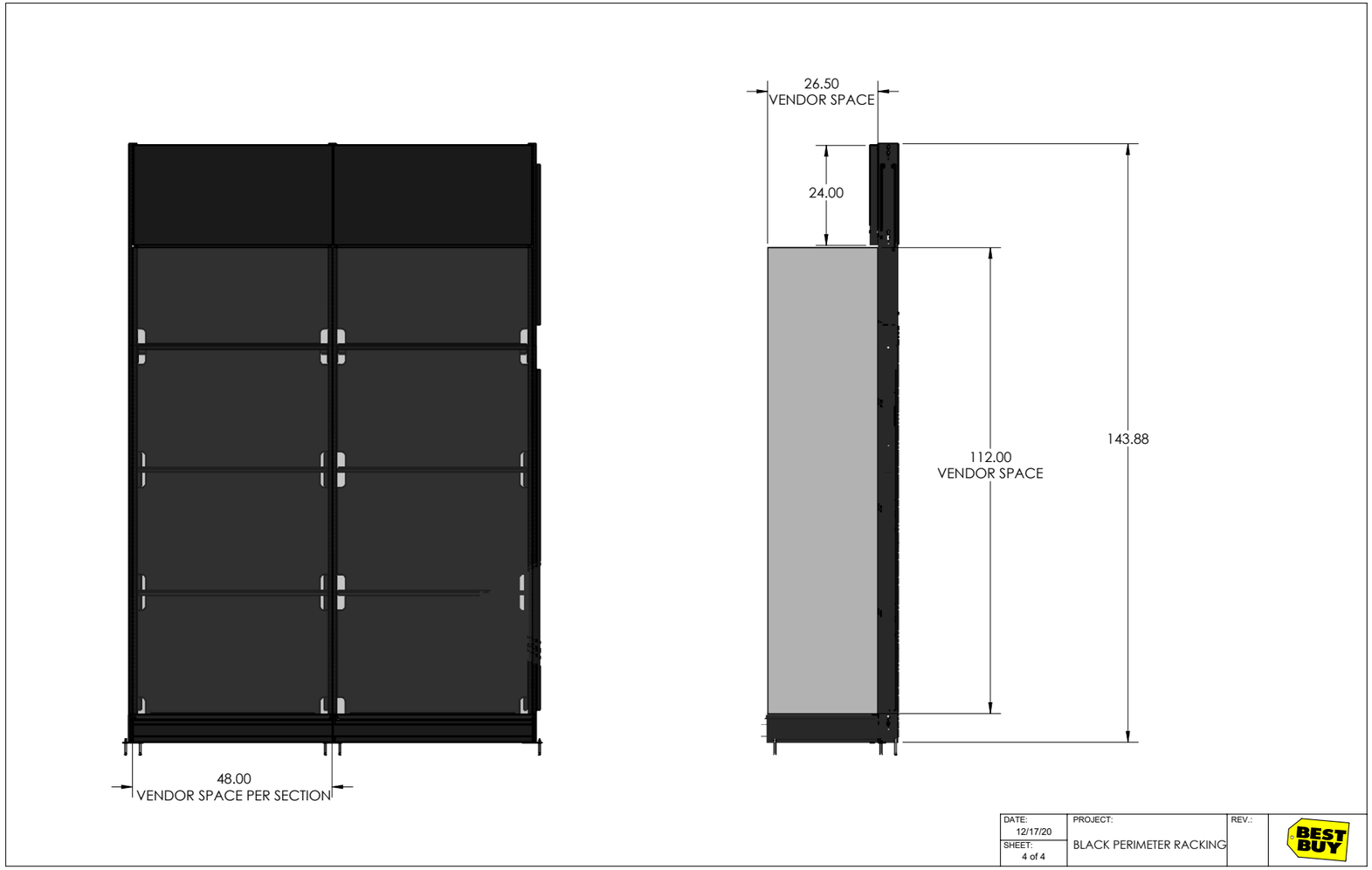

Last Updated August 12, 2026 8:20 AM | Best Buy partner and internal use only. Do not copy, publish, or distribute. The material in this document is confidential to Best Buy.

Black perimeter racking

Guidelines:

- To the right is the bare bones fixture package for this space, all BBY provided
- Vendors must keep the BBY-provided black headers in their space
- Vendors must use the BBY perimeter racking in their space
- Vendors can either utilize all BBY kit of parts to outfit their space, or they can provide a VPP that fit into BBY perimeter racking

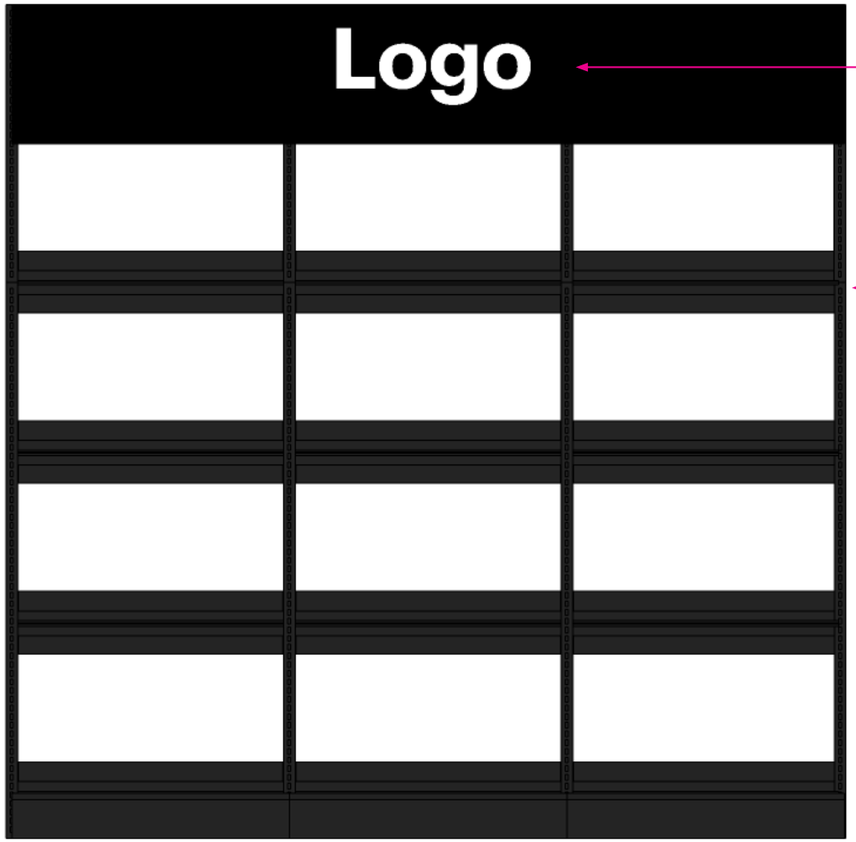

Black band lit logos (BBY provided, vendor-approved artwork)

BBY perimeter racking

- VPP or BBY kit of parts will utilize this stucture for attachment/ positioning
- Perimeter racking drawings and models available upon request

Last Updated August 12, 2026 8:20 AM | Best Buy partner and internal use only. Do not copy, publish, or distribute. The material in this document is confidential to Best Buy.

Black perimeter racking

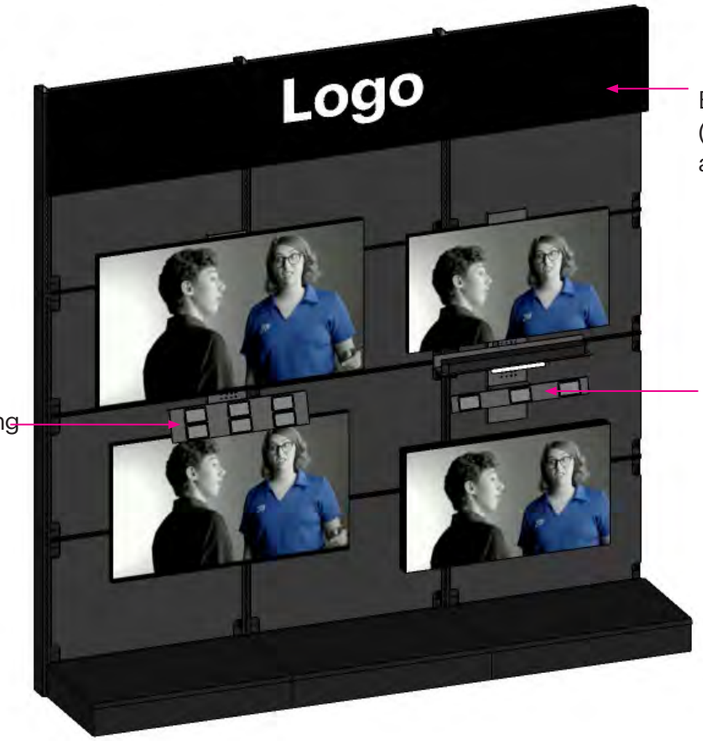

Black band lit logos (BBY provided - vendor-approved artwork)

Monitor mounting system with double platform for pricing between 2 TVs

Monitor mounting system with soundbar shelf and platform for pricing

1

Utilizing BBY black 4-foot-on-center perimeter racking and BBY merchandising kit of parts (visual is for inspiration only, vendor can mix and match merchandising fixtures as desired)

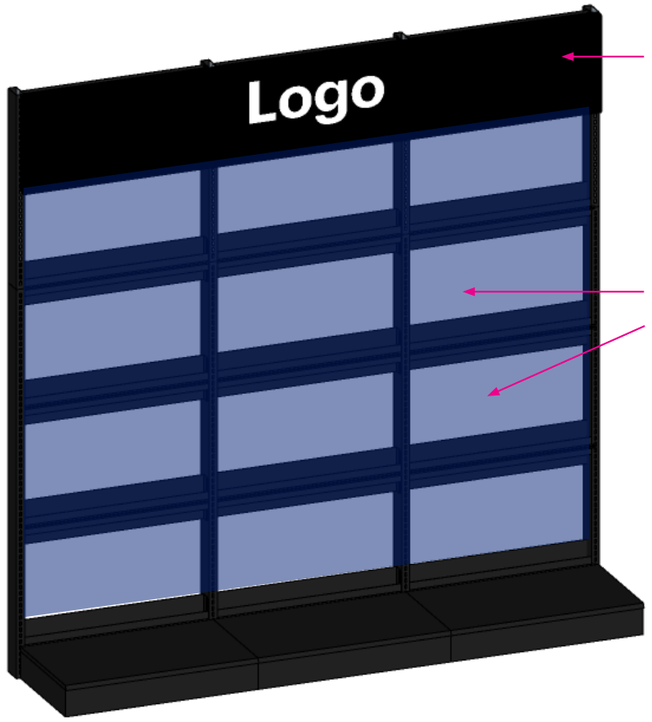

Black band lit logos (BBY provided - vendor-approved artwork)

Graphics and product display all VPP

2

Utilizing BBY black 4-foot-on-center on center perimeter racking and creating a VPP to outfit the rest of the space

Last Updated August 12, 2026 8:20 AM | Best Buy partner and internal use only. Do not copy, publish, or distribute. The material in this document is confidential to Best Buy.

Black perimeter racking

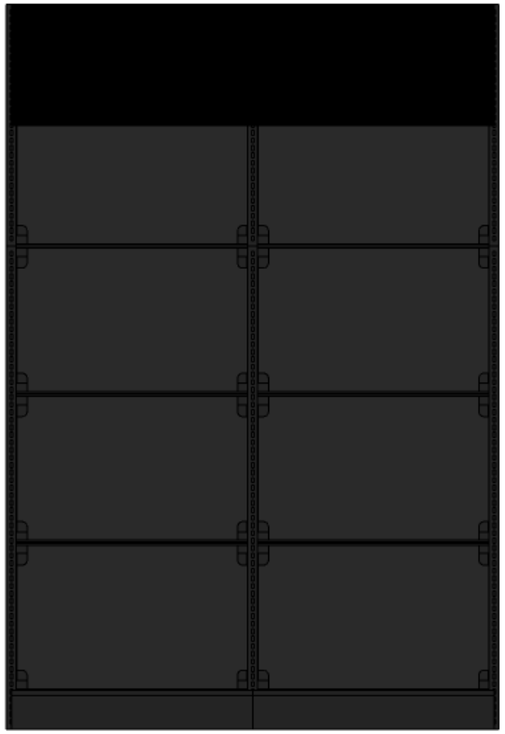

1

Black 4-foot-on-center perimeter racking with BBY specified finish for backers (Gem-Lite Stone Grey)

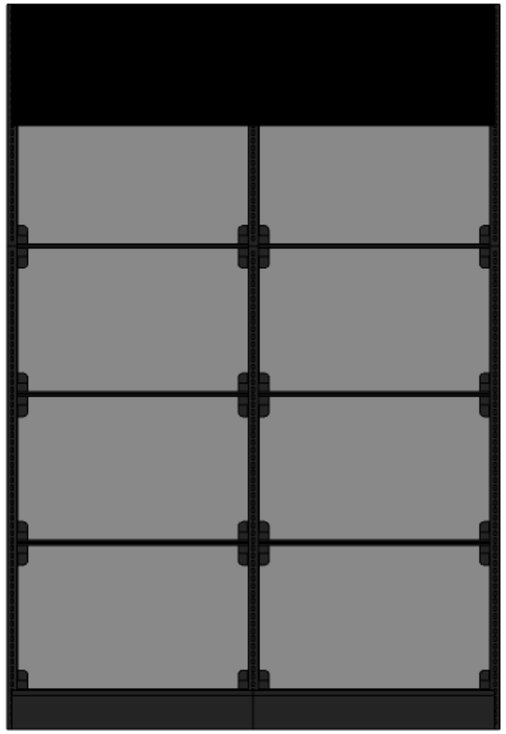

2

Black 4-foot-on-center perimeter racking with vendor spec finish for backers

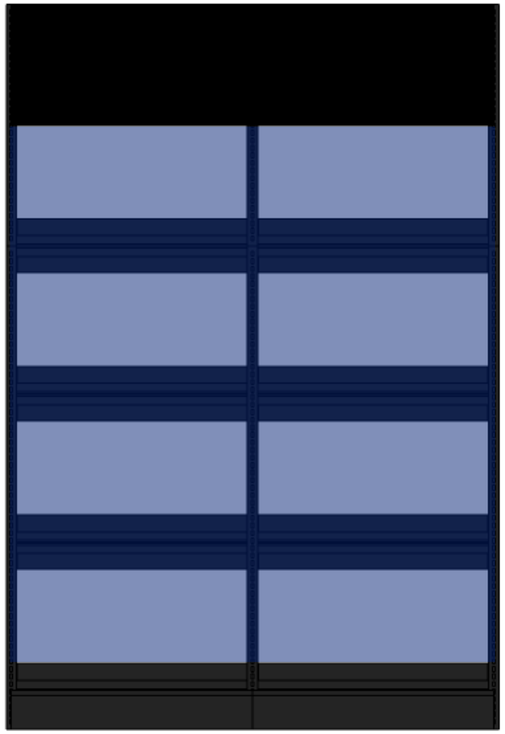

3

Black 4-foot-on-center perimeter racking with unique-to-vendor VPP backdrop

Last Updated August 12, 2026 8:20 AM | Best Buy partner and internal use only. Do not copy, publish, or distribute. The material in this document is confidential to Best Buy.

Black perimeter racking

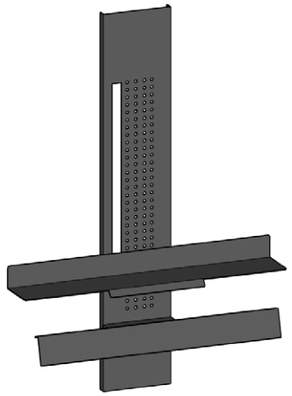

1

soundbar shelf - single ESL
- supports monitor
- supports soundbar
- holds 1 row of ESLs

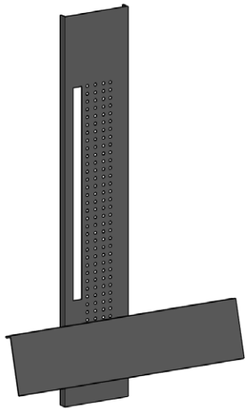

2

double ESL holder
- supports monitor
- holds 2 rows of ESLs



3

plasma mount with trough



4

standard shelf options (all black)
- 12"d x 48"w
- 14"d x 48"w
- 18"d x 48"w
- 22"d x 48"w



5

48" on center merchandising bar

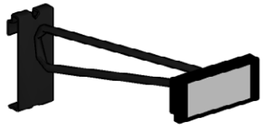

6

peg hooks for merch bars
- 4" black
- 8" black
- 12" black
- 16" black

Note:
See ESL guidelines, provided by Best Buy, for ESL placement and what is used to attach the ESL price tags.

Last Updated August 12, 2026 8:20 AM | Best Buy partner and internal use only. Do not copy, publish, or distribute. The material in this document is confidential to Best Buy.

Perimeter Wall Graphics

Fixture & Graphic Overview

The perimeter wall fabric graphic allows you to complement your display with an exciting visual that represents your brand.

Vendor Expectations

- Choose an image with Best Buy's priorities in mind:

  Priority one: Lifestyle imagery of humans and products in an environment.

  Priority two: Lifestyle imagery of products in an environment.

  Priority three: Product imagery on a neutral color field.
- Crop the image to ensure the product is clearly visible and figures/products are largely centered.
- Include only permitted visuals. Copy and non-product-based logos are **not** permitted.

**Drawings and models of all parts available upon request.*



Last Updated August 12, 2026 8:20 AM | Best Buy partner and internal use only. Do not copy, publish, or distribute. The material in this document is confidential to Best Buy.

Frame Dimensions & Installation Details

Vendor Expectations

- Anchor the frame to the slotted perimeter uprights. Refer to the drawings and models for parts #1024321 and #1024501 for details and required mounting hardware.

Installation

1. Unpack and assemble frame on ground using extrusions and corner keys.
2. Attach and fully tighten “top” upright brackets in thru-holes.
3. Attach and loosely tighten “bottom” upright brackets in slotted holes.
4. Attach frame to uprights in desired location. Adjust lower brackets in slots as needed to fit to uprights.
5. Fully tighten lower brackets.
6. Install graphic in frame.

**Note:* *Graphics are non-powered, thus not illuminated.*

4’ Perimeter Wall Fabric Graphic
#1024321



8’ Perimeter Wall Fabric Graphic
#1024501

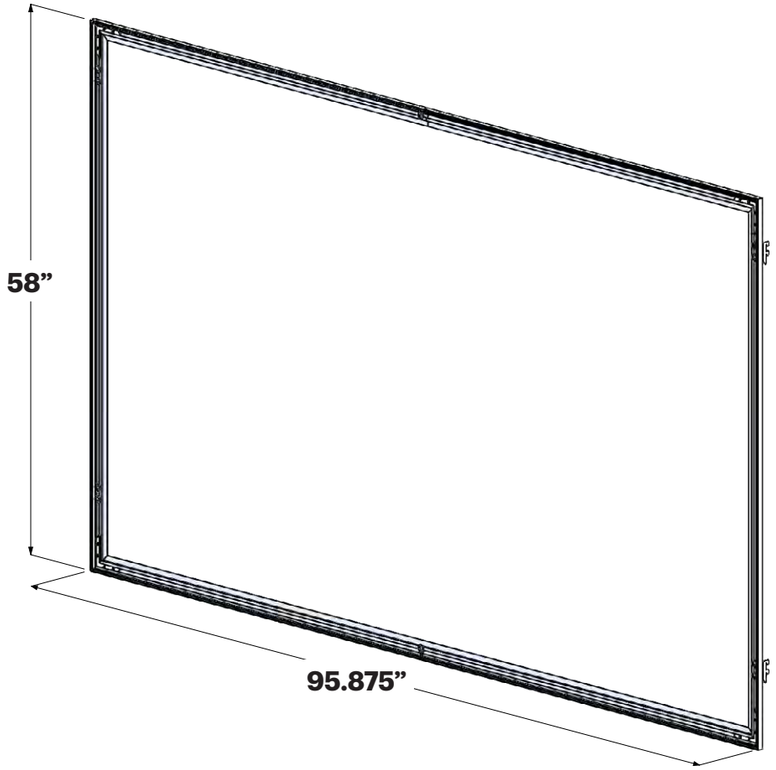

Shown dimensions are frame edge to edge only, see following page for graphic dimensions.

Last Updated August 12, 2026 8:20 AM | Best Buy partner and internal use only. Do not copy, publish, or distribute. The material in this document is confidential to Best Buy.

Graphic Dimensions & Printing Specs

Print Specs

- **4’ Perimeter Wall Fabric Graphic**
  Flat Size: 49.875” x 60”
  Finished size: 47.875 x 58
  Colors: CMYK
  Substrate: Lumaflex
  Finishing: Sew or heat weld 3mm x 13.3mm keder size around the entire graphic. Refer to drawing for details

- **8’ Perimeter Wall Fabric Graphic**
  Flat Size: 97.875 x 60
  Finished size: 95.875 x 58
  Colors: CMYK
  Substrate: Lumaflex
  Finishing: Sew or heat weld 3mm x 13.3mm keder size around the entire graphic. Refer to drawing for details

Expectations

- Ensure the fabric graphic utilizes a 3mm keder.
- No fabric substrate substitutes are allowed.
- Frame and graphic dimensions must be matched exactly to ensure seamless fit.
- **Graphic fit must be verified by Best Buy prior to full manufacture and shipping to stores (first article approval).**

Last Updated August 12, 2026 8:20 AM | Best Buy partner and internal use only. Do not copy, publish, or distribute. The material in this document is confidential to Best Buy.

Perimeter Wall Standards

Black wall standards

Guidelines:

- Vendors can either utilize all BBY kit of parts to outfit their space, or they can provide a VPP that fit into our wall standards.
- Vendor can provide graphic(s) to their space
- Number of graphics and graphic dimensions determined by vendor.
- Display and graphics cannot exceed 120" A.F.F.
- Graphic thickness should be as minimal as possible, thickness should be determined on material substrate/functional pieces (light panel thickness, monitor thickness, etc.) not on aesthetics.
- Product display areas should not exceed 24"-depth-off-the-wall standard.
- All merchandising/display fixtures and placement selected by vendor **must meet ADA requirements.**
- All product displayed must have pricing. Reference the Best Buy ESL guideline document.

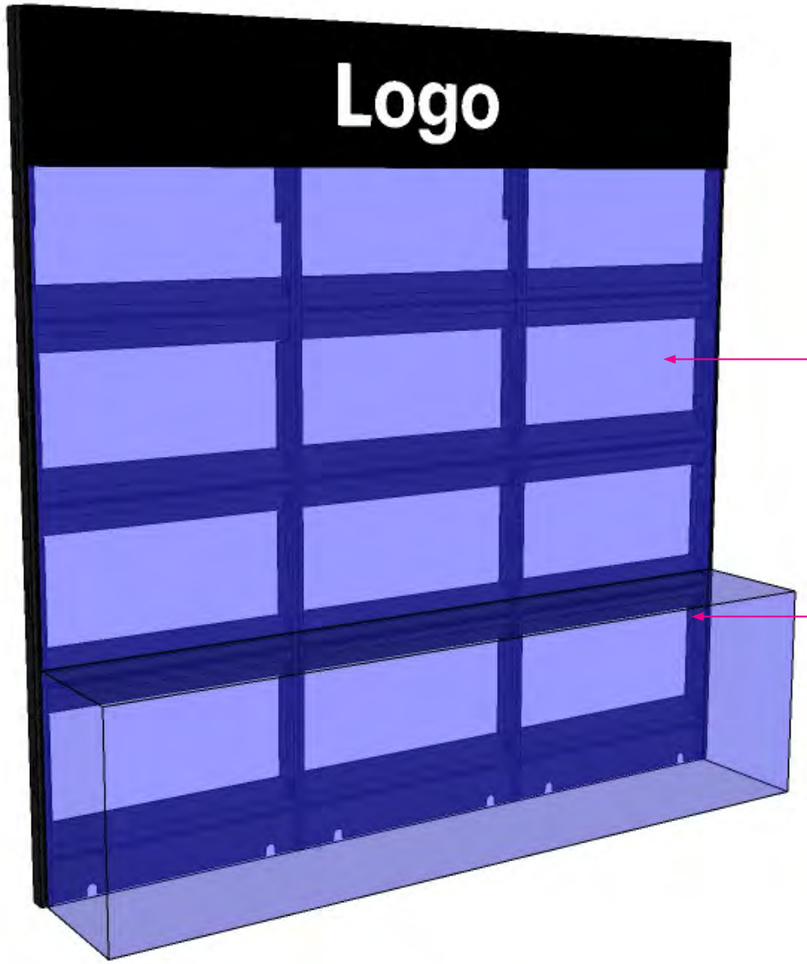

Graphic options

- lightbox(es)
- static graphic(s) (styrene, fabric, etc.)
- monitor(s), BBY has a monitor

Product display area

- cannot exceed 24" depth
- all merchandising/display fixtures and placement selected by vendor **must meet ADA requirements**
- ESL pricing tags need to be incorporated into all display, box and stock product

Last Updated August 12, 2026 8:20 AM | Best Buy partner and internal use only. Do not copy, publish, or distribute. The material in this document is confidential to Best Buy.

Black wall standards

Guidelines:

- Shown is the bare bones fixture package for this space, all BBY-provided.
- Vendor's must keep the BBY-provided black header in their space
- Vendor's must use the BBY wall standards in their space
- Vendor's can either utilize all BBY kit of parts to outfit their space, or they can provide a VPP that fits into BBY wall standards

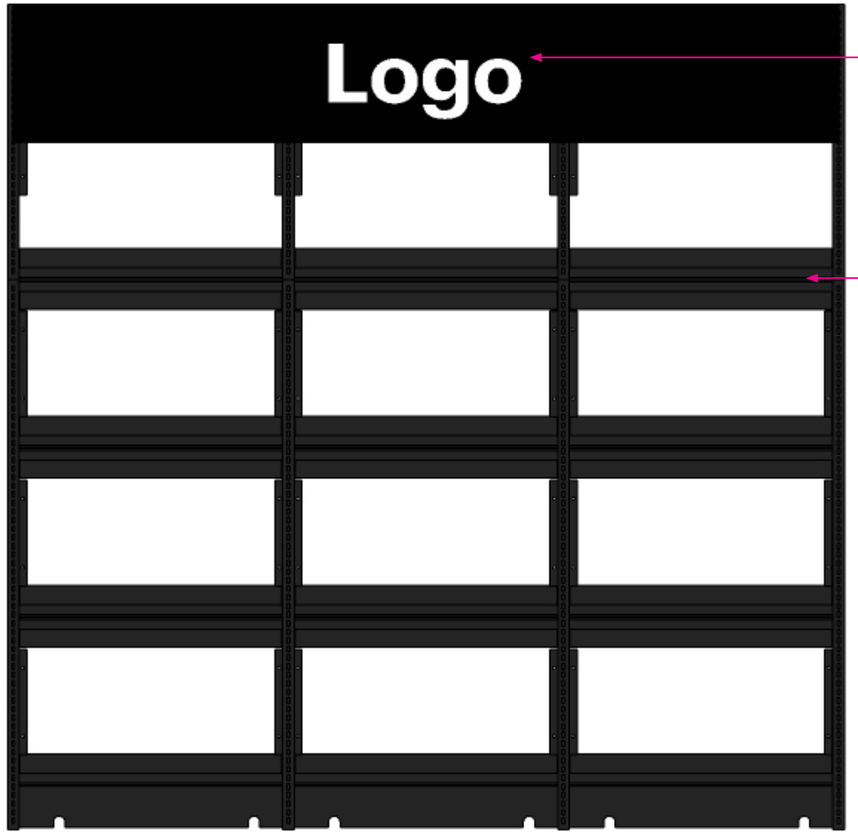

Black band lit logos (BBY provided, vendor-approved artwork)

BBY wall standards

- weight load maximum: 350lbs per 4ft section
- VPP or BBY kit of parts will utilize these wall standards for attachment/positioning
- Wall standard drawings and models available upon request.

Last Updated August 12, 2026 8:20 AM | Best Buy partner and internal use only. Do not copy, publish, or distribute. The material in this document is confidential to Best Buy.

Black wall standards

COPYRIGHT © - SEE SHEET 1

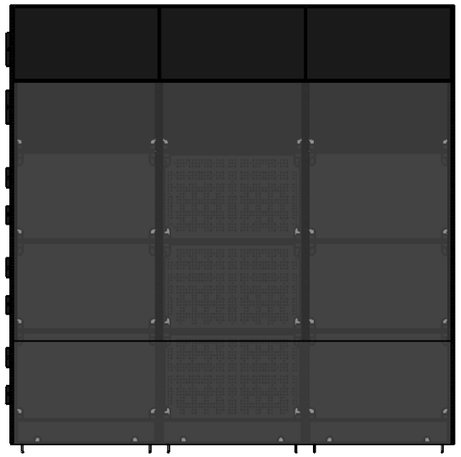

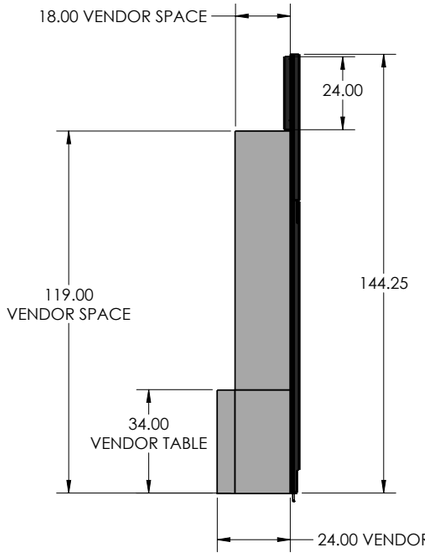

ITEM NO.	PART NUMBER	DESCRIPTION	QTY.
1	1013990	BLACK WALL STANDARDS DISPLAY - STARTER	1
2	1013989	BLACK WALL STANDARDS DISPLAY - ADD-ON	2
3	1016243	4FT. WALL STANDARDS DISPLAY - STARTER	1
4	1016242	4FT. WALL STANDARDS DISPLAY - ADD ON	2
5	1013768	PERIMETER WALL HEADER - BLANK	3
6	1012975	PANEL, PERIMETER RACKING BACKER - 45.875" X 28.875"	6
7	1012978	PANEL, PERIMETER BACKER, 4' EXTENSION	3
8	1017053	TUBE, ADD-ON UPRIGHTS - BLACK WALL STANDARDS DISPLAY	6
9	1017054	PANEL, PEGBOARD, HOOK IN - BLACK WALL STANDARDS DISPLAY	3

NOTE:
CAN ONLY COME OUT TO 24" IF USING A TABLE THAT GOES TO THE FLOOR AND HAS SIDES FOR ADA COMPLIANCE

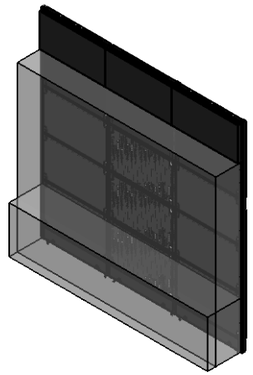

SCALE: 1:32	DRAWING NO.:	REV.:	BEST BUY
SHEET: 3 of 3			

Last Updated August 12, 2026 8:20 AM | Best Buy partner and internal use only. Do not copy, publish, or distribute. The material in this document is confidential to Best Buy.

Black wall standards

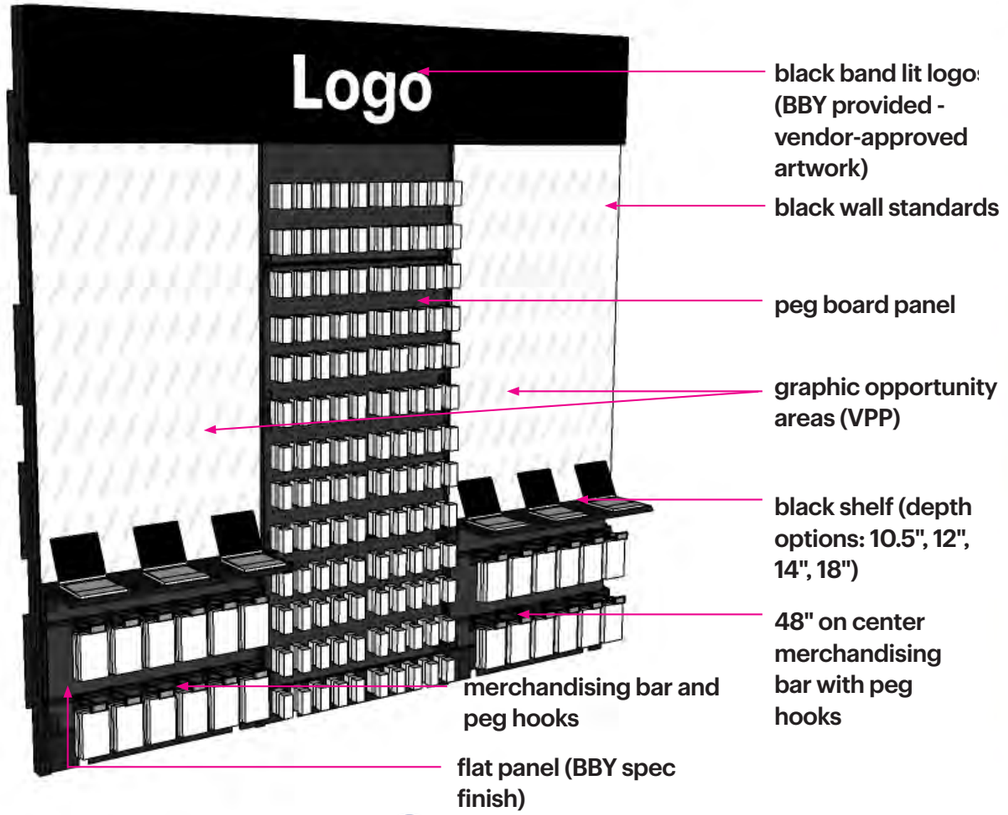

1

Utilizing BBY black 4-foot-on-center wall standards and BBY merchandising kit of parts (visual is for inspiration only, vendor can mix and match merchandising fixtures as desired)

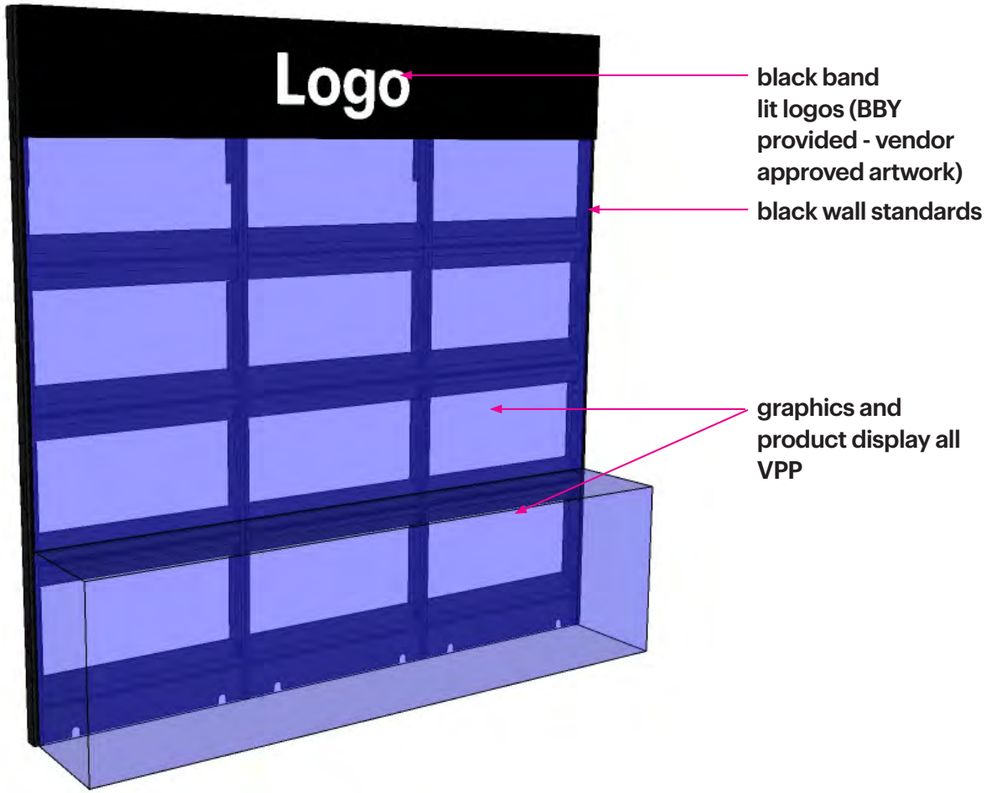

2

Utilizing BBY black 4-foot-on-center wall standards and creating a VPP to outfit the rest of the space

Last Updated August 12, 2026 8:20 AM | Best Buy partner and internal use only. Do not copy, publish, or distribute. The material in this document is confidential to Best Buy.

Black wall standards

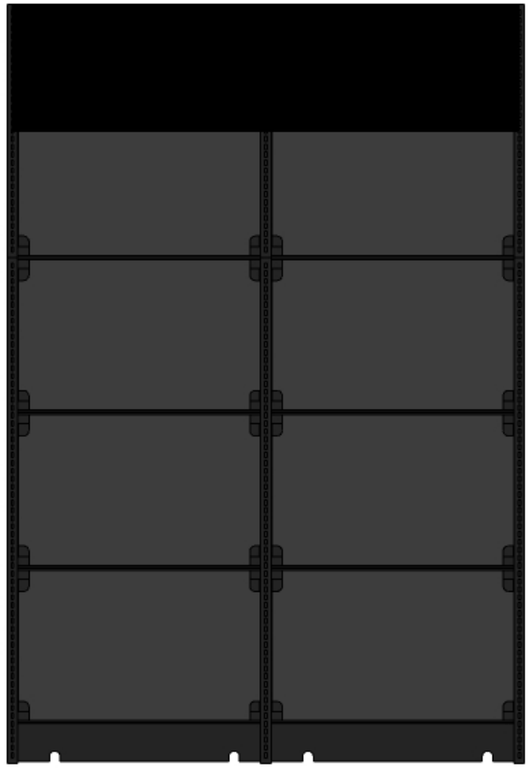

1

Black 4-foot-on-center wall standards with BBY-specified finish for backers (Gem-Lite Stone Grey)

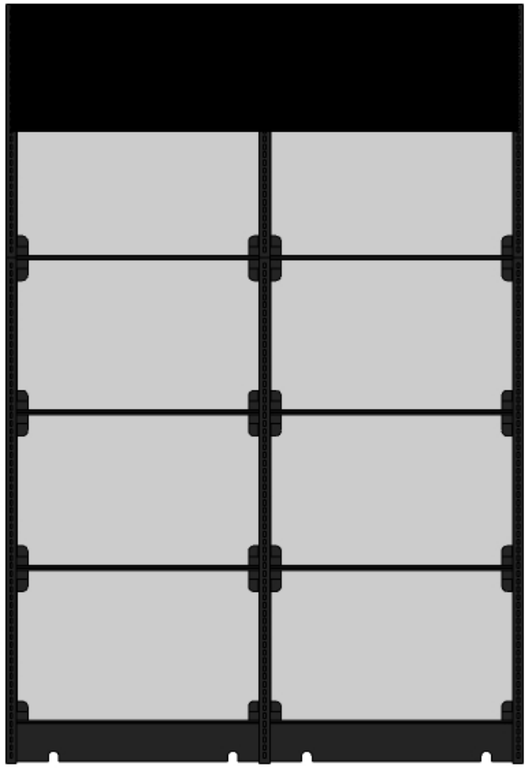

2

Black 4-foot-on-center wall standards with vendor spec finish for backers

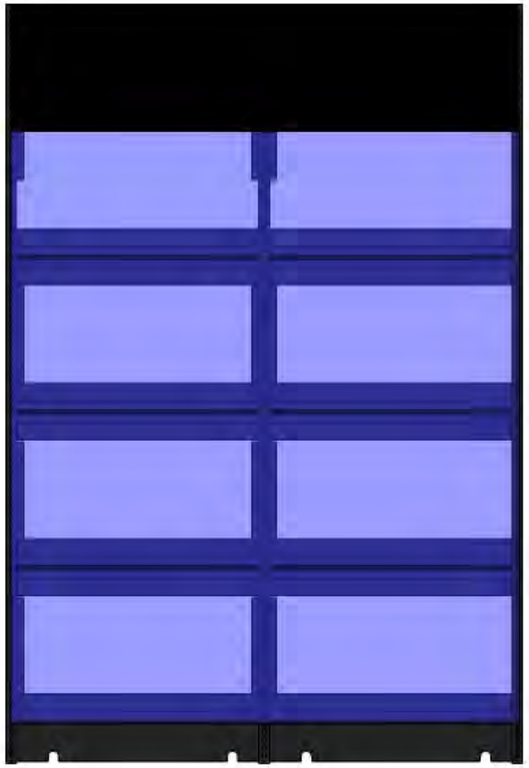

3

Black 4-foot-on-center wall standards with unique-to-vendor VPP backdrop

Last Updated August 12, 2026 8:20 AM | Best Buy partner and internal use only. Do not copy, publish, or distribute. The material in this document is confidential to Best Buy.

Black wall standards

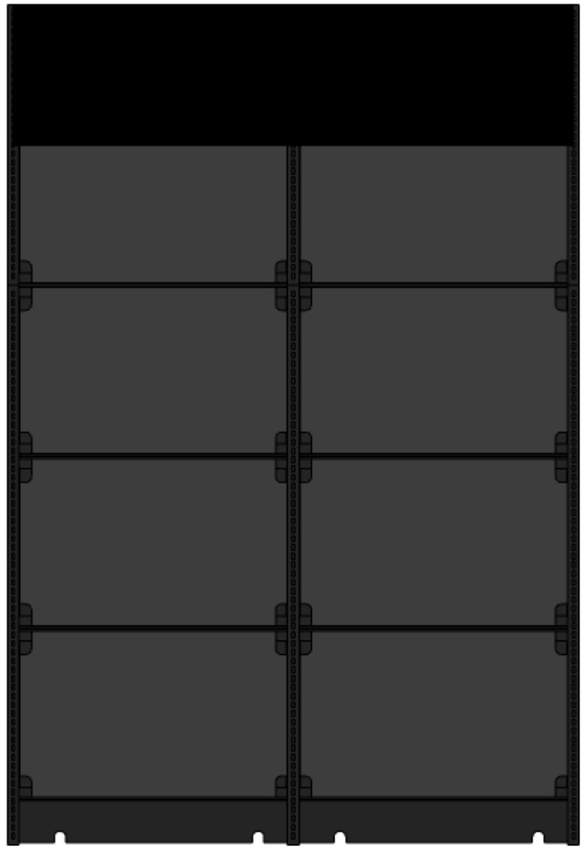

Backer options

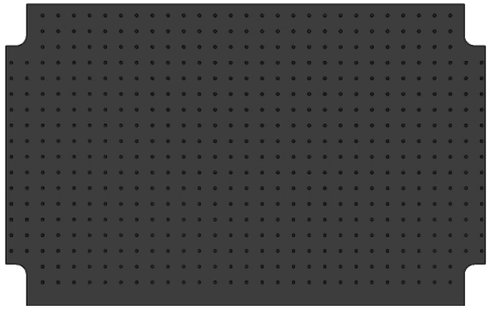

1

pegboard panel



2

flat panel

Last Updated August 12, 2026 8:20 AM | Best Buy partner and internal use only. Do not copy, publish, or distribute. The material in this document is confidential to Best Buy.

Black wall standards



1

48" on center merchandising bar + peg hooks

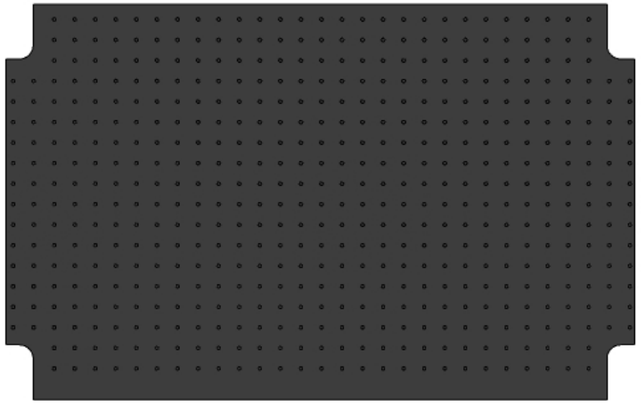

3

pegboard backer + peg hooks



5

standard shelf options (all black)
- 10.5"d x 48"w
- 12"d x 48"w
- 14"d x 48"w
- 18"d x 48"w

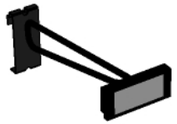

2

peg hooks for merch bars
- 4" black
- 8" black
- 12" black
- 16" black

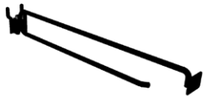

4

peg hooks for pegboard panel
- 4" black
- 8" black
- 12" black
- 16" black

Note:
See BBY-provided ESL guidelines for placement and attachment materials.

Last Updated August 12, 2026 8:20 AM | Best Buy partner and internal use only. Do not copy, publish, or distribute. The material in this document is confidential to Best Buy.

Premium Audio Wall

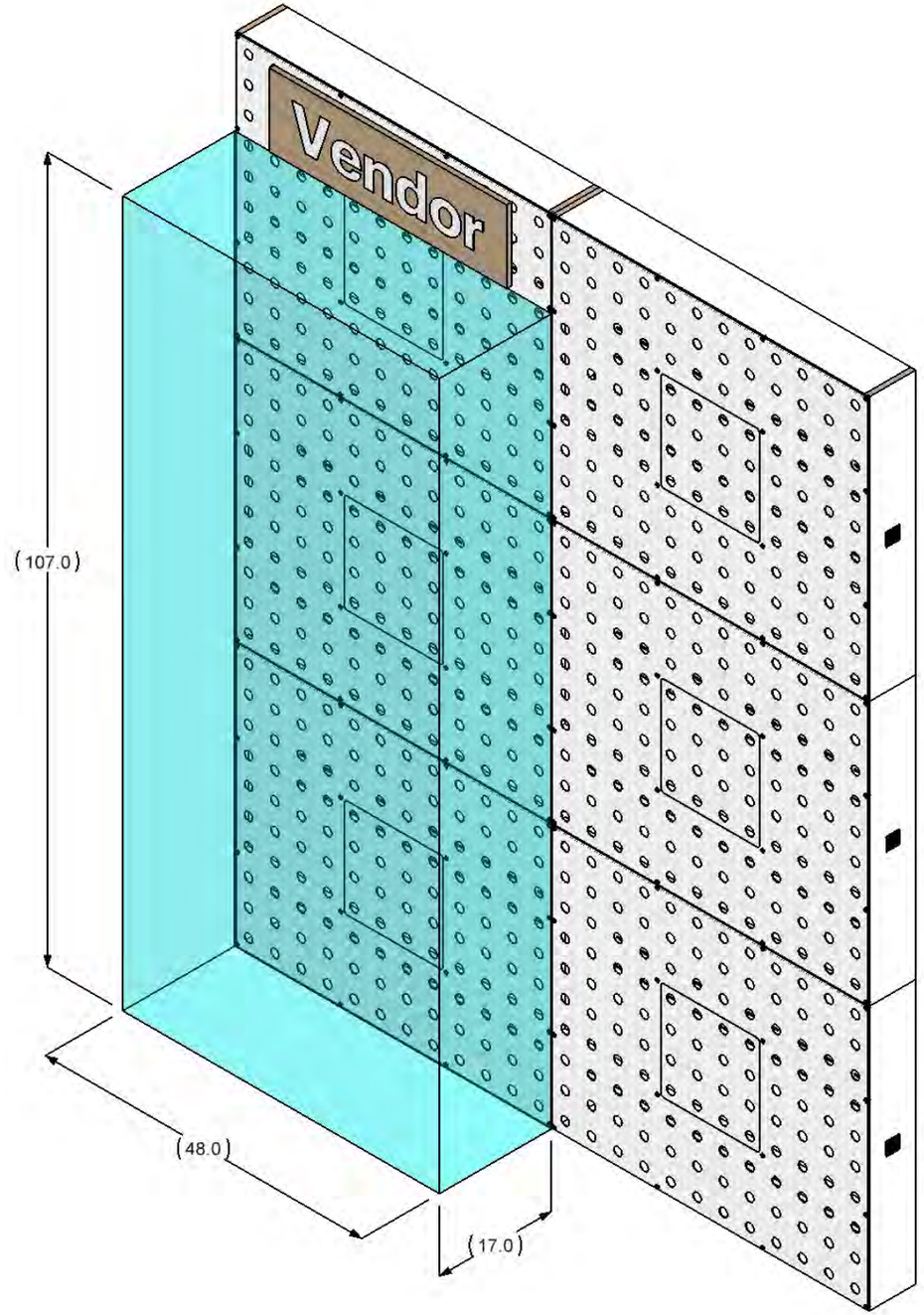

VPD Guidelines

- Vendor provided display must fit within 48” W x 17” D x 107” H space (shown in teal).
- Vendor header panel is used to display logo at the top of the wall as shown – **must follow Best Buy provided design** (reference page 7)
- Vendor can use BBY standard parts & accessories or provide a fully built display that attaches to the wall.
- Wall can support up to **450lb hanging weight per 4’ section** – displays should use leveling feet or similar for heavier cabinets or other features
- Any cables used must be neat and properly managed. Center access panels in each section must remain accessible and removable.
- Vendors can use graphics, monitors, lit signage, and interactive elements at their discretion.
- All merchandising/display fixtures and placement selected by vendor **must meet ADA requirements.**
- All product displayed must have pricing. Reference the Best Buy ESL guideline document.

Last Updated August 12, 2026 8:20 AM | Best Buy partner and internal use only. Do not copy, publish, or distribute. The material in this document is confidential to Best Buy.

VPD Guidelines (continued)

Graphic options

- 29” H x 48” W minimum space allotted for graphics
- Lightbox(es)
- Static graphic(s) (styrene, fabric, etc.)
- Monitors (BBY can provide a spec if desired)
- Graphic thickness should be as minimal as possible, thickness should be determined on material substrate/functional pieces (light panel thickness, monitor thickness, etc.) not on aesthetics.

Product display area

- Displayed product must fall within this 78” H x 17” x 48” W space
- Any interactive product experiences, buttons, touchscreens or activators **must fall within ADA guidelines.**
- ESL pricing tags need to be incorporated into all display, box and stock product

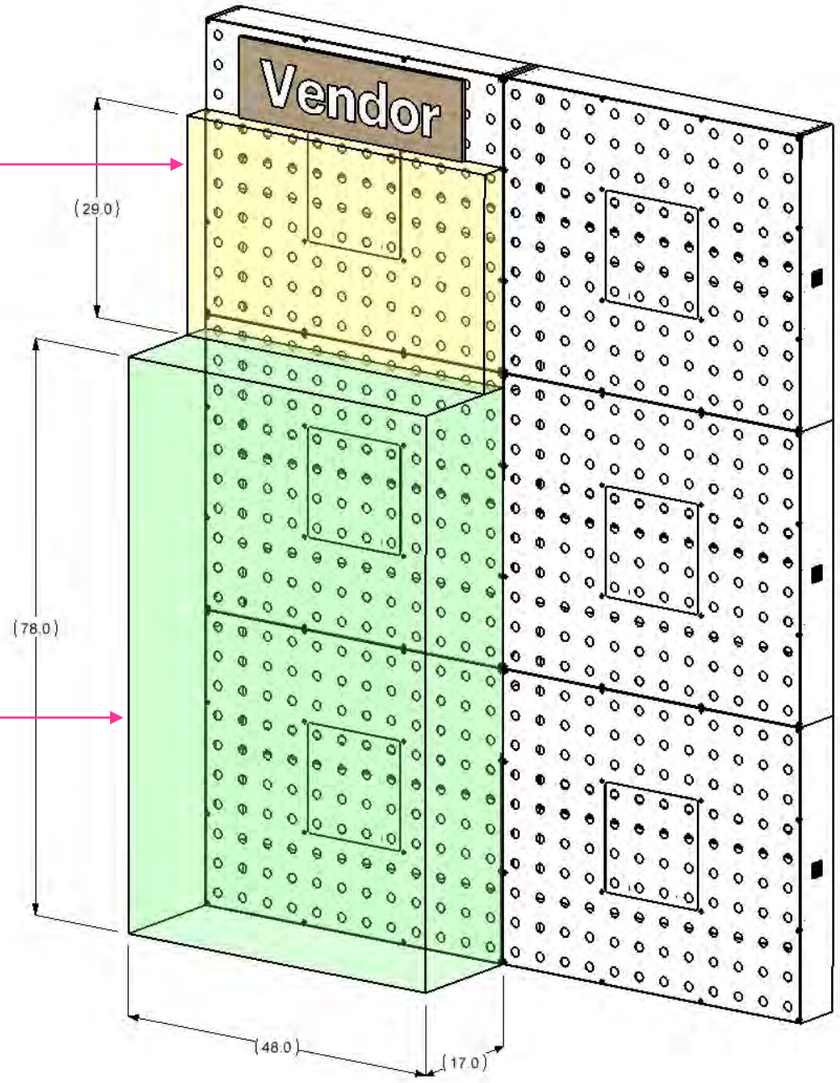

Last Updated August 12, 2026 8:20 AM | Best Buy partner and internal use only. Do not copy, publish, or distribute. The material in this document is confidential to Best Buy.

Vendor Header Requirements

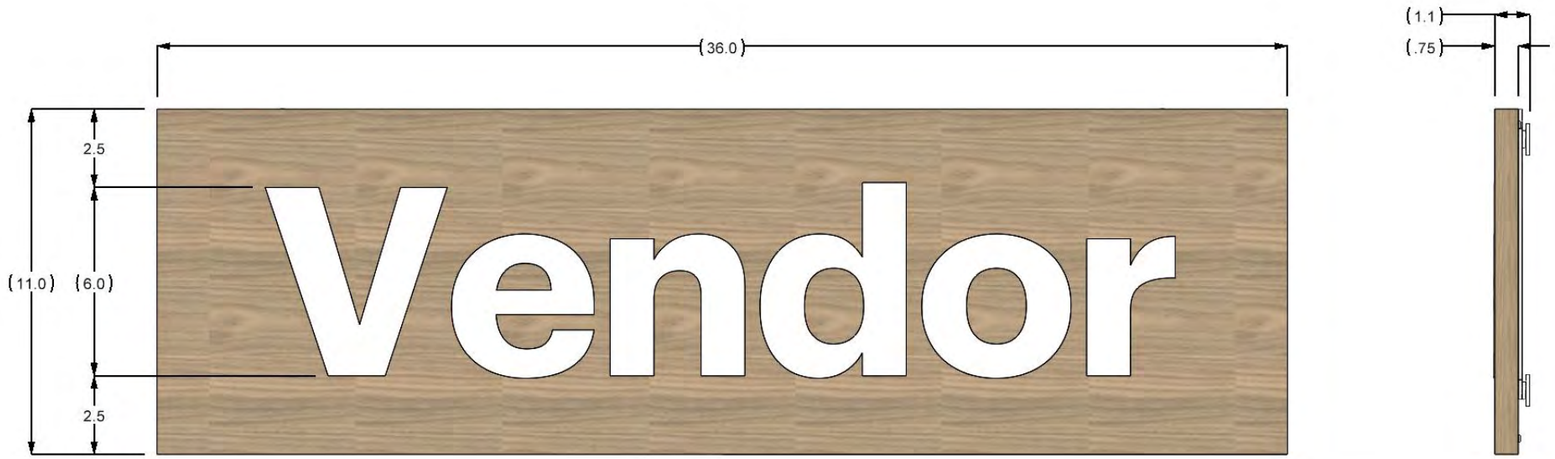





- Vendor header **must follow specific form factor** as prescribed by Best Buy – detailed engineering drawings will be provided by Store Design team
  - ¾” MDF panel membrane pressed in Saarinen Driftwood finish
  - Non-lit logo/letters
  - White vinyl logo/letters at 6” height, centered on panel
  - Metal brackets must be used as designed to hang header panel on wall

Last Updated August 12, 2026 8:20 AM | Best Buy partner and internal use only. Do not copy, publish, or distribute. The material in this document is confidential to Best Buy.

Standard Parts & Accessories

Below are a handful of standard parts & accessories used in the Premium Audio Wall fixture package today. Vendors should use these designs in development/fabrication of their own displays – different concepts will be reviewed by the Store Design team on a case-by-case basis. Additional information/part documentation is available upon request.

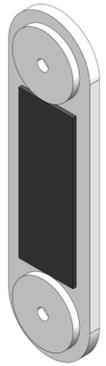

Mount plate
- Allows parts to attach to wall via machine screws

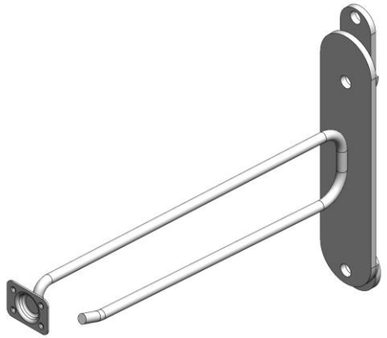

6” peghook



Headphone peg

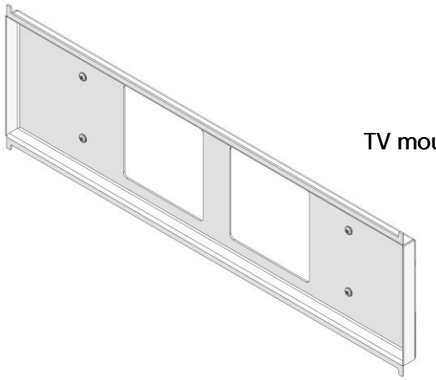

TV mount

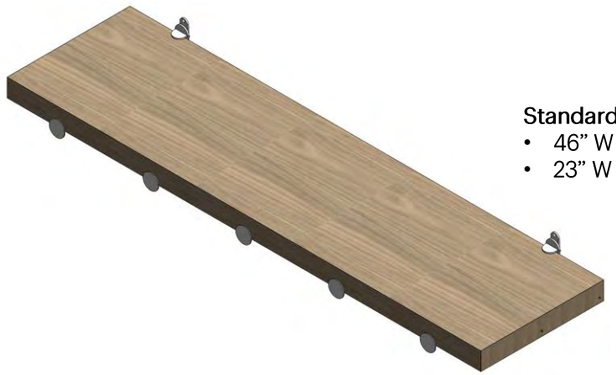

Standard shelf
- 46” W x 12” D (shown)
- 23” W x 12” D

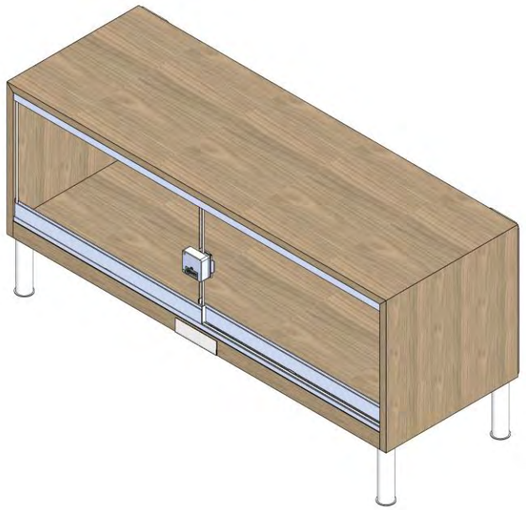

Base cabinet
- 46” W x 16” D (shown)
- 23” W x 16” D
- Locking doors optional

Last Updated August 12, 2026 8:20 AM | Best Buy partner and internal use only. Do not copy, publish, or distribute. The material in this document is confidential to Best Buy.

Merchandising Guidelines

Expectations

- Any interactive product experiences, buttons, touchscreens or activators must fall within ADA guidelines.
- No product/display or shelf may extend beyond 17” from the peg board wall
- The pegboard wall should be visually preserved, no backer panel or wallpaper should be used. Center access panels must remain accessible and removable.
- Separate **outward** facing Peglabel ESLs are needed for every product on display **above** 32” AFF (shown below)
- Separate **upward** facing Peglabel ESLs are needed for every product on display **below** 32” AFF (shown below)

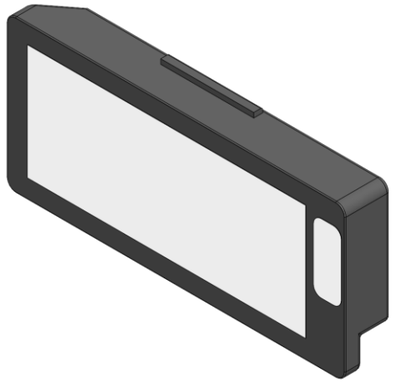

Above 32” AFF

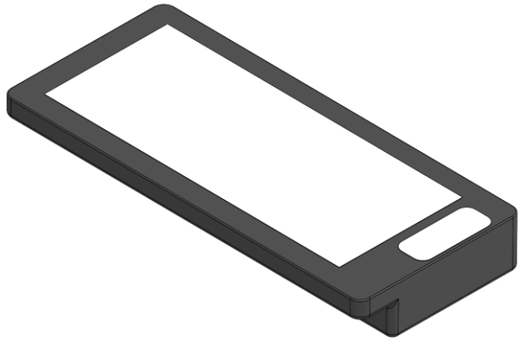

Below 32” AFF

Best Practices

- Make product the hero/focal of the presentation
- Video content and printed graphics should only be used as secondary support
- All non-interactive display product should fall beneath 78” AFF

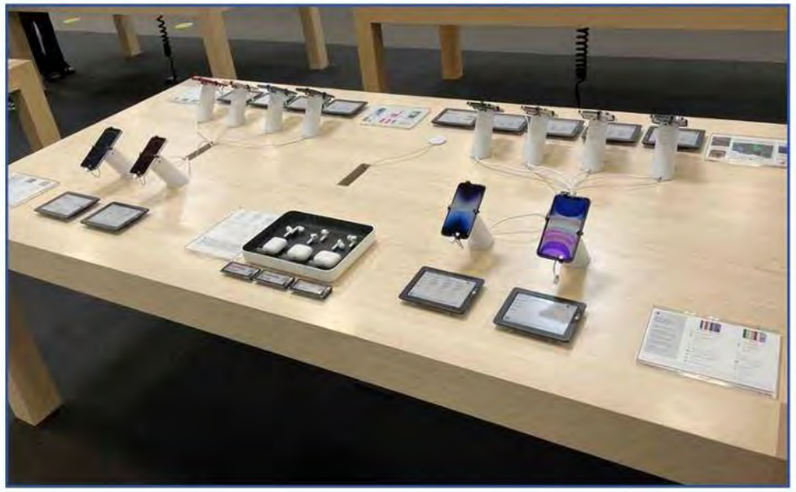





Last Updated August 12, 2026 8:20 AM | Best Buy partner and internal use only. Do not copy, publish, or distribute. The material in this document is confidential to Best Buy.

Recommended Finishes

Listed below are Best Buy's standard finishes for wood/metal fixture components. Vendors should use these finishes (or similar) to integrate their displays more seamlessly into the Best Buy ecosystem.

Wood	Metal
Designer White – Wilsonart D354-60	Powder Coat – Black Extra Fine Texture – Tiger Drylac 049-81241
Laminate – Matte Black – Formica 909-58	Powder Coat – White Fine Texture – Tiger Drylac 049-13150
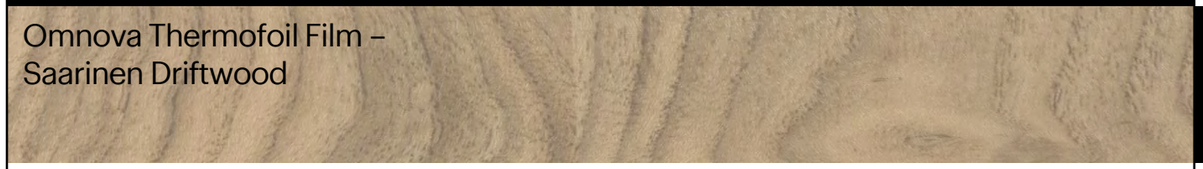 Omnova Thermofoil Film – Saarinen Driftwood	Powder Coat – Gloss Black – Protech Black HS-412N11 Or Equivalent
Omnova Thermofoil Film – Surf(x) – Matte Luxe White	
 Omnova Thermofoil Film – Surf(x) - Concrete Urban Grey	

Last Updated August 12, 2026 8:20 AM | Best Buy partner and internal use only. Do not copy, publish, or distribute. The material in this document is confidential to Best Buy.

Premium Home Audio Large Concept

Overview

The Premium Home Audio space invites vendors to create an immersive experience on the perimeter of our Large Concept stores.

Displays are activated on either a **wall fixture** or a **full zone that contains a wall fixture and the surrounding 4’ x 4’ floor pad**.

Vendor Expectations

- For **wall activation**, contain all fixtures and signage within the space of 95.938”W x 112”H x 24”D.
- For **full zone activation**, contain all fixtures and signage within the space of the 8’W x 8’D floor pad.
- Ensure space and fixtures are ADA-compliant.
    - — GCA & IBC Code require aisles serving elements (“architectural components”) to be at least 48”W.

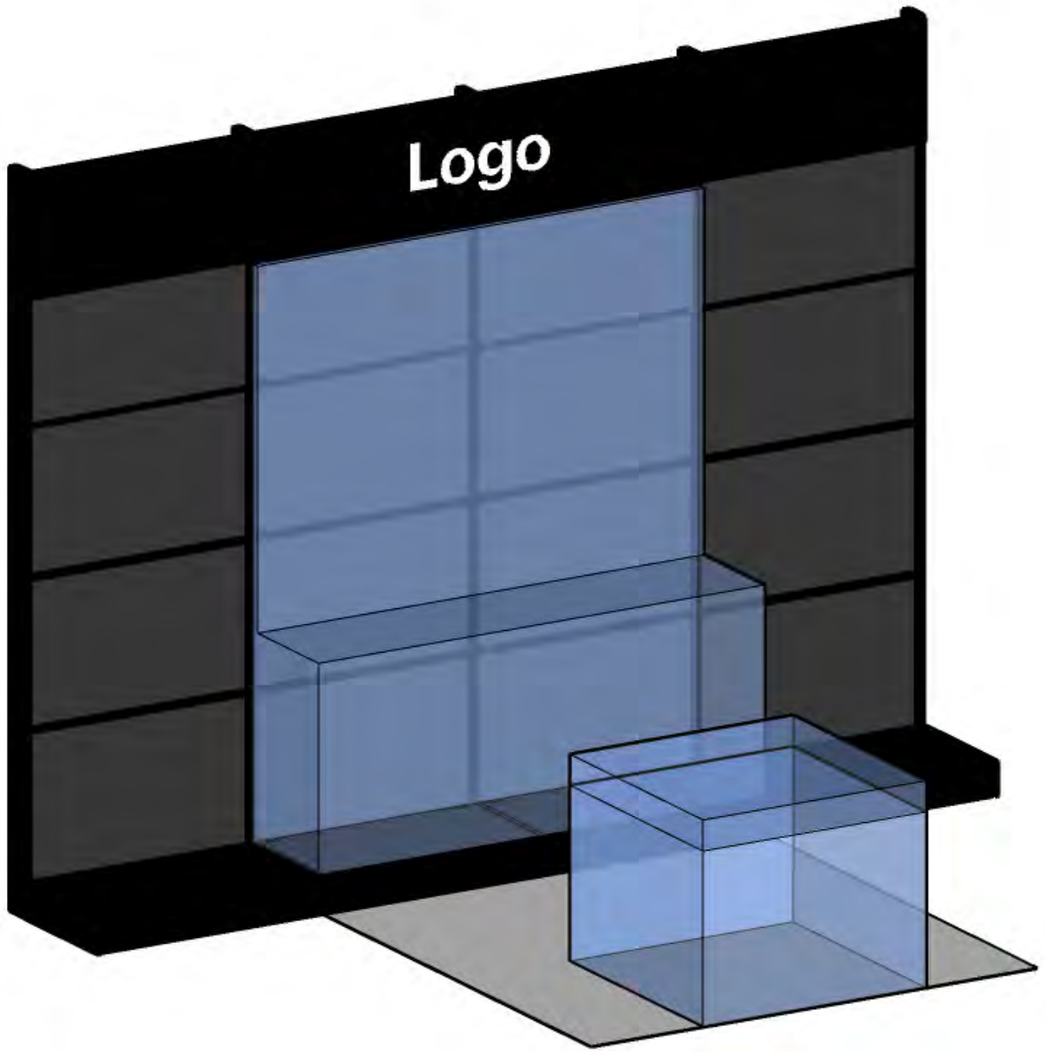

Last Updated August 12, 2026 8:20 AM | Best Buy partner and internal use only. Do not copy, publish, or distribute. The material in this document is confidential to Best Buy.

Dimensions: Wall Fixture Activation

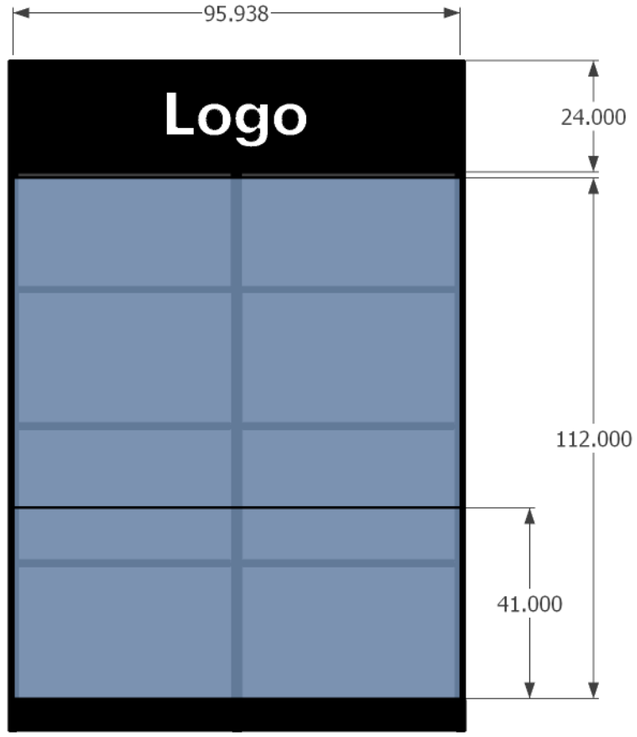

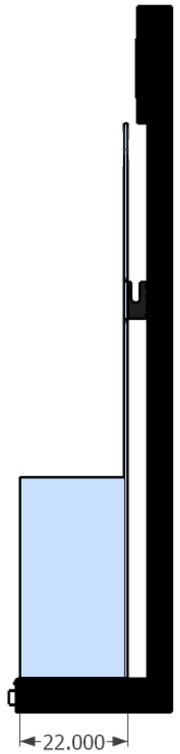

Last Updated August 12, 2026 8:20 AM | Best Buy partner and internal use only. Do not copy, publish, or distribute. The material in this document is confidential to Best Buy.

Dimensions: Full Zone Activation

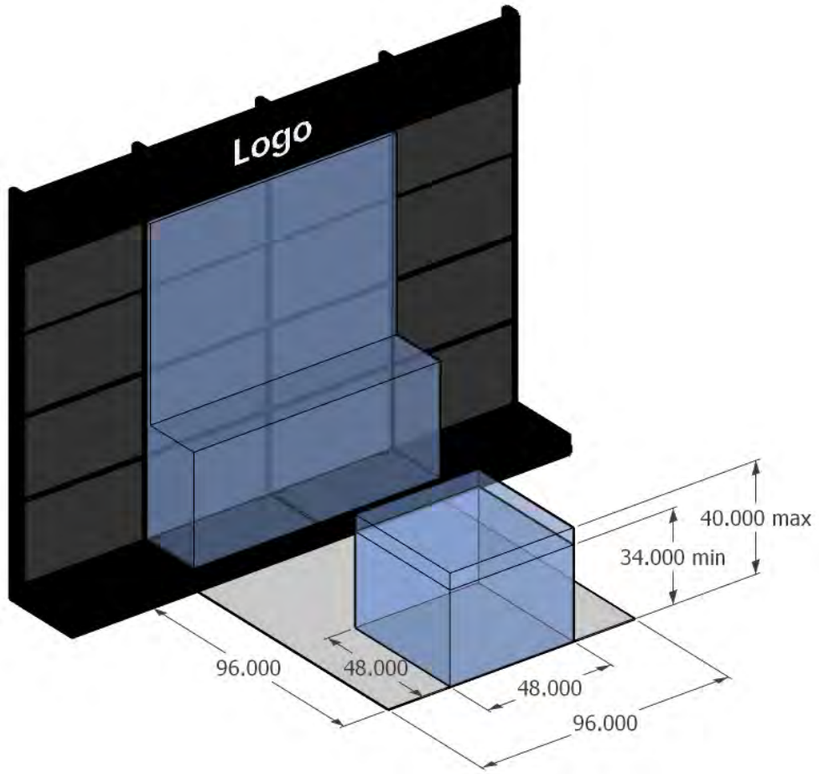

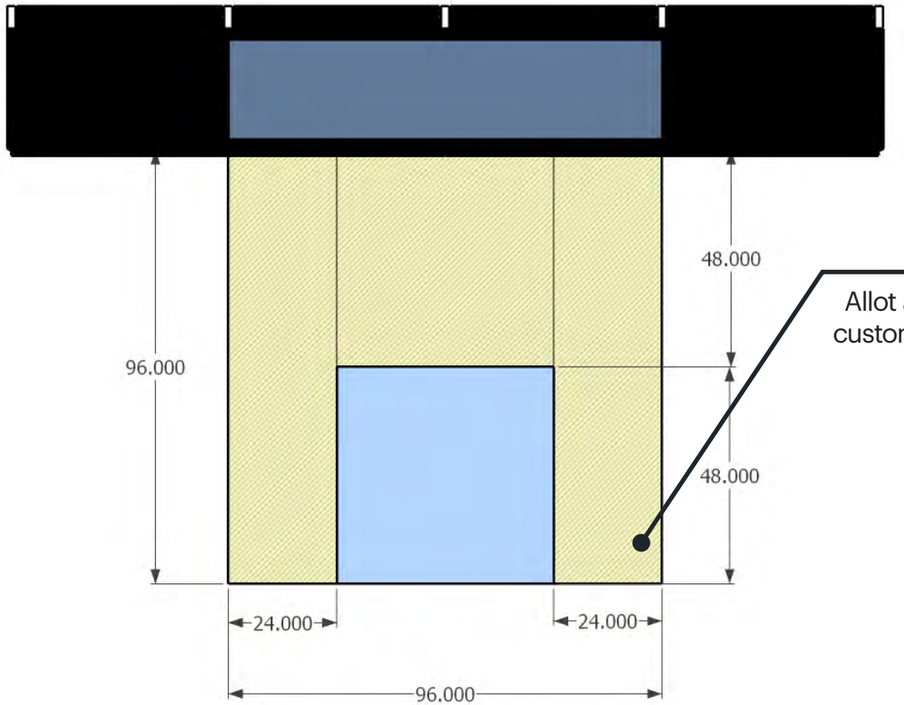

No Fly Zone

Allot adequate space for customers' pathways and adjacent vendors

Last Updated August 12, 2026 8:20 AM | Best Buy partner and internal use only. Do not copy, publish, or distribute. The material in this document is confidential to Best Buy.

Support and Anchoring

Vendor Expectations

- Secure the display wall and monitors using the required plasma bars (#1010755 or # 1001950). ***Note:*** *Uprights for plasma bars are 48” on center.*

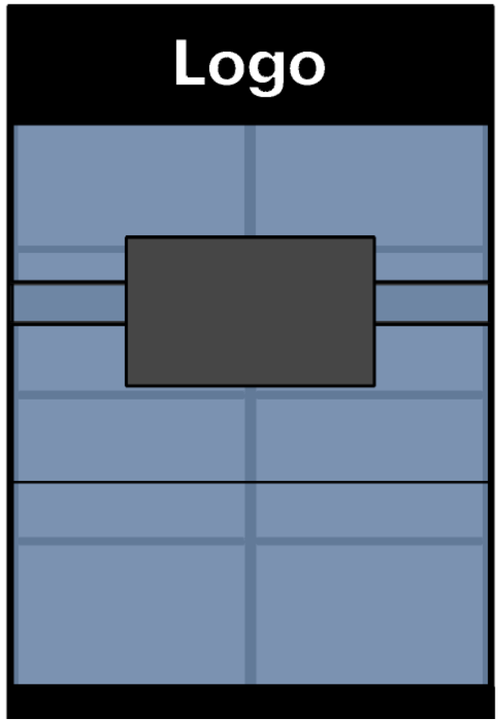

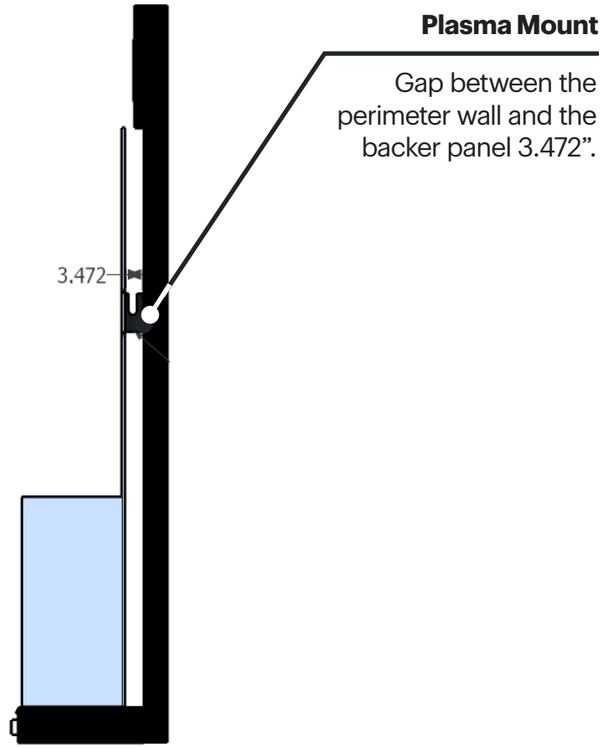

Last Updated August 12, 2026 8:20 AM | Best Buy partner and internal use only. Do not copy, publish, or distribute. The material in this document is confidential to Best Buy.

Power & Attachments

Vendor Expectations

- Use power, if desired, for any display attached to the wall. ***Note:*** *Freestanding fixtures on the floor space cannot be powered.*
- If powering displays, use power cords that are 15’ long.
- The lit logo within the perimeter header needs power supply part #1023615.
- Ensure the LED strip is centered in the perimeter header light panel. Refer to part #1013766 for details.
  - — Perimeter headers higher than 10’ have illuminated logos with a luminance range of 4000 to 7000 LUX.

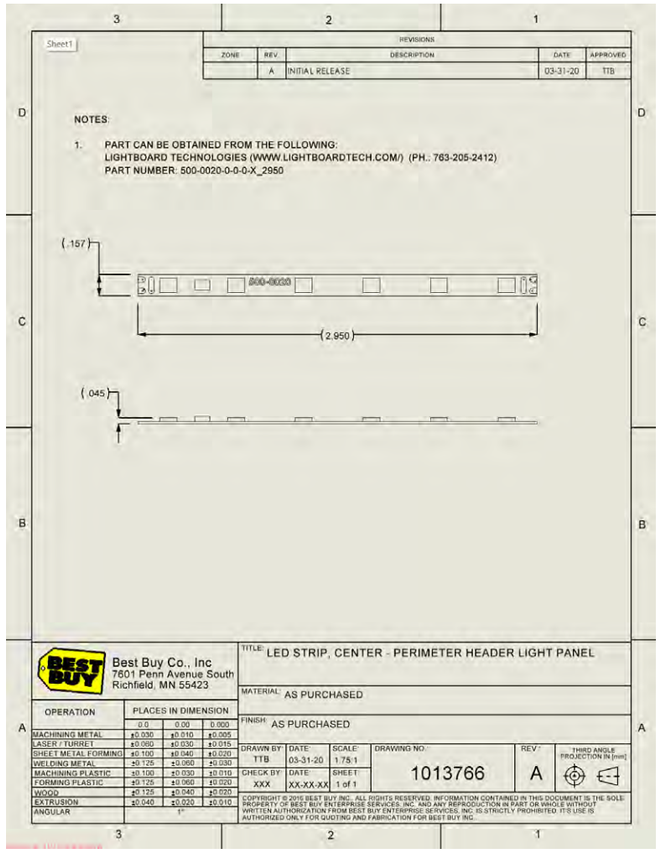

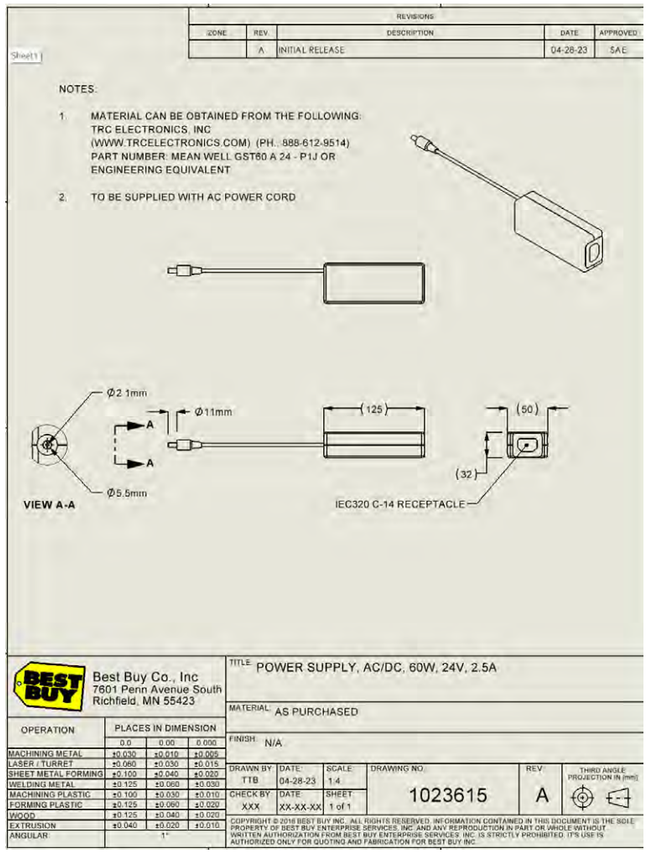

Last Updated August 12, 2026 8:20 AM | Best Buy partner and internal use only. Do not copy, publish, or distribute. The material in this document is confidential to Best Buy.

Graphics

Vendor Expectations

- Include a 24”H logo header to match existing Best Buy headers. Header must hang on merchandising bars attached to uprights.
- Reference EPDM #1021616 for overall construction and finish specifications.

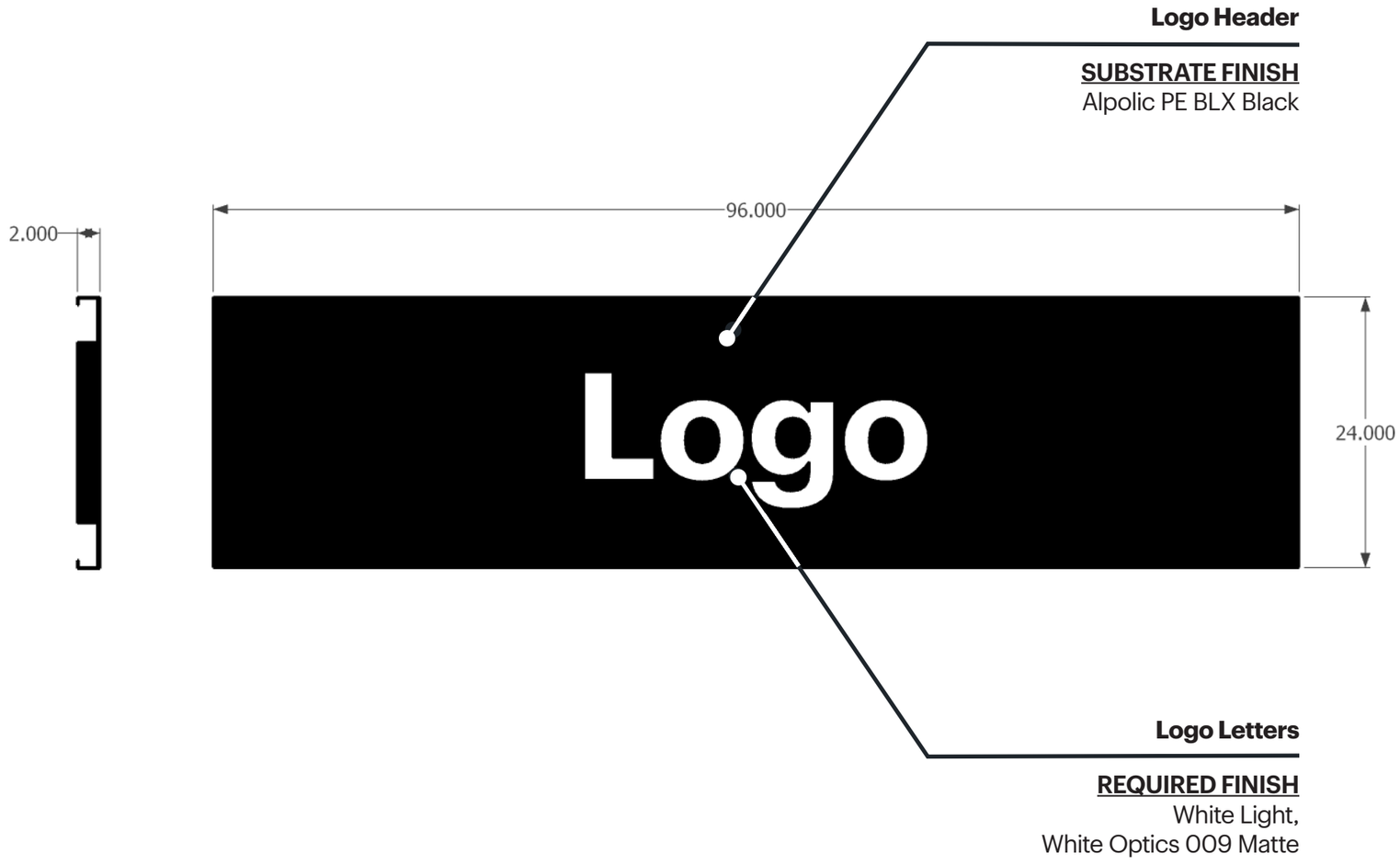

Last Updated August 12, 2026 8:20 AM | Best Buy partner and internal use only. Do not copy, publish, or distribute. The material in this document is confidential to Best Buy.

Graphics

Vendor Expectations

- Ensure backer panels are neutral in color and texture, and approved by Best Buy.
- Use SEG as the preferred substrate for large format graphics.
- Choose an image with Best Buy's priorities in mind:

  Priority one: Lifestyle imagery of humans and products in an environment.

  Priority two: Lifestyle imagery of products in an environment.

  Priority three: Product imagery on a neutral color field.

Note: *Basedeck covers and vertical signage are not permitted.*

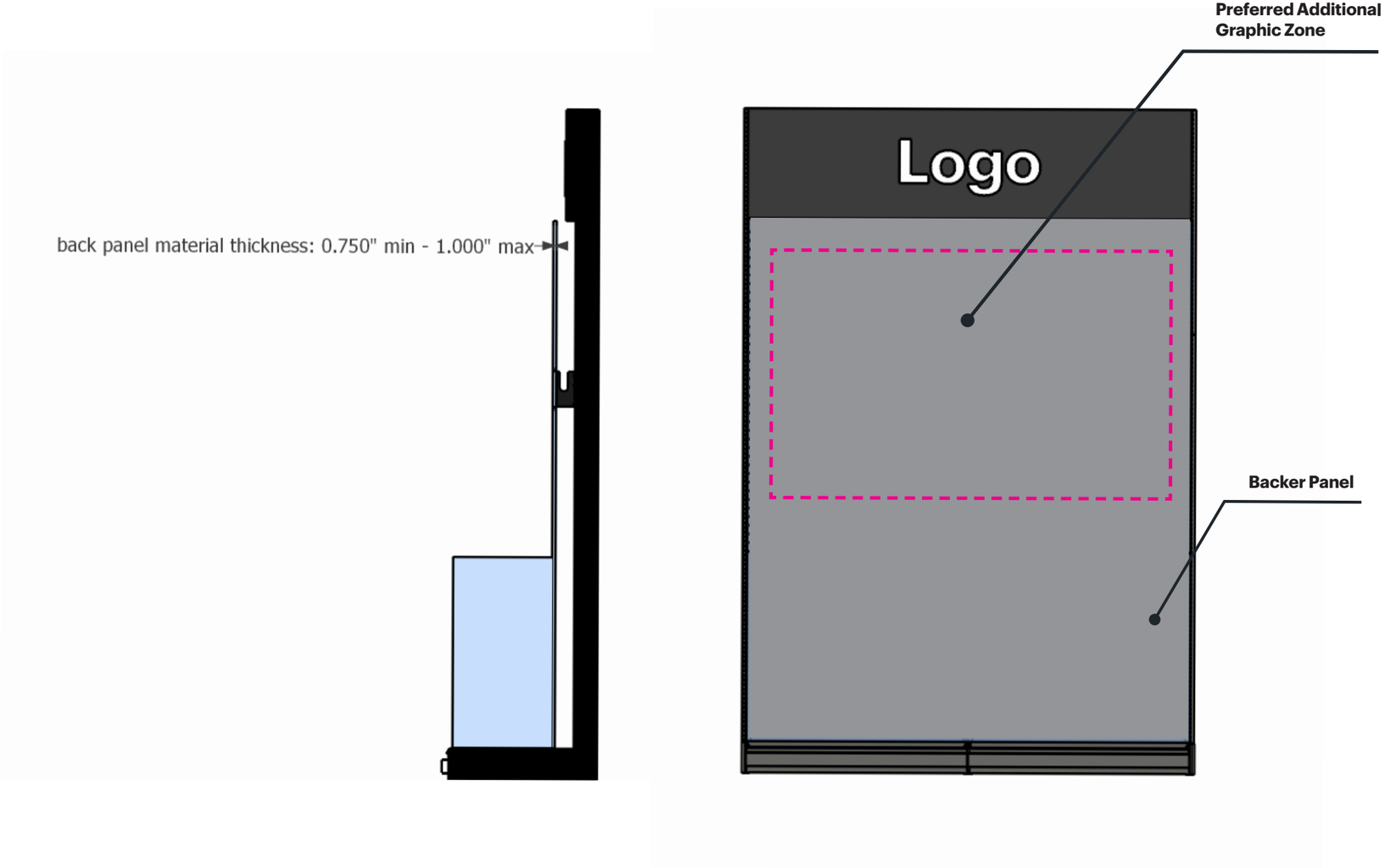

Last Updated August 12, 2026 8:20 AM | Best Buy partner and internal use only. Do not copy, publish, or distribute. The material in this document is confidential to Best Buy.

Merchandising

Vendor Expectations

- For **full zone activation**, contain all fixtures and signage within the 4’W x 4’D floor space.
  - — Design island fixture with maximum dimensions of 48”W x 48”H x 48”D.
  - — Maintain at least 4’ of clearance between wall display and fixture.
  - — Ensure all fixture components are ADA-compliant.
- For **wall activation**, contain all fixtures and signage within the space of 95.938”W x 112”H x 24”D.



Note: *There are no flooring changes/transitions that separate the space.*

Last Updated August 12, 2026 8:20 AM | Best Buy partner and internal use only. Do not copy, publish, or distribute. The material in this document is confidential to Best Buy.

Merchandising

Vendor Expectations

- Keep display within allotted height, width and depth.
- Prioritize TV(s) and soundbar(s) over graphics or other product categories.
- Ensure all interactive elements, including buttons and touch components, meet ADA requirements.
- Ensure all electronics are reviewed by the Technology Design Lab (see Technology Design Standards below).
- Use permitted forms of lighting only. Lit logos in headers and illumination from display products and monitors are permitted. No backlighting, downlighting, lit platforms, shelf lighting or under-cabinet lighting is permitted.
- Support all products, display or salable, with a proximally located electronic shelf label (ESL).
- Contain any display fixtures or small furniture pieces within the 4’ x 4’ floor space, ensuring they help connect the wall and floor program.
- Attach any additional fixture pieces securely to the wall or base deck.

You will need details and dimensions in these guides on Partner Portal:

ESL Pricing

Technology Design Standards

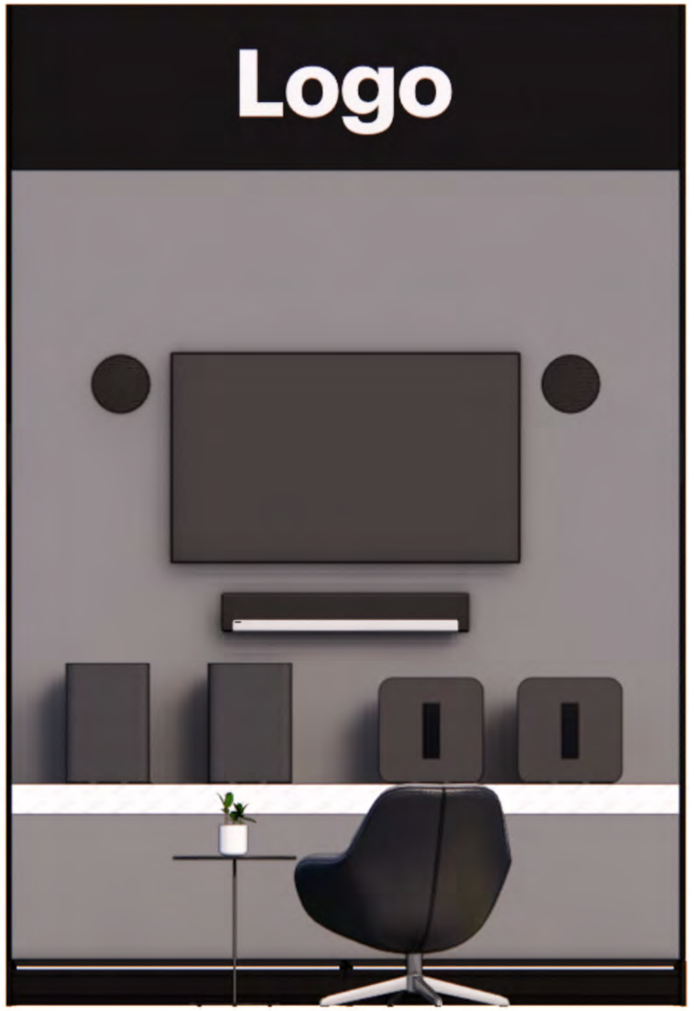

Last Updated August 12, 2026 8:20 AM | Best Buy partner and internal use only. Do not copy, publish, or distribute. The material in this document is confidential to Best Buy.

Next Steps

1 READ

the following from Partner Portal for details and dimensions **you will need**:

ESL Pricing **Technology Design Standards**

2 REQUEST

from your Best Buy contact:

- Drawings and models of parts you want to order. Provide the part numbers and specify Solidworks or STEP file type. **Best Buy provides Perimeter Racking*
- A list of preferred vendors who can manufacture the fixture parts.
- Examples of Best Buy-provided graphics, if desired.

Last Updated August 12, 2026 8:20 AM | Best Buy partner and internal use only. Do not copy, publish, or distribute. The material in this document is confidential to Best Buy.

Prepaid Mobile

Overview

The prepaid mobile wedge fixture enables multiple vendors to present their offers and branding clearly and confidently while still allowing customers to differentiate and compare shops easily across the category.

Vendors will activate three graphic components on the wedge fixture:

- Backer Graphic
- Promo Temp Sign
- Lower Wedge Graphic

Vendor Expectations

- Ensure graphics adhere to the appropriate template and meet all requirements for copy, design, substrate, etc.

**Drawings and graphic templates available upon request.*

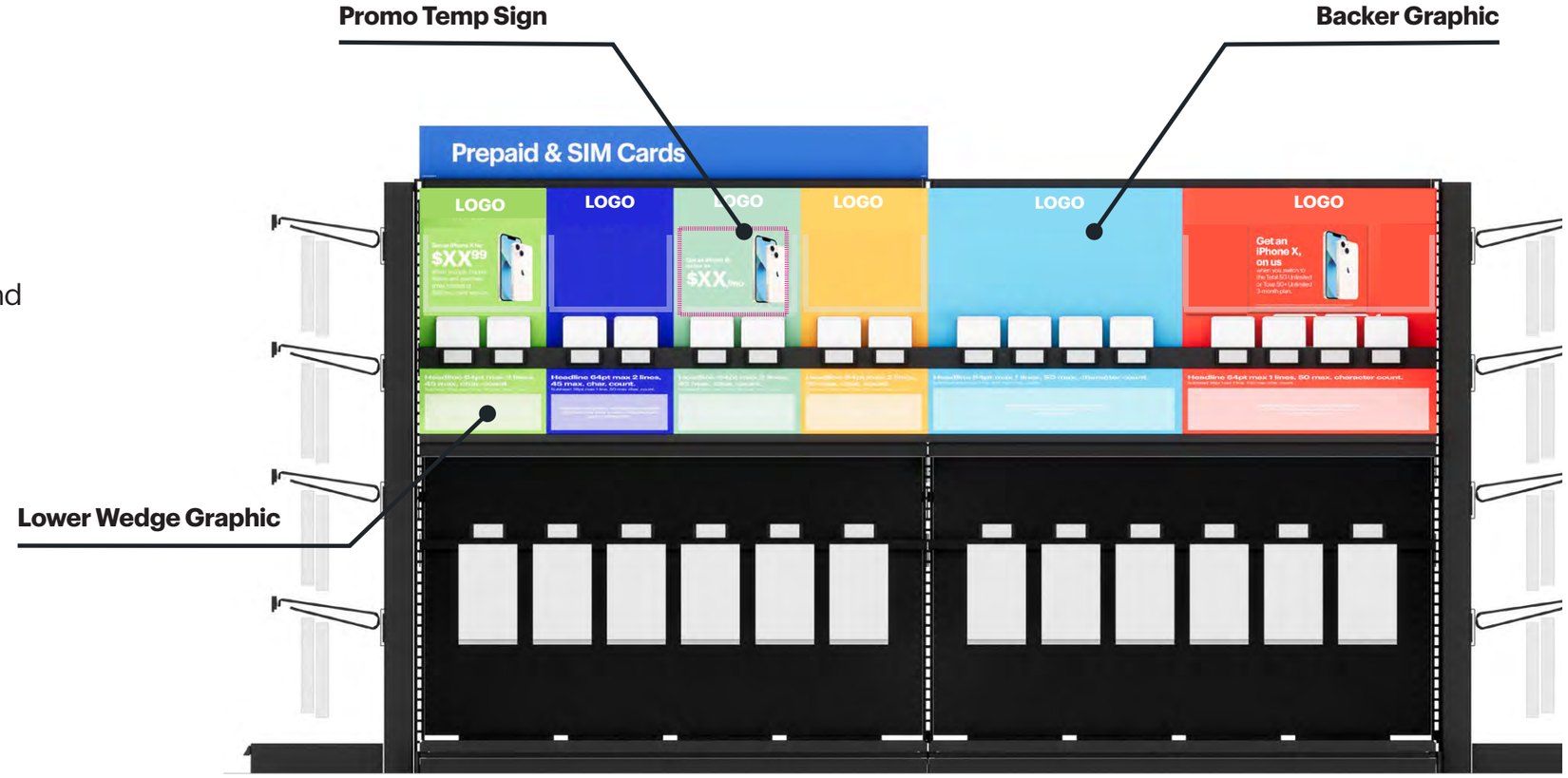

You will need details and dimensions in these guides on Partner Portal:

Copy & Claims Guidelines

QR Code Guidelines

Last Updated August 12, 2026 8:20 AM | Best Buy partner and internal use only. Do not copy, publish, or distribute. The material in this document is confidential to Best Buy.

Fixture Dimensions:
Best Buy-managed

Part Number 1025329

- Card holders and ESL pricing channels ship as separate pieces and need to be installed on site.
  - When not in use, extra parts can be placed in the fixture cavity.

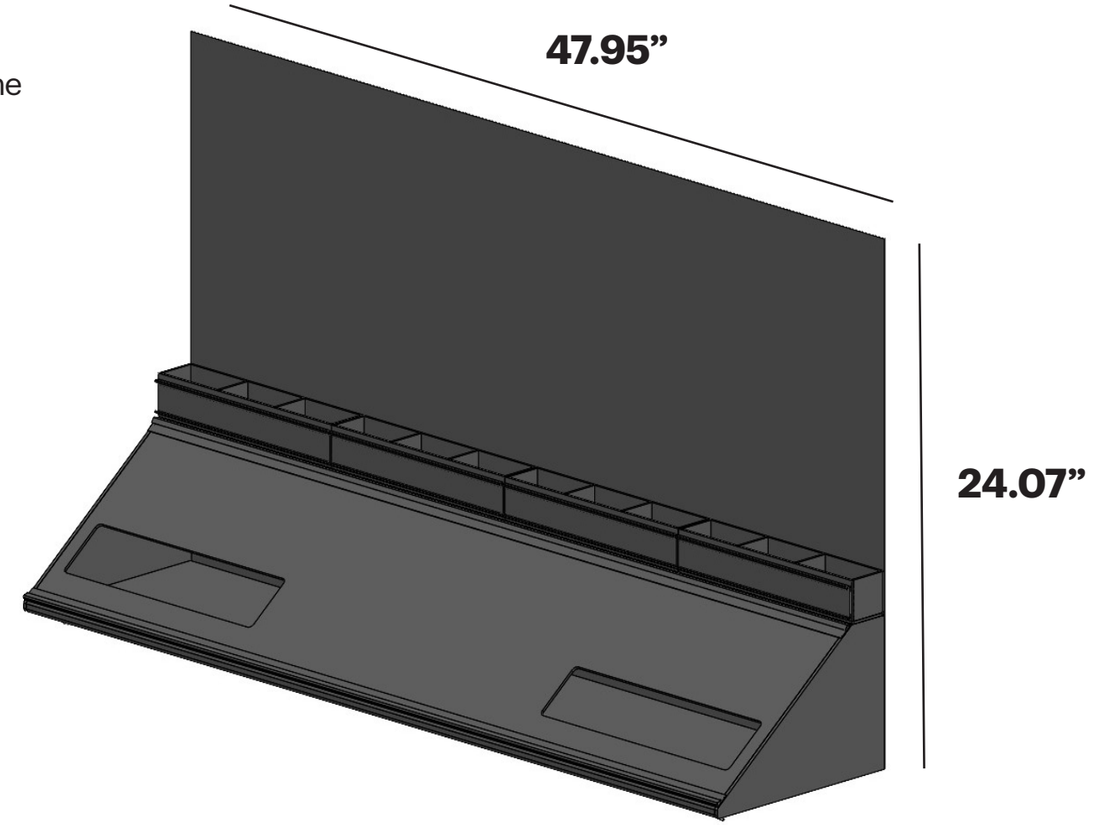

Last Updated August 12, 2026 8:20 AM | Best Buy partner and internal use only. Do not copy, publish, or distribute. The material in this document is confidential to Best Buy.

Backer Graphic:
Vendor-managed

Backer graphics exist in two sizes. They must include a flood of a single brand color and an all-white vendor logo. Vendors may print additional content (such as a subhead, concise body copy, or a QR code and accompanying CTA) on the backer graphic **if** no promo or temp signage will activate.

J-channels can be added onto backers to receive Promo Temp Signs. Backer graphics attach to wedge fixtures with magnets. See full finishing notes within templates for details.

One-Foot Backer Graphic
Prepaid_Mobile_Backer_Template_11.98x14.97.pdf
Size: 11.98”W x 14.97”H
Substrate: 3mm Sintra, White

Two-Foot Backer Graphic
Prepaid_Mobile_Backer_Template_11.98x14.97.pdf
Size: 23.968”W x 14.97”H
Substrate: 3mm Sintra, White

Vendor Expectations
- Ensure graphics adhere to the template and meet all requirements for copy, design, substrate, etc.
  Note: *You may organize information as you see fit within the designated area.*



Last Updated August 12, 2026 8:20 AM | Best Buy partner and internal use only. Do not copy, publish, or distribute. The material in this document is confidential to Best Buy.

Promo Temp Sign:
Vendor-managed

One-Foot Promo Temp Sign
Prepaid_Mobile_Promo_1_Template_11x8.5.pdf
Size: 11”W x 8.5”H
Substrate: 12pt C1S, White

Two-Foot Promo Temp Sign
Prepaid_Mobile_Promo_2_Template_22x8.5.pdf
Size: 22”W x 8.5”H
Substrate: 12pt C1S, White

Vendor Expectations
- Ensure graphics adhere to the template and meet all requirements for copy, design, substrate, etc.
- Attach graphics by sliding into the J-channels.

Example Only



Promo Temp Sign

+

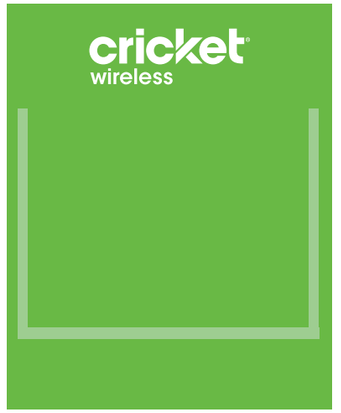

Backer Graphic

=

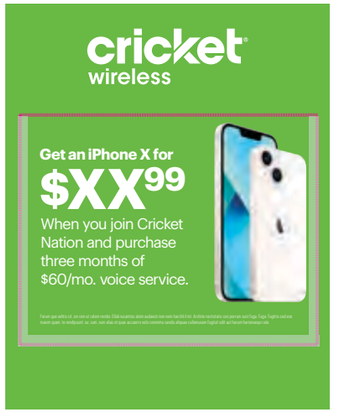

Last Updated August 12, 2026 8:20 AM | Best Buy partner and internal use only. Do not copy, publish, or distribute. The material in this document is confidential to Best Buy.

Lower Wedge Graphic:
Vendor-managed

One-Foot Lower Wedge Graphic
Prepaid_Mobile_Wedge_Template_11.98x10.9375.pdf
Size: 11.98”W x 10.9375”H
Substrate: 24pt C1S, White

Two-Foot Lower Wedge Graphic
Prepaid_Mobile_Wedge_Template_23.968x10.9375.pdf
Size: 23.968”W x 10.9375”H
Substrate: 24pt C1S, White

Vendor Expectations
- Ensure graphics adhere to the template and meet all requirements for copy, design, substrate, etc.
- Attach graphics by sliding into the J-channels.

Best Practice
- Utilize a cohesive color scheme that visually connects with all other collateral elements. Consider using a flood of color to unify the color story between the backer graphic and lower wedge graphic.

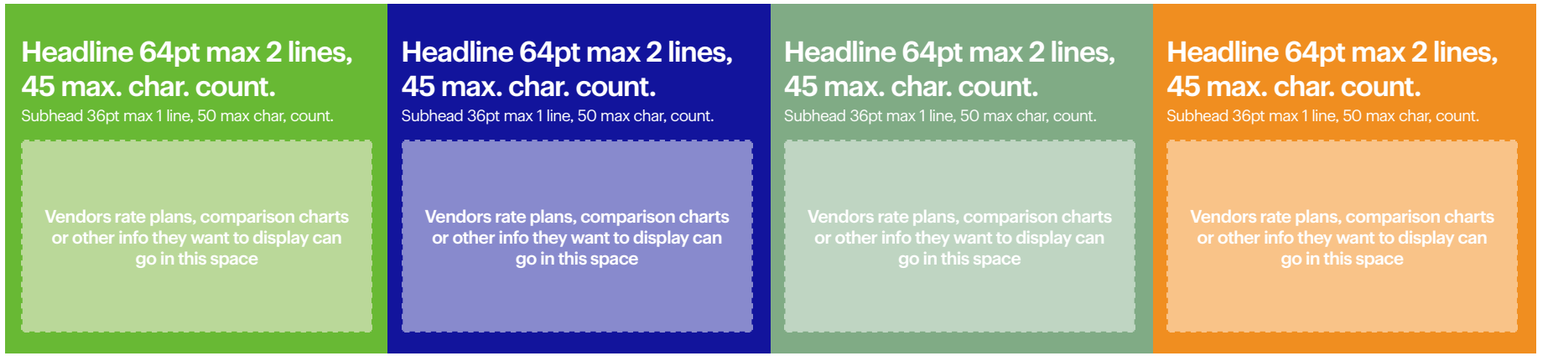

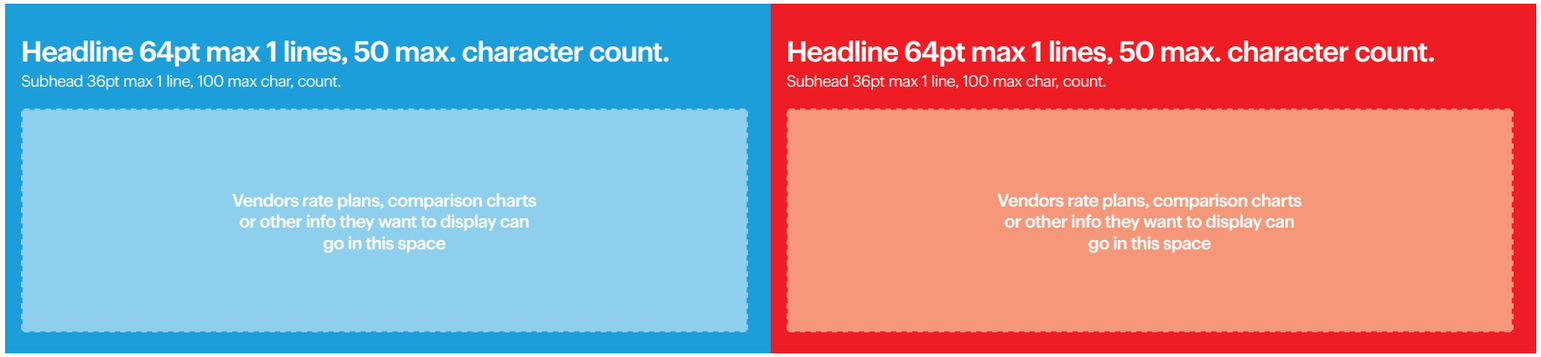

Last Updated August 12, 2026 8:20 AM | Best Buy partner and internal use only. Do not copy, publish, or distribute. The material in this document is confidential to Best Buy.

Merchandising

Vendor Expectations

- If you choose to merchandise cards, display them in our standard 1’W tray attachable at the bottom of the Backer Graphic. Each 1’W tray includes three compartments, and each compartment measures 3.83”W x 1.875”H x 2”D.
- Ensure product does not extend wider than fixture edges or obscure any copy within the display.
- Support all non-priced products with a proximally located peg label-sized Electronic Shelf Label (ESL) attached to the shelf rail.

Best Practices

- Ensure future strategies are in place to showcase your product and present an abundant display even if faced with dips in inventory.

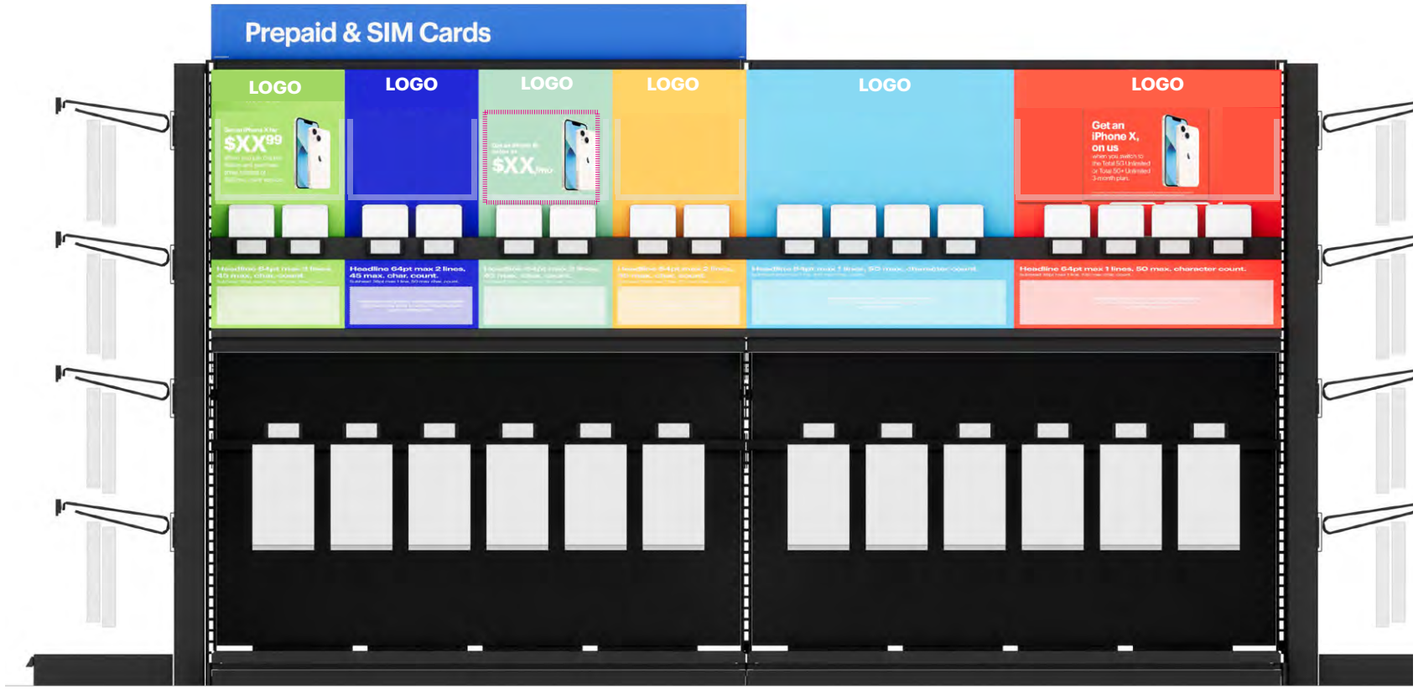

You will need details and dimensions in this guide on Partner Portal:

ESL Pricing

Last Updated August 12, 2026 8:20 AM | Best Buy partner and internal use only. Do not copy, publish, or distribute. The material in this document is confidential to Best Buy.

Product Tables

Guidelines – Overall dimensions

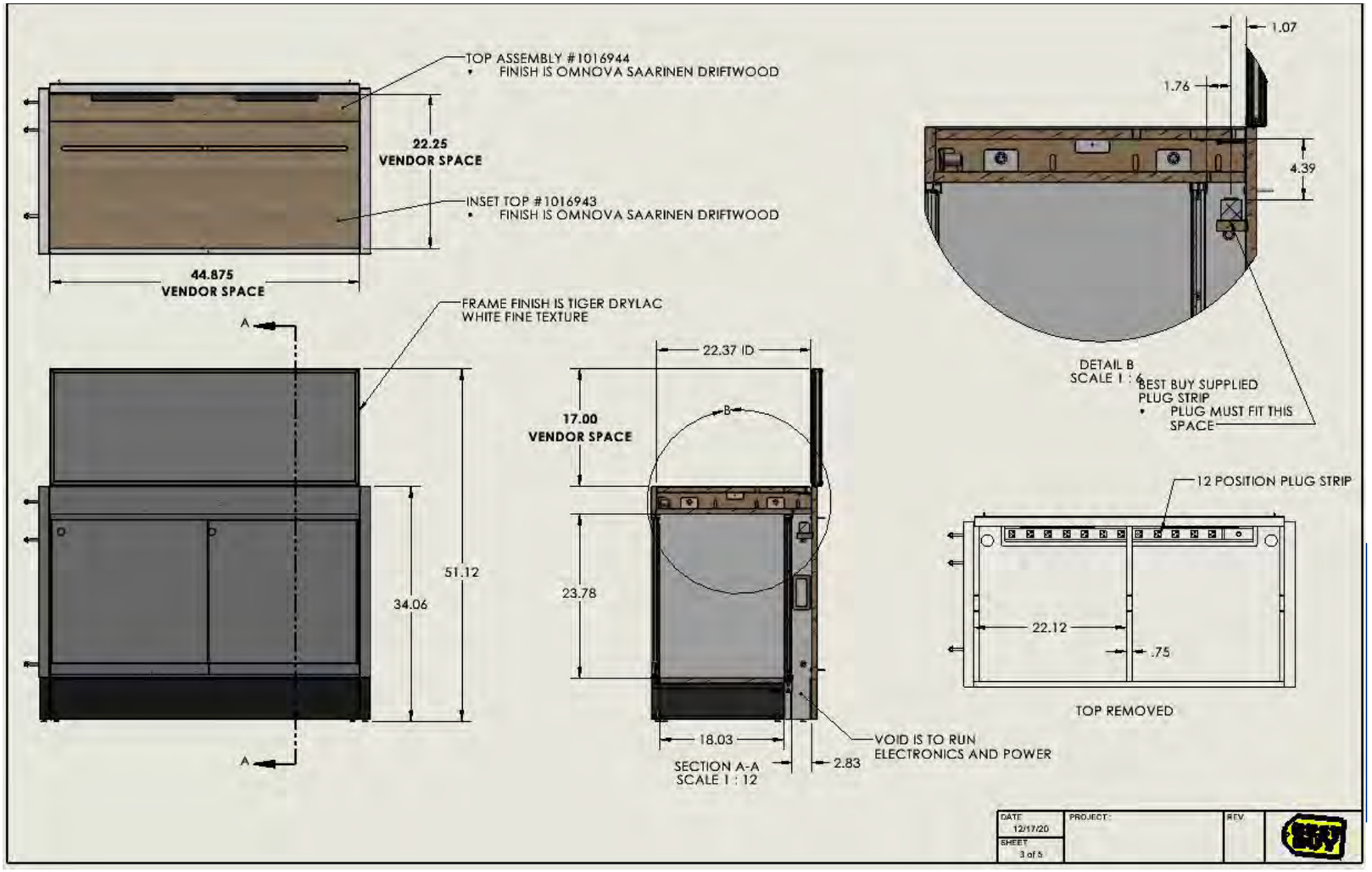

Last Updated August 12, 2026 8:20 AM | Best Buy partner and internal use only. Do not copy, publish, or distribute. The material in this document is confidential to Best Buy.

Guidelines – Graphic frame

Guidelines:

- Product tables, either lit or non-lit will use the same graphic frame

Non-lit graphics:

- Vendor supplies the graphic
- Graphic material to be 12pt C1S White
- Departments using non-lit graphics are Computing, PC Gaming

Lit graphics:

- Vendor supplies the graphic
- Graphic material to be .015 Translucent Styrene
- Departments using lit graphics are Wearables, Headphones and Cameras / DI

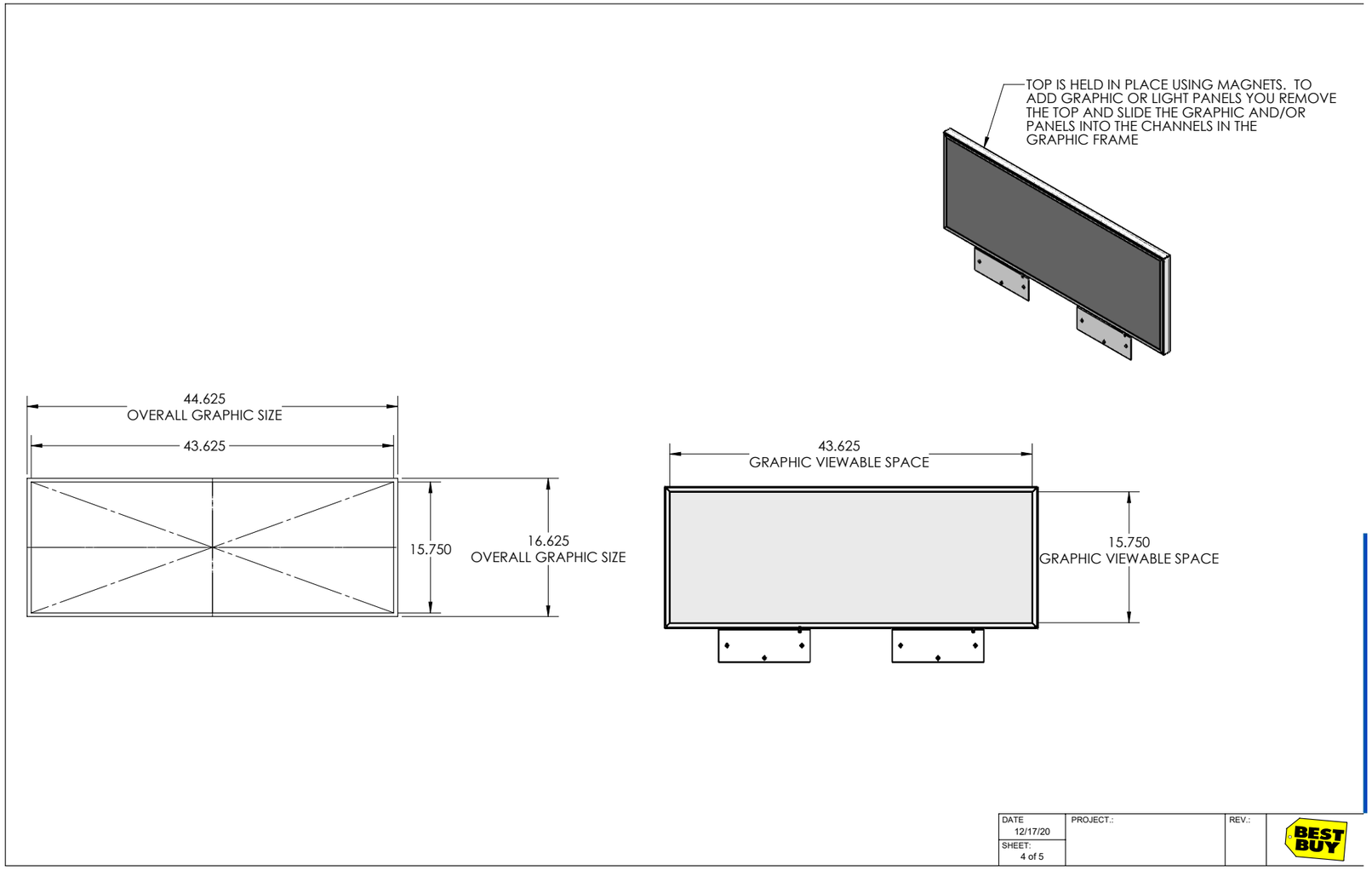

Last Updated August 12, 2026 8:20 AM | Best Buy partner and internal use only. Do not copy, publish, or distribute. The material in this document is confidential to Best Buy.

Guidelines – 4 foot display option 1

Guidelines:

- Vendor uses the existing tops, finish is Omnova Saarinen Driftwood.
- Products, product mounts or display must attach securely to the slot in the top.
- Must be able to access all electronics and the powerstrip without having to remove any product or display. Must be accessible without having to use tools.
- See page 4 (overall drawing) within this deck for the space that is allowed for the vendor display.
- Vendor uses the Best Buy-supplied graphic frame.
- Specifications for the graphics are included in this deck.
- Vendor display to not overhang the white border on the table top or extend above the graphic frame and to stay within the allowable space shown in this deck.
- If Best Buy is not supplying sliding doors, shelves or merch bars, you may produce them using the drawings provided.
- No undercabinet lighting on any of the sections.
- No framing to go on the outside of the cabinet.
- Designs must be approved by Best Buy before prototyping.
- All product displayed must have pricing. Reference the ESL guideline document.
- If buttons or interaction is required, they must follow ADA guidelines and the technology design standards.

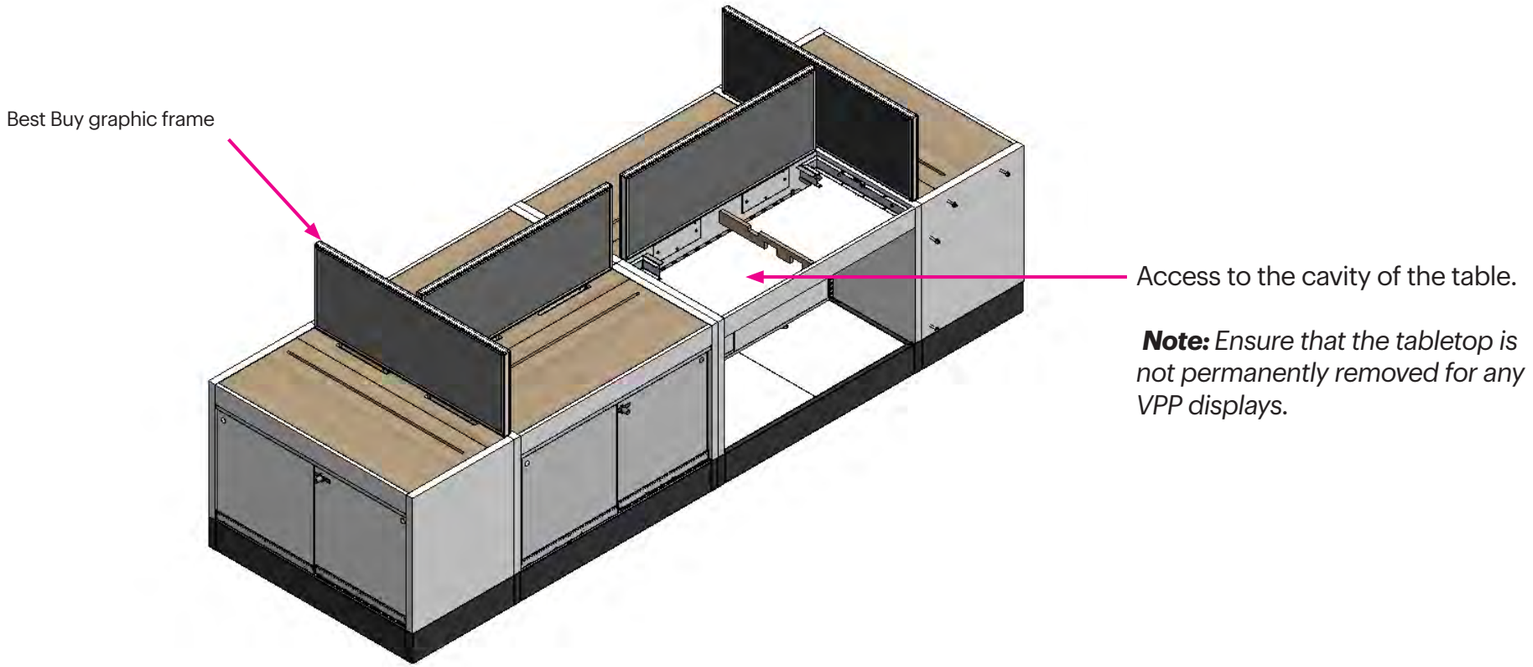

Note: *Ensure that the tabletop is not permanently removed for any VPP displays.*

Last Updated August 12, 2026 8:20 AM | Best Buy partner and internal use only. Do not copy, publish, or distribute. The material in this document is confidential to Best Buy.

Guidelines – 4 foot display option 2

Guidelines:

- Vendor removes the Best Buy-supplied tops and inserts tops with a finish of their choice or display insets into the table.
- Tops can raise above the top of the cabinet by 3/4" so edge of top is visible. Must be 3/4", no more or no less. Display or any items on the display must not go higher than the graphic frame.
- Tops must be edgebanded either in white or a match to the finish used.
- Reference part #1016943 and #1016944 for dimensions of the tops.
- Must be able to access all electronics and the powerstrip without having to remove any product or display. Must be accessible without having to use tools.
- See page 4 (overall drawing) within this deck for the space that is allowed for the vendor display.
- Vendor uses the Best Buy-supplied graphic frame.
- Specifications for the graphics are included in this deck.
- Vendor display to not overhang the white border on the table top or extend above the graphic frame and to stay within the allowable space shown in this deck.
- If Best Buy is not supplying sliding doors, shelves or merch bars, you may produce them using the drawings provided.
- No undercabinet lighting on any of the sections.
- No framing to go on the outside of the cabinet.
- Designs must be approved by Best Buy before prototyping.
- All product displayed must have pricing. Reference the ESL guideline document.
- If buttons or interaction is required, they must follow ADA guidelines and the technology design standards.

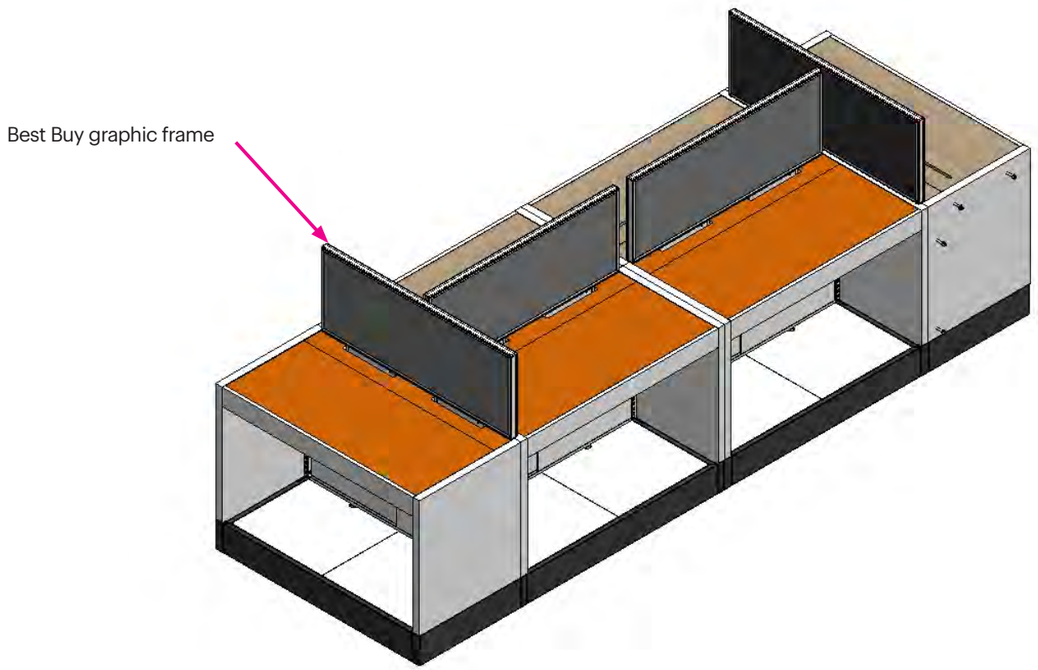

Last Updated August 12, 2026 8:20 AM | Best Buy partner and internal use only. Do not copy, publish, or distribute. The material in this document is confidential to Best Buy.

Guidelines – 4 foot display option 3

Guidelines:

- Vendor removes the Best Buy-supplied tops and inserts an L-shaped display.
- Tops can raise above the top of the cabinet by 3/4" so edge of top is visible. Must be 3/4", no more or no less. Display or any items on the display must not go higher than the graphic frame.
- Tops must be edgebanded either in white or a match to the finish used.
- Must be able to access all electronics and the powerstrip without having to remove any product or display. Must be accessible without having to use tools.
- Back panel can have a monitor and the monitor and electronics must get approved by the C7 lab at Best Buy. See the Best Buy technology standards.
- If it is in a department requiring non-lit graphics, the graphics cannot be lit. If it is in a department that requires lit graphics, the back panel must be lit to keep a consistent look.
- If the display is in a department that uses lit graphics, you may choose how to light your graphics (e.g., fabric, full monitor, duratrans)
- Vendor display to not overhang the white border on the table top or extend above the graphic frame and to stay within the allowable space shown in this deck.
- If Best Buy is not supplying sliding doors, shelves or merch bars, you may produce them using the drawings provided.
- No undercabinet lighting on any of the sections.
- No framing to go on the outside of the cabinet.
- Designs must be approved by Best Buy before prototyping.
- All product displayed must have pricing. Reference the ESL guideline document.
- If buttons or interaction is required, they must follow ADA guidelines and the technology design standards.

Best Buy graphic frame
- Graphic frames will not get removed
- Vendors back panel will cover the front of the frame
- Back side of the vendors back panel must be white

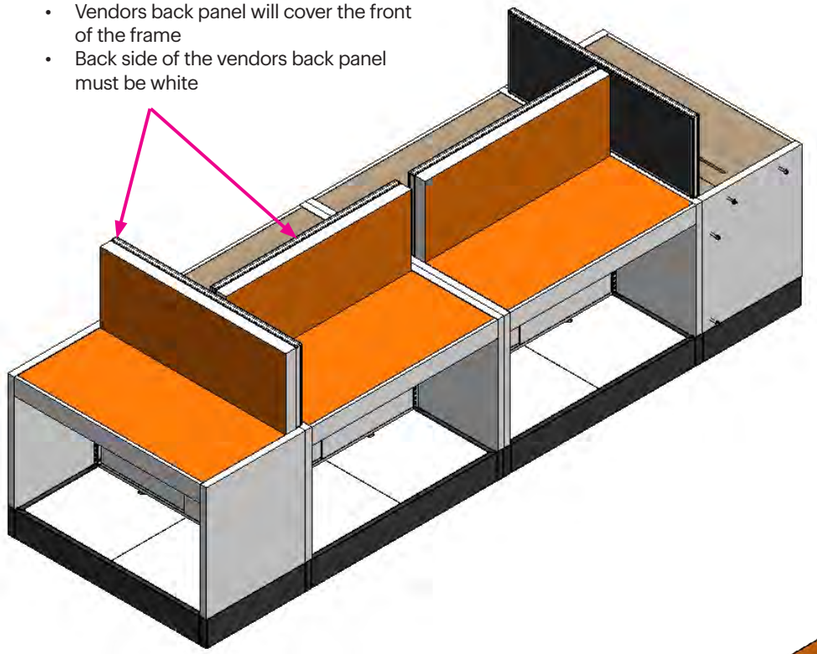

Top and vertical sides to match the finish of the Best Buy-supplied frames
- Finish is Tiger Drylac White Fine Texture 049-13150

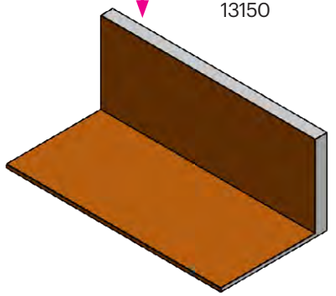

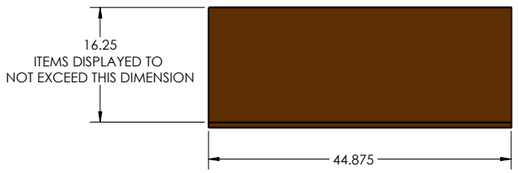

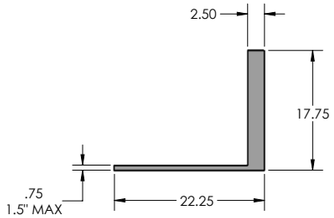

Last Updated August 12, 2026 8:20 AM | Best Buy partner and internal use only. Do not copy, publish, or distribute. The material in this document is confidential to Best Buy.

Guidelines – 8 foot display option

Guidelines:

- Vendor removes the Best Buy-supplied tops and inserts an L-shaped display.
- Tops can raise above the top of the cabinet by 3/4" so edge of top is visible. Must be 3/4", no more or no less. Display or any items on the display must not go higher than the graphic frame.
- Tops must be edgebanded either in white or a match to the finish used.
- Must be able to access all electronics and the powerstrip without having to remove any product or display. Must be accessible without having to use tools.
- Back panel can have a monitor and the monitor and electronics must get approved by the C7 lab at Best Buy. See the Best Buy technology standards.
- If it is in a department requiring non-lit graphics, the graphics cannot be lit. If it is in a department that requires lit graphics, the back panel must be lit to keep a consistent look.
- If the display is in a department that uses lit graphics, you may choose how to light your graphics (e.g., fabric, full monitor, duratrans)
- Vendor display to not overhang the white border on the table top or extend above the graphic frame and to stay within the allowable space shown in this deck.
- If Best Buy is not supplying sliding doors, shelves or merch bars, you may produce them using the drawings provided.
- No undercabinet lighting on any of the sections.
- No framing to go on the outside of the cabinet.
- Designs must be approved by Best Buy before prototyping.
- All product displayed must have pricing. Reference the ESL guideline document.
- If buttons or interaction is required, they must follow ADA guidelines and the technology design standards.

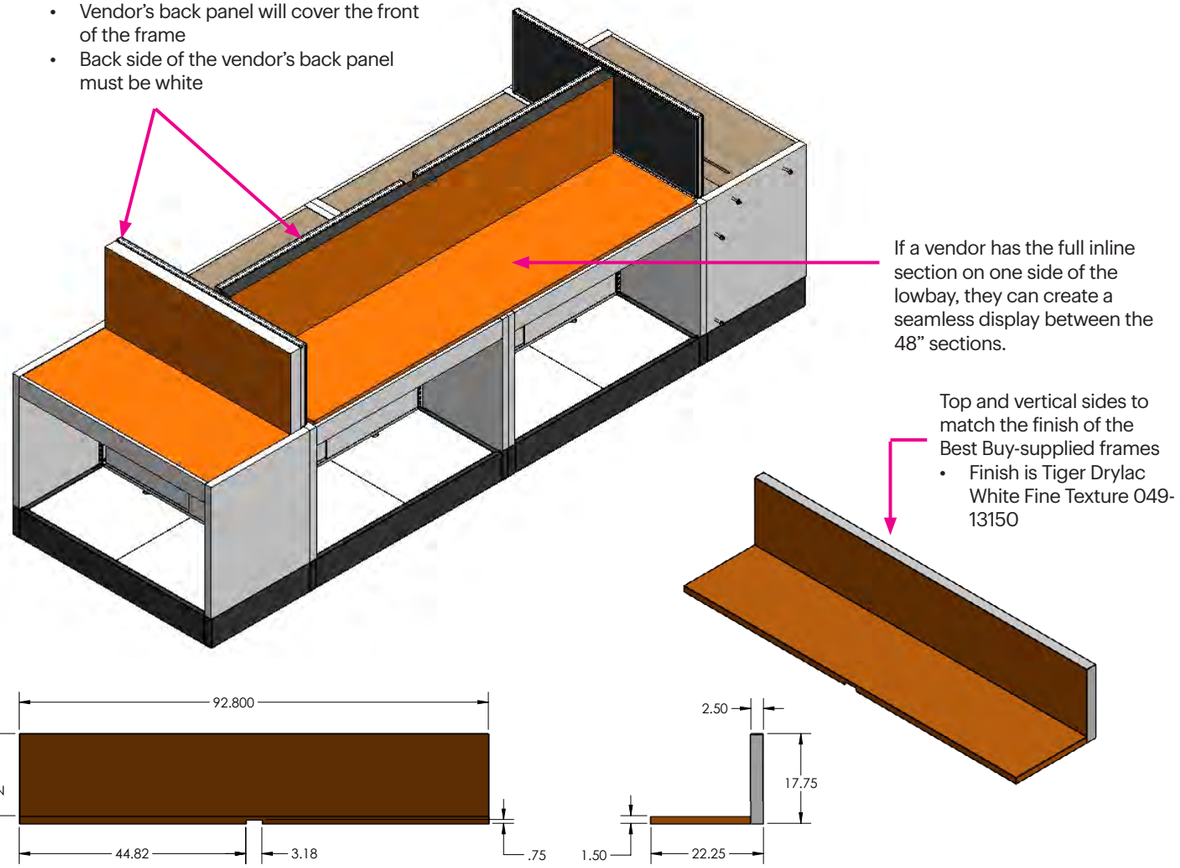

Last Updated August 12, 2026 8:20 AM | Best Buy partner and internal use only. Do not copy, publish, or distribute. The material in this document is confidential to Best Buy.

Guidelines – 2 foot display option

Guidelines:

- Vendor removes the Best Buy-supplied tops and inserts an L-shaped display.
- Top of vendor display must be flush with the top of the table
- Tops must be edgebanded either in white or a match to the finish used.
- Must be able to access all electronics and the powerstrip without having to remove any product or display. Must be accessible without having to use tools.
- Back panel can have a monitor. Monitor and electronics must get approved by the C7 lab at Best Buy. See the Best Buy technology standards.
- If it is in a department requiring non-lit graphics, the graphics cannot be lit. If it is in a department that requires lit graphics, the back panel must be lit to keep a consistent look.
- If the display is in a department that uses lit graphics, you may choose how to light your graphics (e.g., fabric, full monitor, duratrans)
- Vendor display can not overhang the white border on the table top or extend above the graphic frame and must stay within the allowable space shown in this deck.
- No undercabinet lighting on any of the sections.
- No framing to go on the outside of the cabinet.
- Designs must be approved by Best Buy before prototyping.
- All product displayed must have pricing. Must be designed to use ESL pricing.
- If buttons or interaction is required, they must follow ADA guidelines and the technology design standards.

Best Buy graphic frame

- Graphic frames will not get removed
- Vendors back panel will cover the front of the frame
- Back side of the vendors back panel must be white

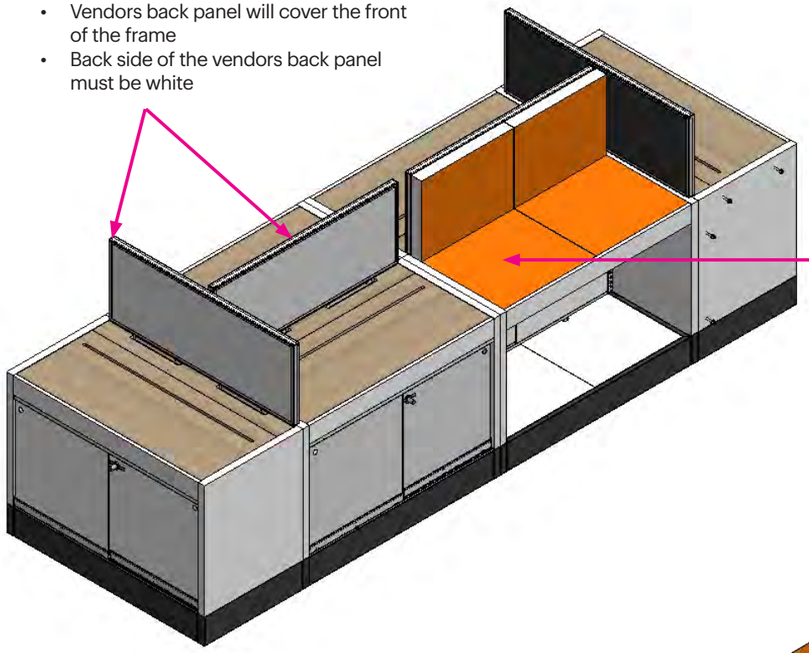

2 foot display is needed when a vendor has half of the table to display their product. This is the only option for a 2 foot display

Top and vertical sides to match the finish of the Best Buy-supplied frames

- Finish is Tiger Drylac White Fine Texture 049-13150

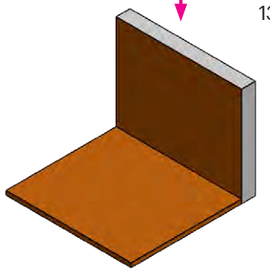

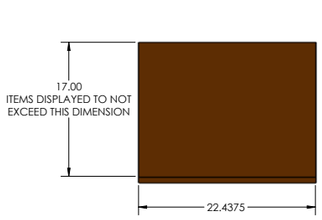

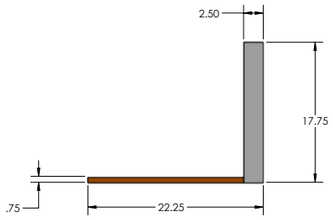

Last Updated August 12, 2026 8:20 AM | Best Buy partner and internal use only. Do not copy, publish, or distribute. The material in this document is confidential to Best Buy.

Guidelines – Tables with focal frame

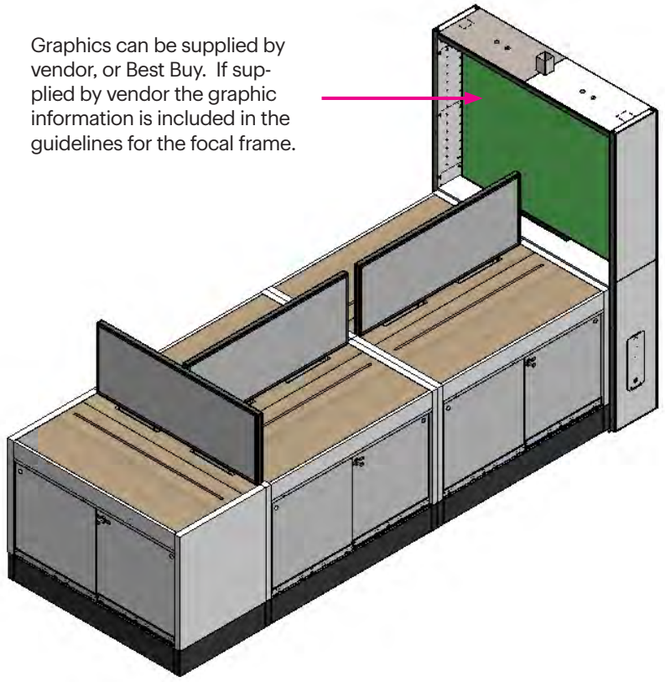

Tables with focal and graphics on all sections
- Can use vendor options 1, 2 and 3 for the endcap table
- Can use vendor options 1, 2, 3 and 4 for the inline tables

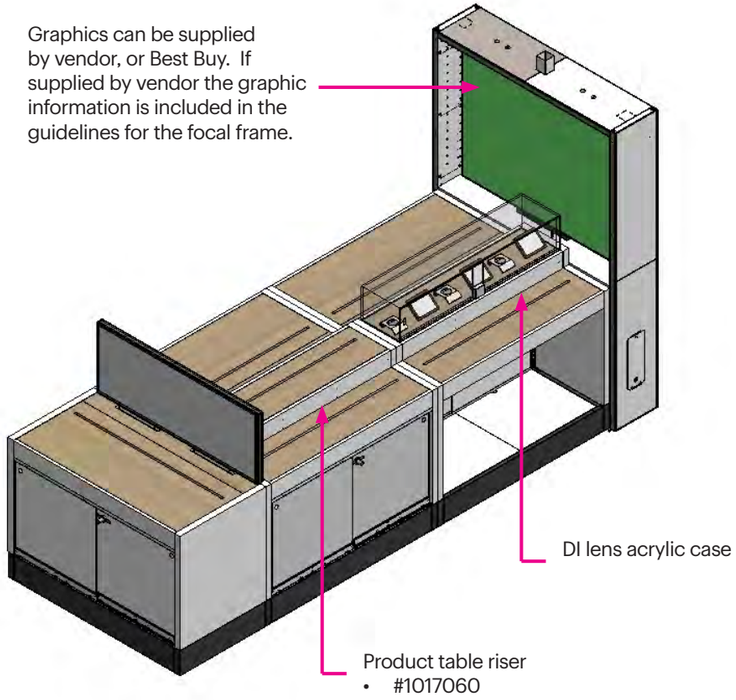

Tables with focal and graphic only on the endcap
- Can use vendor options 1, 2 and 3 for the endcap table
- Can use vendor options 1 and 2 for inline tables

Last Updated August 12, 2026 8:20 AM | Best Buy partner and internal use only. Do not copy, publish, or distribute. The material in this document is confidential to Best Buy.

Guidelines – Single table with focal frame

Graphics can be supplied by vendor, or Best Buy. If supplied by vendor the graphic information is included in the guidelines for the focal frame.

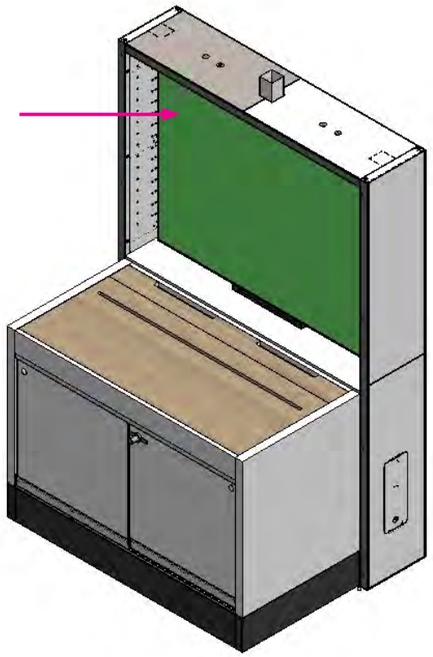

Single table with focal frame
- Can use vendor options 1 and 2 for the table

Last Updated August 12, 2026 8:20 AM | Best Buy partner and internal use only. Do not copy, publish, or distribute. The material in this document is confidential to Best Buy.

QR Codes

Digital

The only QR codes permitted on vendor presentations are those located on product ESLs. These direct to product details, inventory and fulfillment options.

Exceptions *may be possible* with pre-approval from Best Buy's Store Experience team.

Vendor Expectations

- If granted an exception, include only **one** QR code (in addition to ESL QR codes) per four linear feet of your vendor presentation.
- Ensure your QR code links to BestBuy.com or a closed microsite created only for Best Buy and offers useful, specialized content that's beneficial to the customer (i.e. videos, product specs, bundle opportunities, etc.).

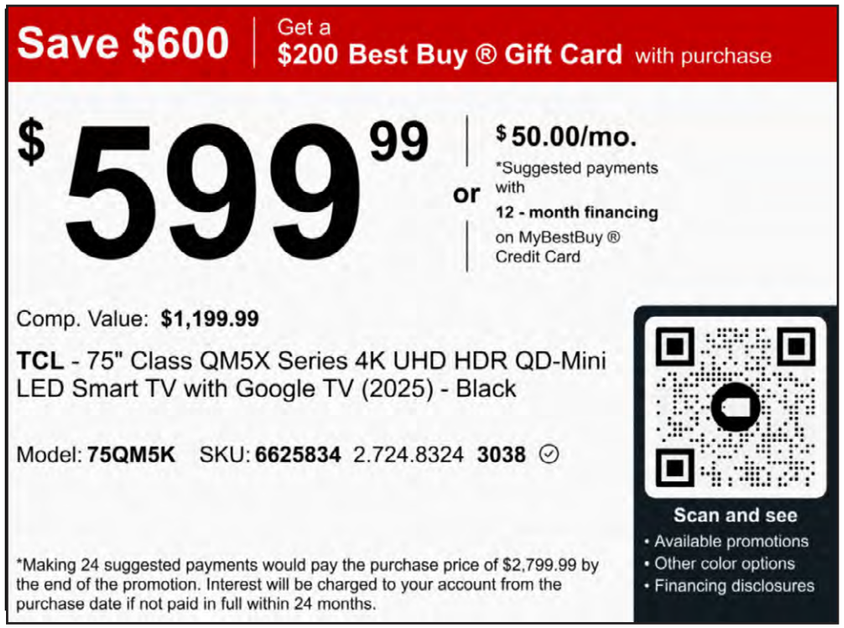

Fact Tag ESL and Inset



Peg Label ESL

Last Updated August 12, 2026 8:20 AM | Best Buy partner and internal use only. Do not copy, publish, or distribute. The material in this document is confidential to Best Buy.

Print

Vendor Expectations

- Show printed QR codes in 100% black and white. No colors or shades are permitted.
- Place your code on a white square that is 20% larger than the code if its background is not already white.
- Ensure your code consists only of rectilinear/square forms. No words, shapes or artwork are permitted.
- Accompany your code by a call to action that is legible (8pt or larger) and tells the customer what they'll experience by scanning. See examples at right.



Scan for product sizing video.



Scan to see discount bundles.

Last Updated August 12, 2026 8:20 AM | Best Buy partner and internal use only. Do not copy, publish, or distribute. The material in this document is confidential to Best Buy.

Shelf Dimensions & Perf Patterns

BEST BUY SHELF DETAILS			MERCHANDISING AREA	
SHELF COMMON NAME	EPDM NUMBERS	FINISH	W (INCHES)	D (INCHES)
10.5" X 48"	1016891	BLACK	47.7	10.4
10.5" X 24"	1017727	BLACK	23.7	10.4
12" X 48"	1014797	BLACK	47.7	11.9
	1016889	WHITE		
12" X 24"	1017788	BLACK	23.7	11.9
	1022211	WHITE		
14" X 48"	1012248	BLACK	47.7	13.7
	1021561	WHITE		
	1008678	SILVER		
14" X 24"	1012247	BLACK	23.7	13.7
	1008677	SILVER		
18" X 48"	1012249	BLACK	47.7	17.7
	1021562	WHITE		
	1008683	SILVER		
18" X 24"	1012250	BLACK	23.7	17.7
	1008687	SILVER		
22" X 48"	1012251	BLACK	47.7	21.7
	1008693	SILVER		
22" X 24"	1012252	BLACK	23.7	21.7
	1008695	SILVER		

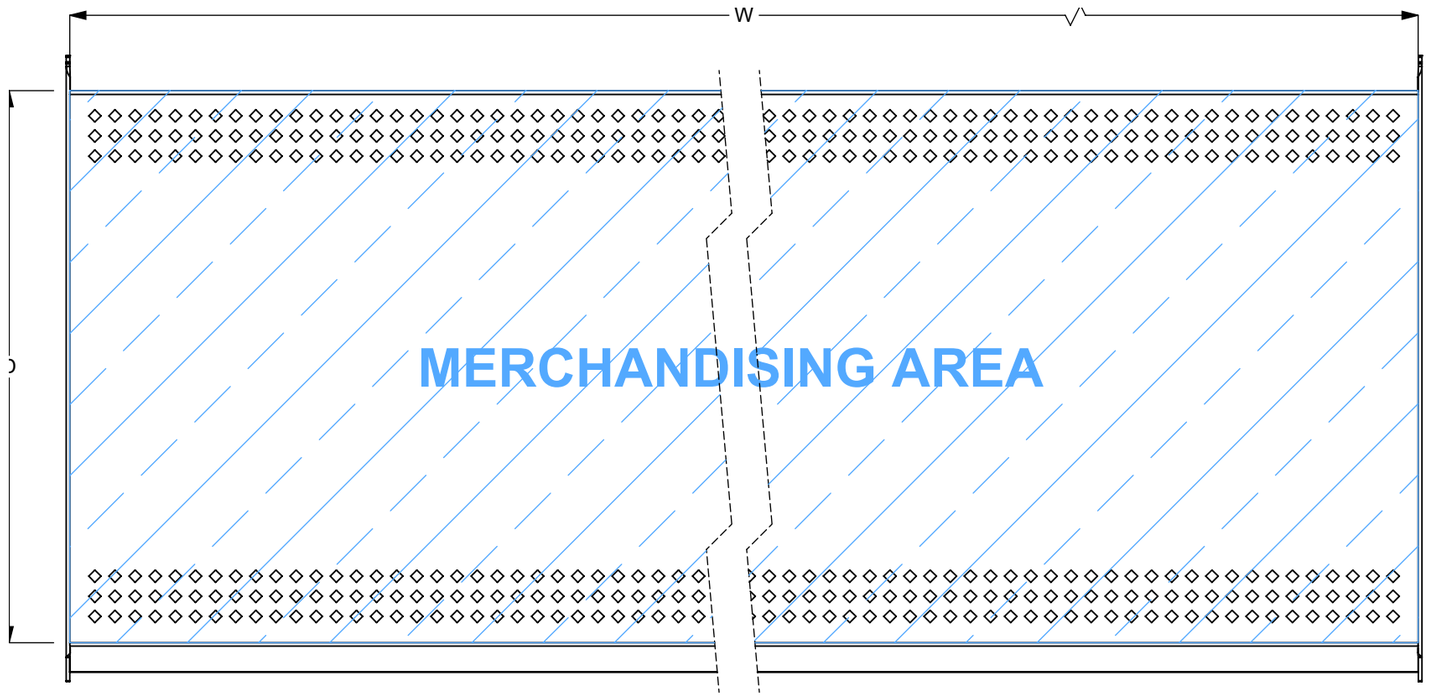

DIMENSIONS IN INCHES

Last Updated August 12, 2026 8:20 AM | Best Buy partner and internal use only. Do not copy, publish, or distribute. The material in this document is confidential to Best Buy.

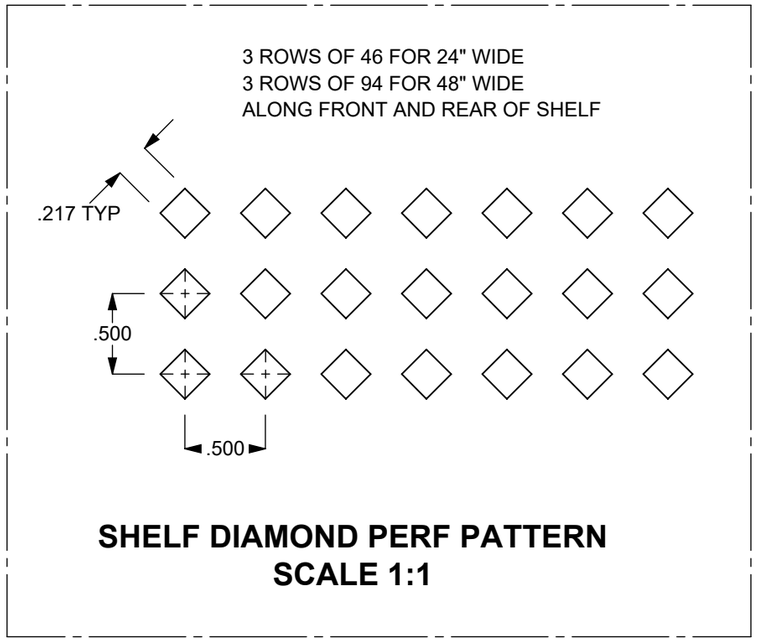

SHELF DIAMOND PERF PATTERN
SCALE 1:1

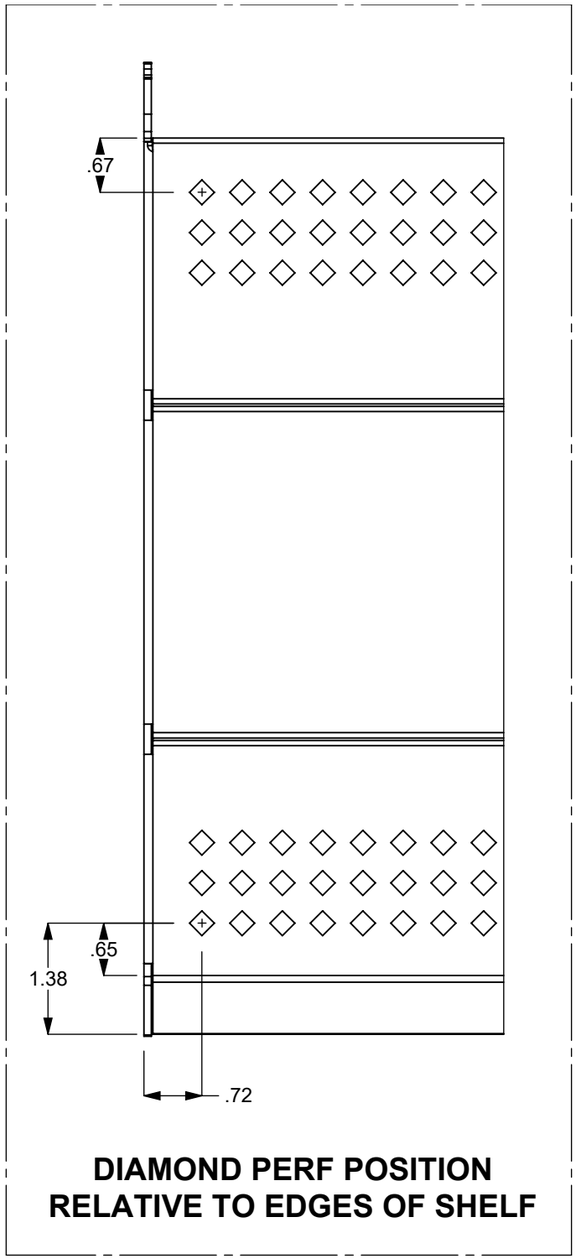

DIAMOND PERF POSITION
RELATIVE TO EDGES OF SHELF

Last Updated August 12, 2026 8:20 AM | Best Buy partner and internal use only. Do not copy, publish, or distribute. The material in this document is confidential to Best Buy.

22" METAL SECURITY CABINET / SHELF

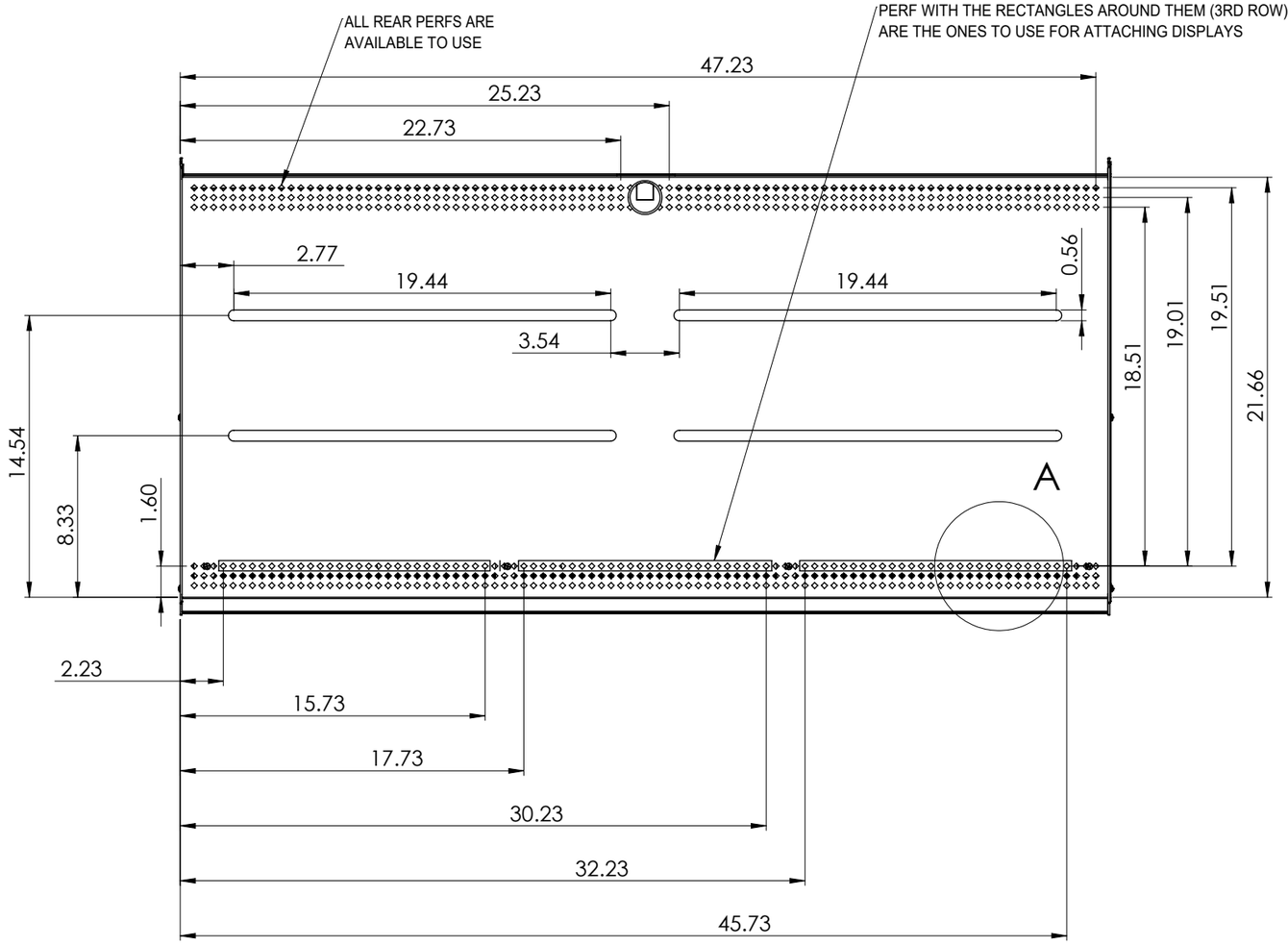

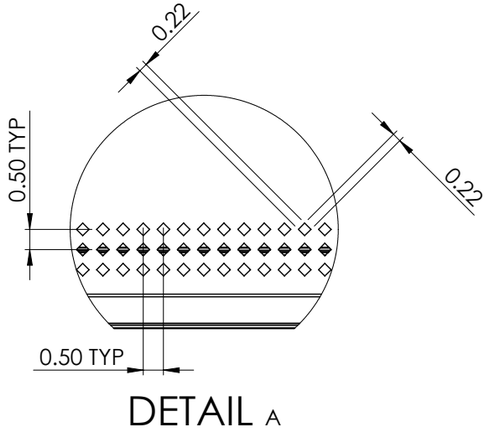

DETAIL A

Last Updated August 12, 2026 8:20 AM | Best Buy partner and internal use only. Do not copy, publish, or distribute. The material in this document is confidential to Best Buy.

SKINNY SECURITY CABINET / 12" SHELF

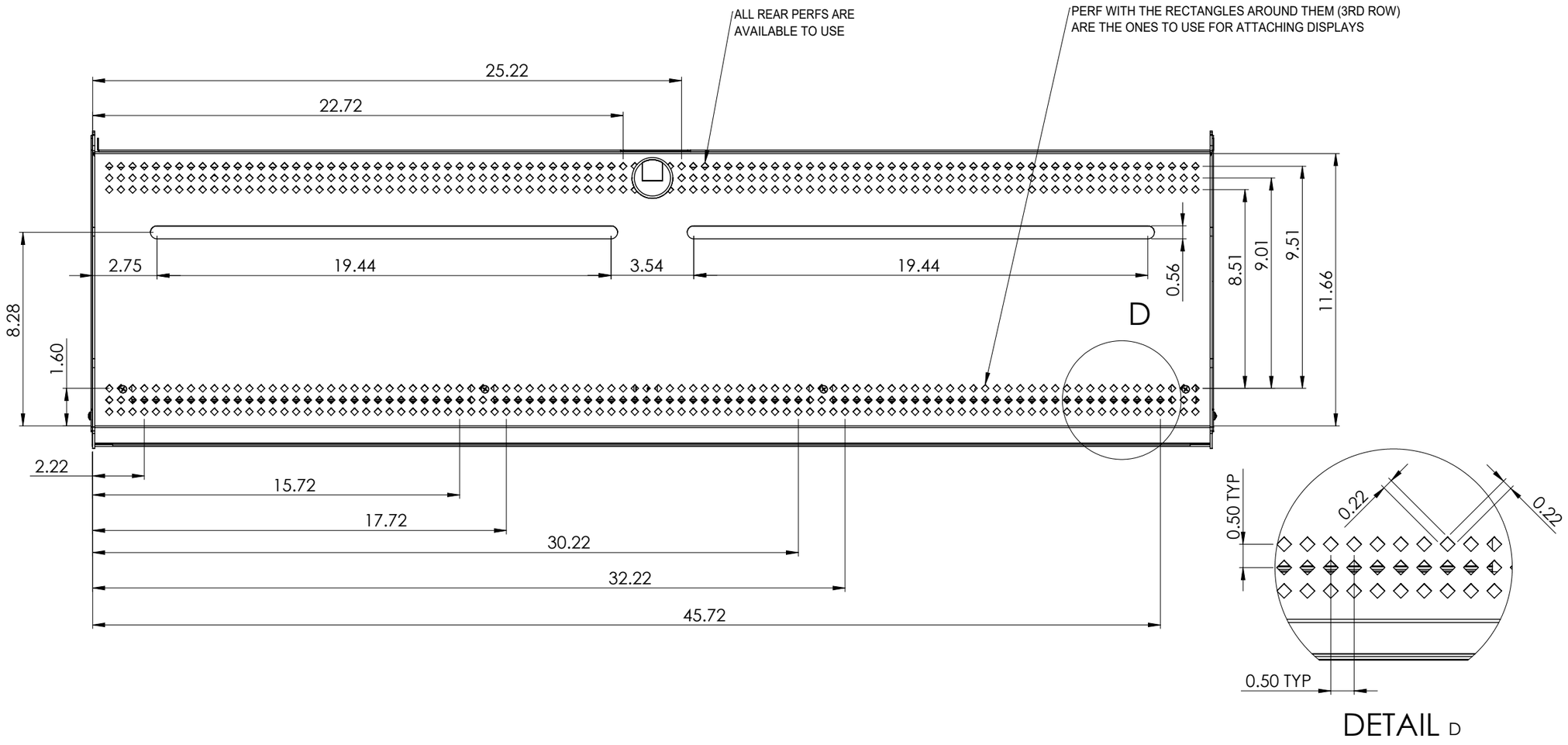

Last Updated August 12, 2026 8:20 AM | Best Buy partner and internal use only. Do not copy, publish, or distribute. The material in this document is confidential to Best Buy.

14" BLACK SHELF W/ SLOTS

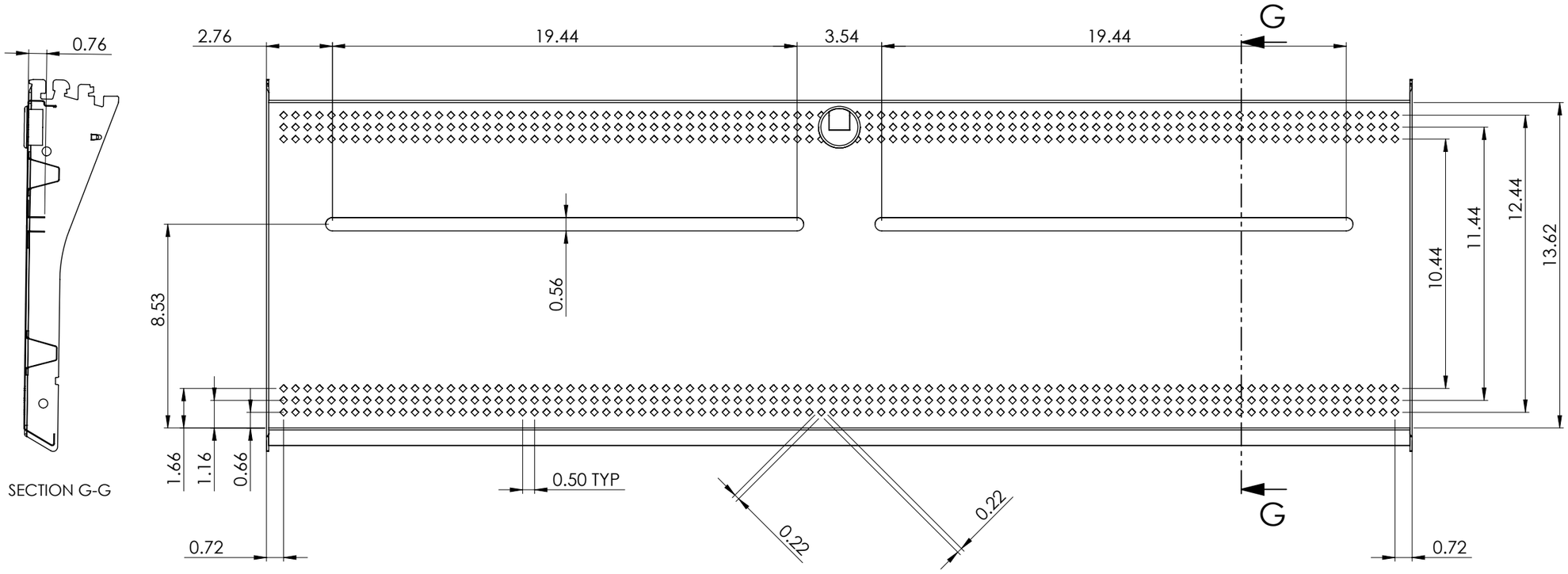

Last Updated August 12, 2026 8:20 AM | Best Buy partner and internal use only. Do not copy, publish, or distribute. The material in this document is confidential to Best Buy.

18" BLACK SHELF W/ SLOTS

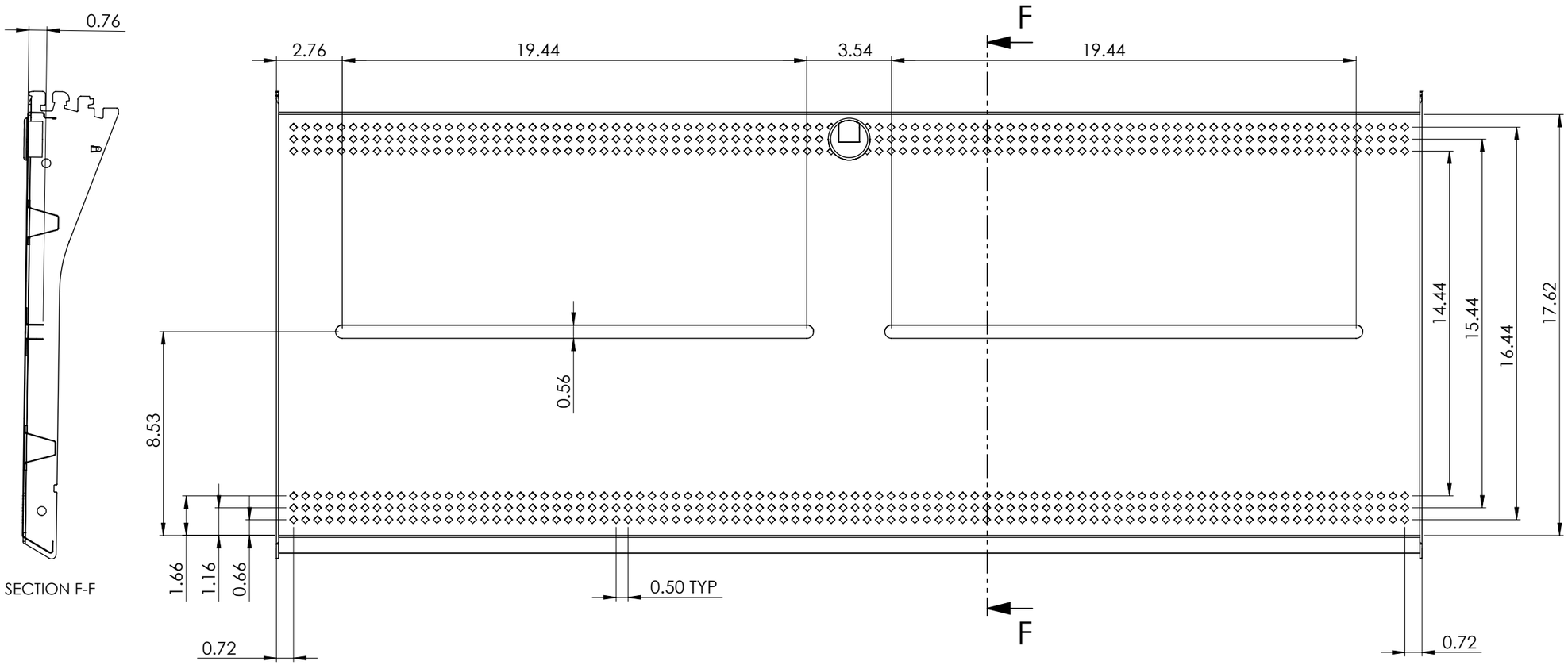

Last Updated August 12, 2026 8:20 AM | Best Buy partner and internal use only. Do not copy, publish, or distribute. The material in this document is confidential to Best Buy.

Side Stock Endcap

Side Stock Endcap

The Side Stock Endcap creates a consistent, display-centric presentation that visually minimizes salable product stock.

Unlike other Best Buy endcaps, tight guidelines are in place for Side Stock Endcaps. The outcome is a more flexible, transactional fixture that allows cost effective design solutions and easy installation and removal.

Best Buy-Managed Components
- Core fixture elements
- Pricing ESLs

Vendor-Managed Components
- Any product featured as display or demo on the top wood surface
- Platforms, security, data and power attachments needed for display or demo products on top wood surface
- Magnetic graphics for top and bottom panels
- Printed logo Header

**Drawings and models of all parts available upon request.*

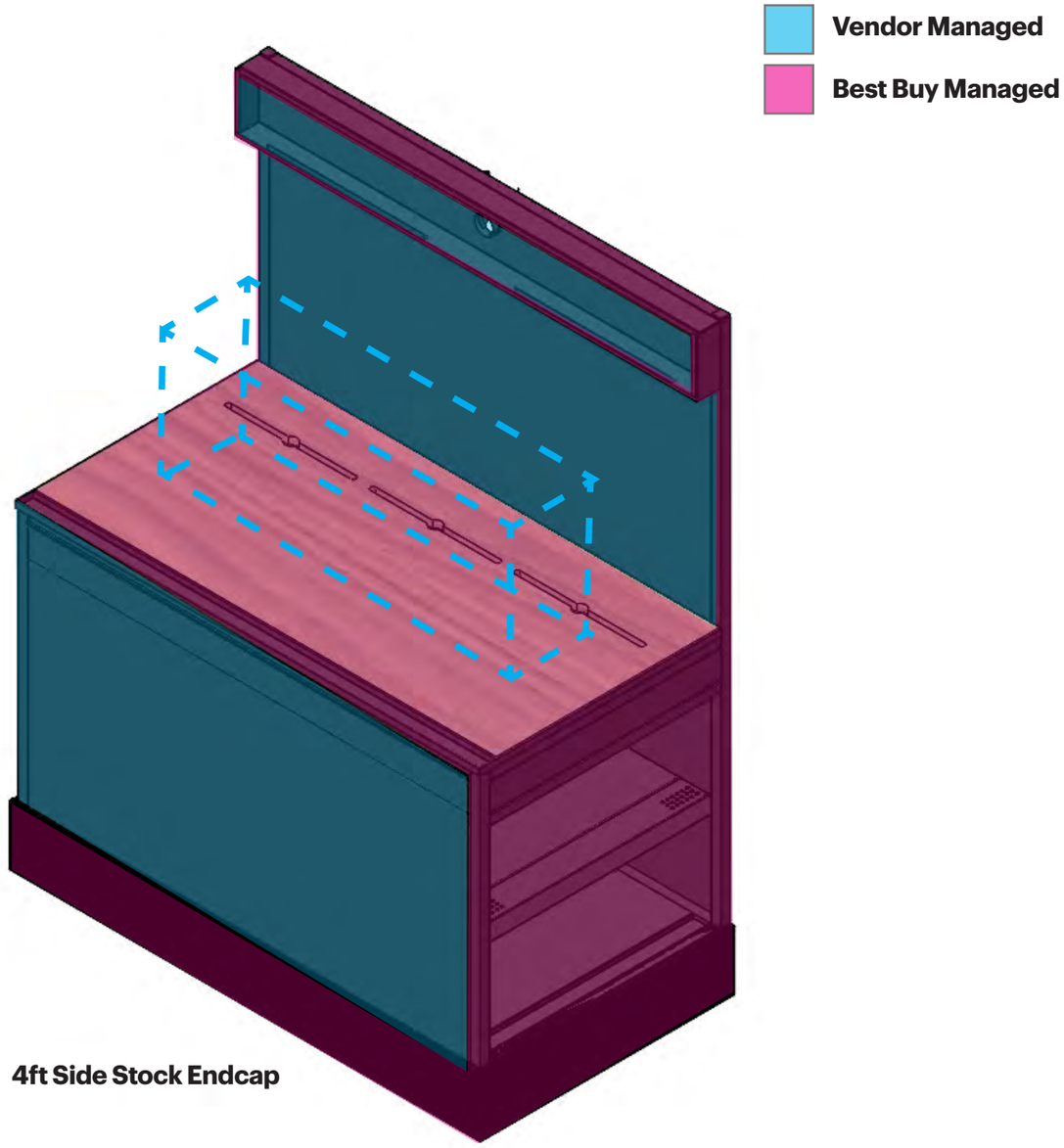

4ft Side Stock Endcap

Last Updated August 12, 2026 8:20 AM | Best Buy partner and internal use only. Do not copy, publish, or distribute. The material in this document is confidential to Best Buy.

Overall Dimensions

2ft Side Stock Endcap

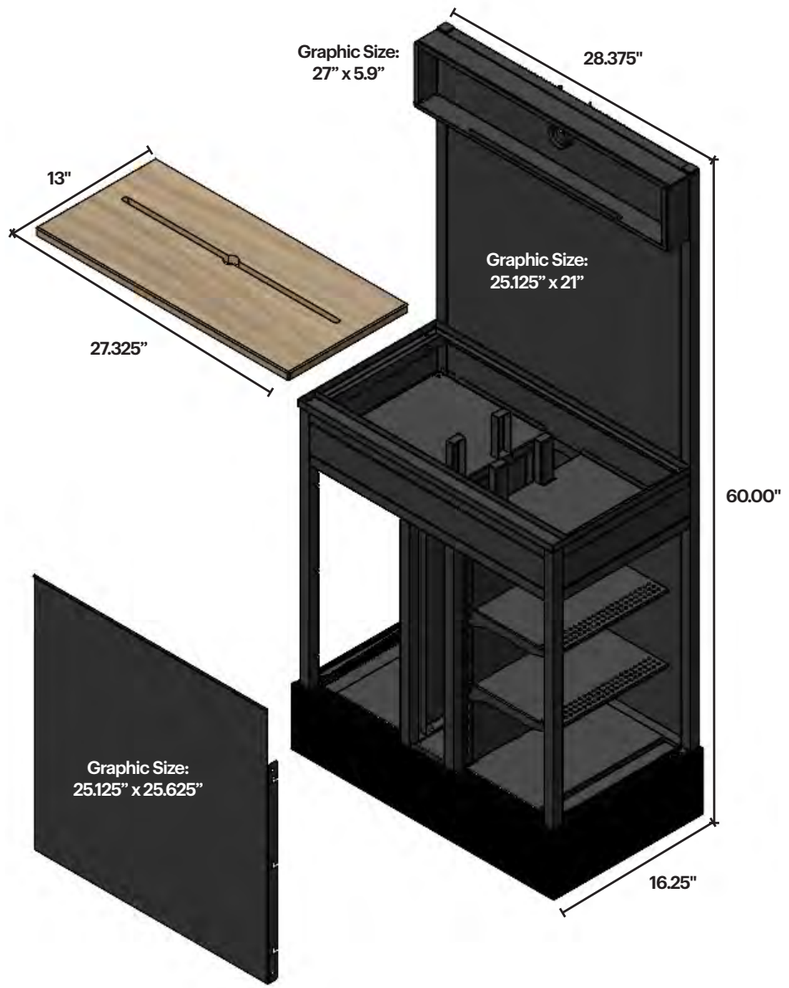

4ft Side Stock Endcap

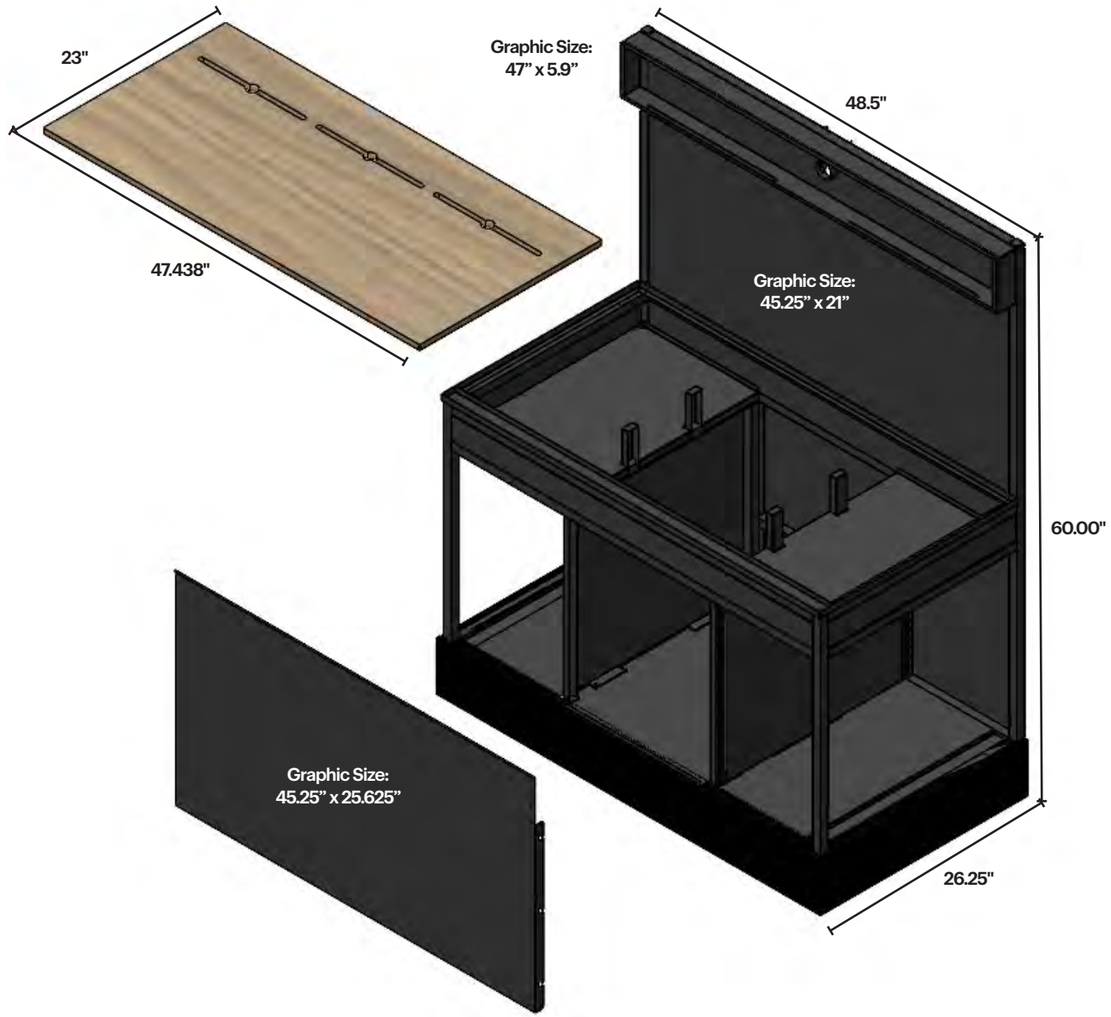

*Dimensions are for reference only.
Drawings and models of all parts available upon request.

Last Updated August 12, 2026 8:20 AM | Best Buy partner and internal use only. Do not copy, publish, or distribute. The material in this document is confidential to Best Buy.

4ft Endcap Top Wood Surfaces Detailed Dimensions

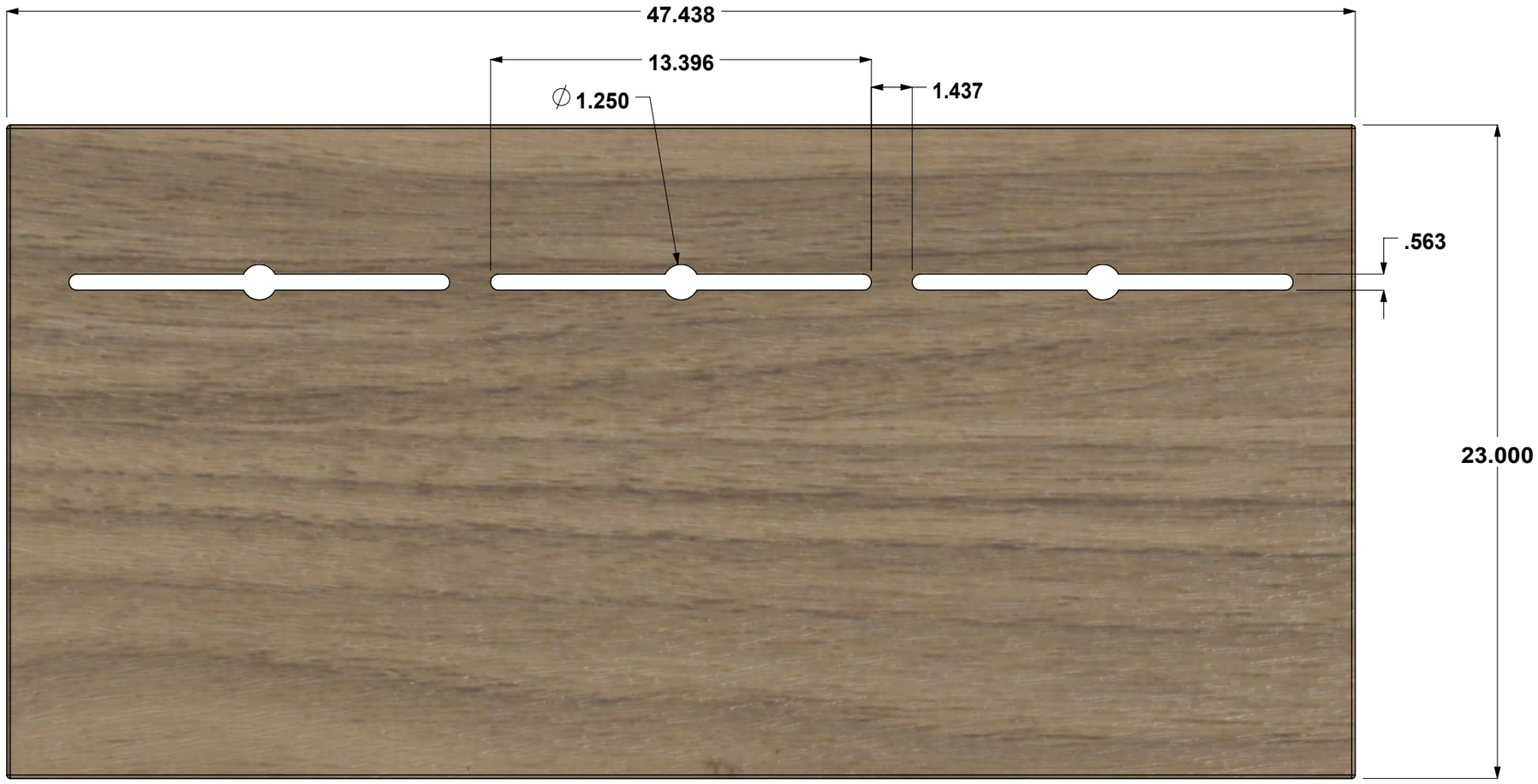

*Dimensions are for reference only.
Drawings and models of all parts available upon request.

Last Updated August 12, 2026 8:20 AM | Best Buy partner and internal use only. Do not copy, publish, or distribute. The material in this document is confidential to Best Buy.

2ft Endcap Top Wood Surfaces Detailed Dimensions

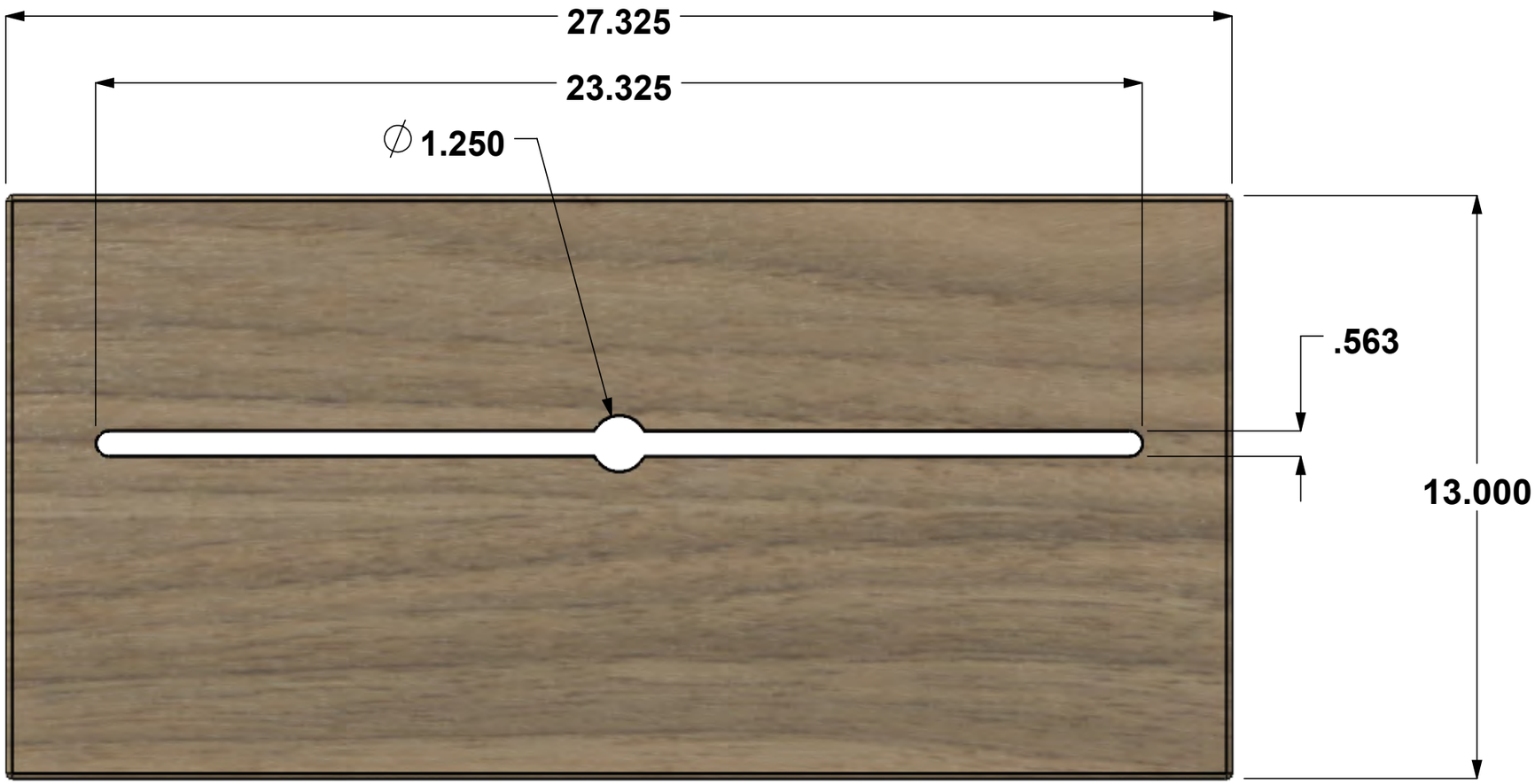

*Dimensions are for reference only.
**Drawings and models of all parts available upon request.*

Last Updated August 12, 2026 8:20 AM | Best Buy partner and internal use only. Do not copy, publish, or distribute. The material in this document is confidential to Best Buy.

Side Stock Table

The spine of back-to-back Side Stock Endcaps can be removed to create a larger table presentation. This allows for display space for larger displays while still visually minimizing salable product stock.

Tight guidelines are in place for Side Stock Tables. The outcome is a more flexible, transactional fixture that allows cost effective design solutions and easy installation and removal.

Best Buy-Managed Components
- Core fixture elements
- Pricing ESLs

Vendor-Managed Components
- Any product featured as display or demo on the top wood surface
- Platforms, security, data and power attachments needed for display or demo products on top wood surface
- Magnetic graphics for the bottom panels

Side Stock Table



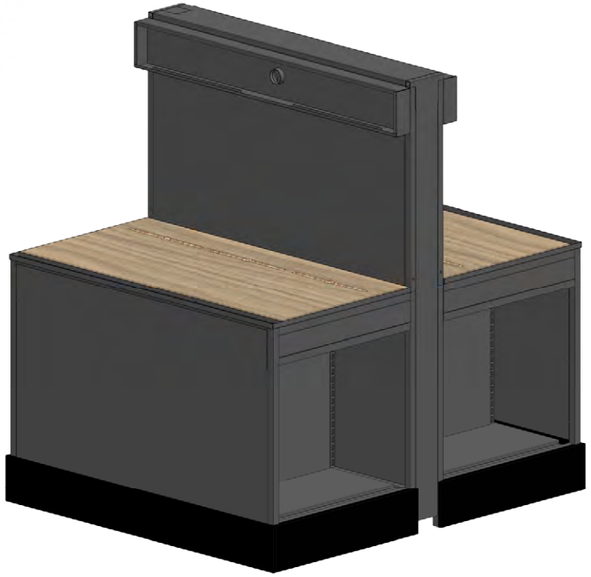

Back-to-back Side Stock Endcaps

*Dimensions are for reference only.
**Drawings and models of all parts available upon request.*

Last Updated August 12, 2026 8:20 AM | Best Buy partner and internal use only. Do not copy, publish, or distribute. The material in this document is confidential to Best Buy.

Table Top Wood Surface Detailed Dimensions

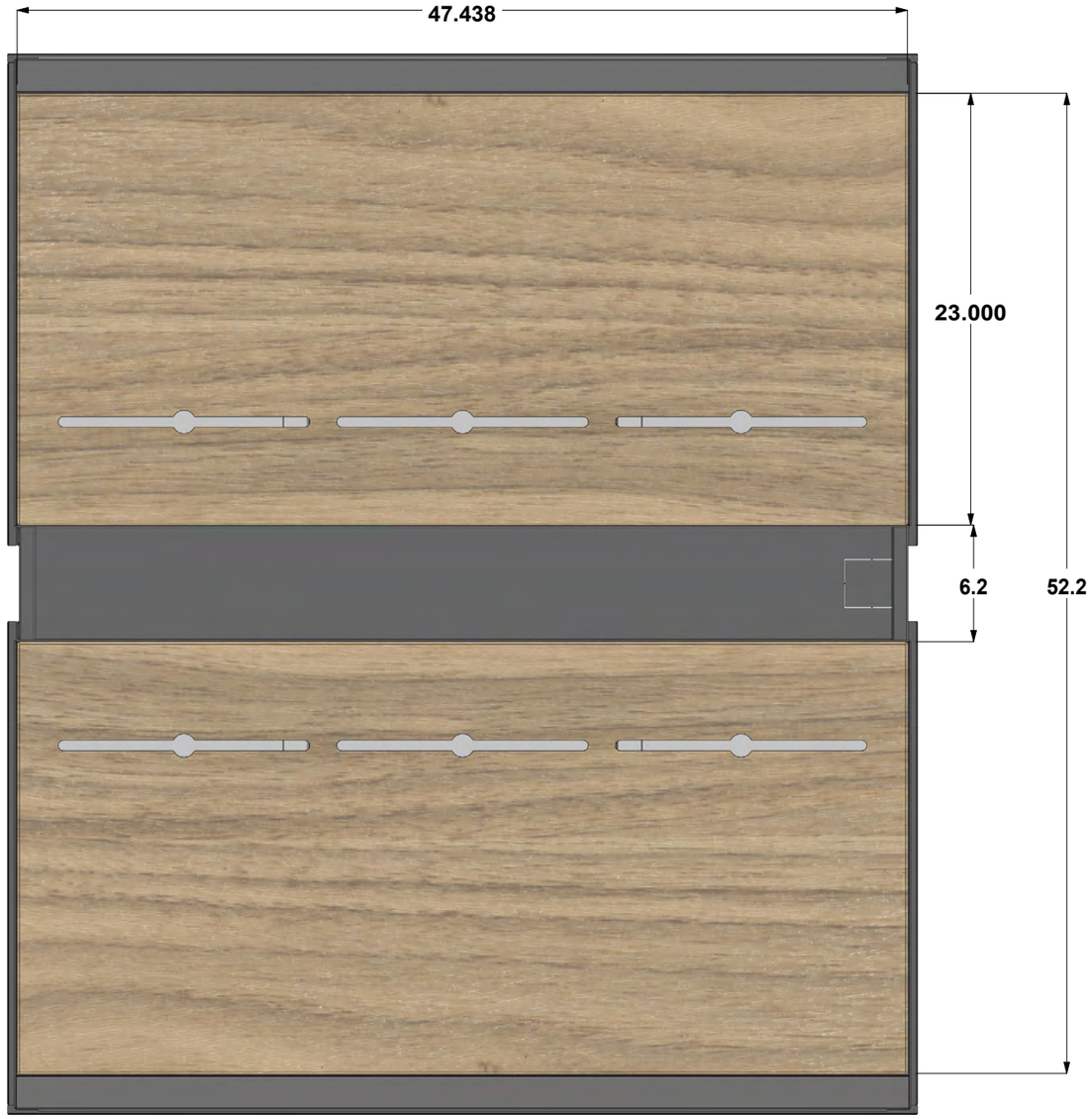

*Dimensions are for reference only.
**Drawings and models of all parts available upon request.*

Last Updated August 12, 2026 8:20 AM | Best Buy partner and internal use only. Do not copy, publish, or distribute. The material in this document is confidential to Best Buy.

Security, Attachments and Power

- Switched power would be approximately .8 amps per display position and continuous power would be taken from wall breakout which equates to a little over 2 amps per display position
- Utilize the center slot for mounting larger/heavier displays to the Top Wood Surface
- The center slot is fully accessible through the removable Bottom Magnetic Panel for attaching the washers and wing nuts
- Presentations can utilize any or all three slots.
- The Top Wood Surface can be lifted off the endcap to allow access for display installation and before resetting back in place
- The Top wood Surface can be spun around, making the attachment slots at the front of the table, depending on presentation need



Center slot for mounting larger/heavier displays

Smaller fixtures can utilize any or all three slots

Preferred attachment hardware

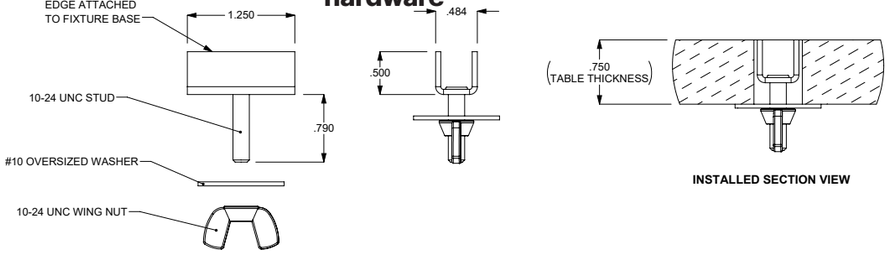



The center slot is fully accessible through the Bottom Magnetic Panel for attaching the washers and wing nuts

**Drawings and models of all parts available upon request.*

Last Updated August 12, 2026 8:20 AM | Best Buy partner and internal use only. Do not copy, publish, or distribute. The material in this document is confidential to Best Buy.

Security, Attachments and Power

- Security cables and product platforms can attach to the fixture and be snaked through cutout on the back of the top wood surface
- The provided top wood surface should be leveraged as the main display backdrop for product presentations. It can be covered by a vendor-supplied surface as a less-preferred alternative.
- If top wood surface is damaged or altered in any way, vendors are responsible for replacing it upon vacating space
- Front panels are removable to provide easy access to fixture interiors
- Power can be accessed through mouse holes in the back and bottom of the fixture



Drawings and models of all parts available upon request.

***Power strip is provided in both endcaps**

Last Updated August 12, 2026 8:20 AM | Best Buy partner and internal use only. Do not copy, publish, or distribute. The material in this document is confidential to Best Buy.

Endcap Graphics

Expectations

- Header must follow template and material specifications exactly, and include only a white vendor logo (max 2.88” high) printed directly on the black substrate
- Graphics on the magnetic panels should be visually uncluttered and not distract from the products on display
- Copy and logos are not permitted on the bottom magnetic panel
- Additional graphics and educational touchpoints can be added, but not cover more than 25% of the top wood surface

Best Practices

- The Side Stock Endcaps are intended for a concise product display providing “at a glance” engagement and understanding
- Keep product education simple and brief

Find more details and dimensions in these guides on Partner Portal:

Copy & Claims Guidelines

Graphic Activation Areas

1. Header
2. Top Magnetic Panel
3. Top Wood Surface
4. ESL Channel
5. Bottom Magnetic Panel
6. Salable Merchandising Area

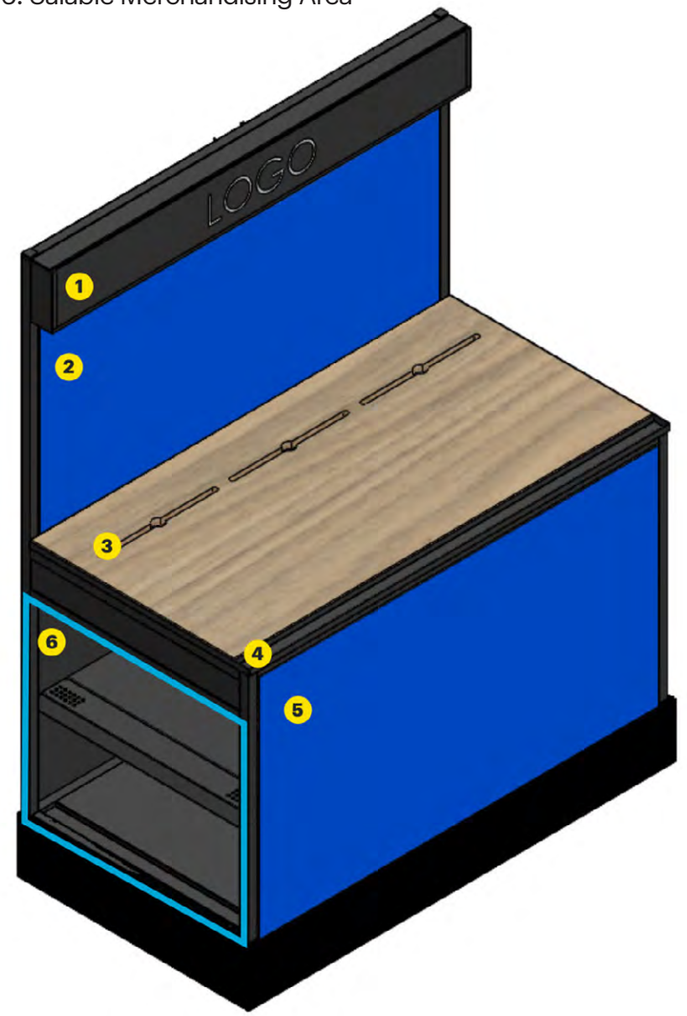

Print and substrate Information:

Dieline name: “Dieline_4ft_Header_47x5.9”
Size: 47 (w) x 5.9 (h)
Substrate: .1875 Ultraboard, Black/Black/Black

Dieline name: “Dieline_4ft_TopBacker_45.250x21”
Size: 45.250 (w) x 21 (h)
Substrate: 20mil Magnetic Vinyl, White

Dieline name: “Dieline_4ft_BaseFront_45.250x25.625”
Size: 45.25 (w) x 25.625 (h)
Substrate: 20mil Magnetic Vinyl, White

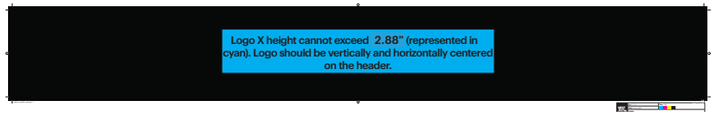

Dieline_4ft_Header_47x5.9

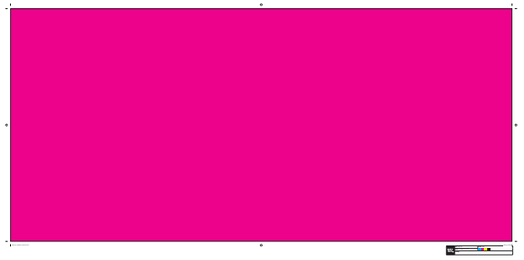

Dieline_4ft_TopBacker_45.250x21

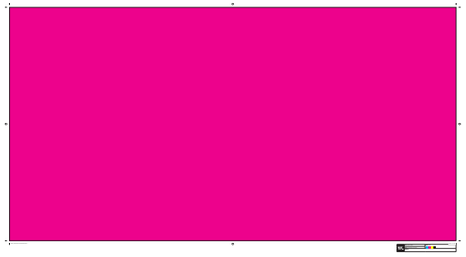

Dieline_4ft_BaseFront_45.250x25.625

Last Updated August 12, 2026 8:20 AM | Best Buy partner and internal use only. Do not copy, publish, or distribute. The material in this document is confidential to Best Buy.

Table Graphics

Expectations

- Graphics on the magnetic panels should be visually uncluttered and not distract from the products on display
- Copy and logos are not permitted on the bottom magnetic panel
- Additional graphics and educational touchpoints can be added, but not cover more than 25% of the top wood surface

Best Practices

- The Side Stock Tables are intended for a concise product display providing “at a glance” engagement and understanding
- Keep product education simple and brief

Graphic Activation Areas

1. Top Wood Surfaces
2. ESL Channels
3. Bottom Magnetic Panels

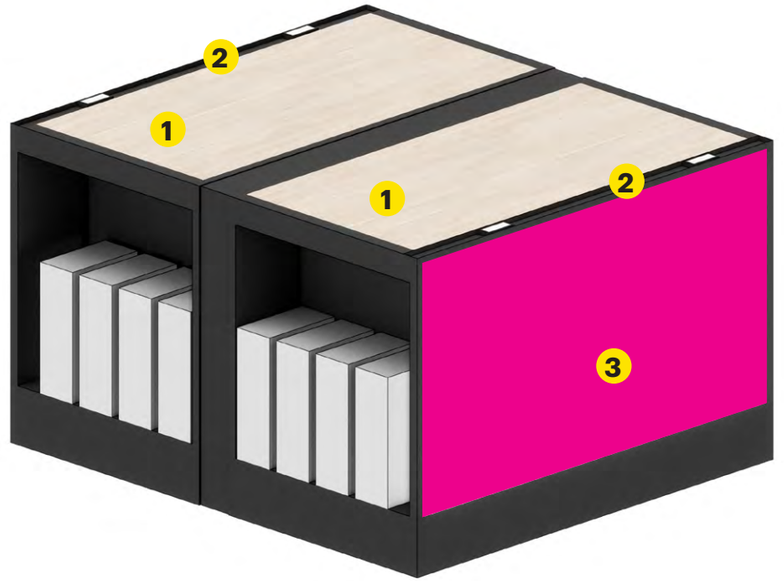

Print and substrate Information:

Dieline name: “Dieline_4ft_BaseFront_45.250x25.625”
Size: 45.25 (w) x 25.625 (h)
Substrate: 20mil Magnetic Vinyl, White

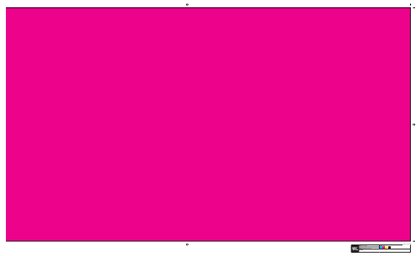

Dieline_4ft_BaseFront_45.250x25.625

Find more details and dimensions in these guides on Partner Portal:

Copy & Claims Guidelines

Last Updated August 12, 2026 8:20 AM | Best Buy partner and internal use only. Do not copy, publish, or distribute. The material in this document is confidential to Best Buy.

Graphics — Product Fulfillment

With their display-centric presentations, and diminished room for salable stock, these fixtures require extra communication on product fulfillment.

Best Buy will provide and planogram a “Scan. Learn. Buy.” Channel Insert (shown at right). In addition to this piece, vendors ***should supplement with their own fulfillment messaging***.

Vendor Expectations

- Include in your collateral a directive for product fulfillment.
  - — Examples:
    Scan price tag QR codes to:
    · Get product info
    · Check availability
    · Get expert help
    · Send to Order Pickup

    Scan price tag QR codes to send to Order Pickup.

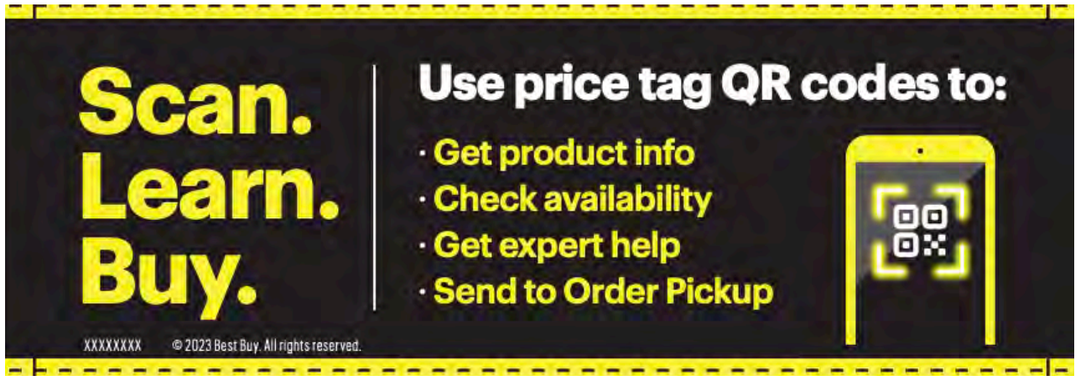

Channel insert

Last Updated August 12, 2026 8:20 AM | Best Buy partner and internal use only. Do not copy, publish, or distribute. The material in this document is confidential to Best Buy.

Endcap Merchandising

Expectations

- All presentations require Demo, Display or Dead Mock Display product(s) to be included
- All interactive elements must meet accessibility standards
- Display/demo products on top wood surface need to be secured leveraging platforms, cables or mounts
- Products may not extend above logo header panel or beyond the sides of the fixture
- Logo on header should not be visually obstructed by products
- Additional graphics and educational touchpoints can be added, but not cover more than 25% of the top wood surface
- Every display or salable SKU needs a Peg Label a or Fact Tag ESL

Best Practices

- Curate the total number of displayed SKUs and storytelling touchpoints



Last Updated August 12, 2026 8:20 AM | Best Buy partner and internal use only. Do not copy, publish, or distribute. The material in this document is confidential to Best Buy.

Table Merchandising

Expectations

- All presentations require Demo, Display or Dead Mock Display product(s) to be included
- All interactive elements must meet accessibility standards
- Display/demo products on top wood surface need to be secured leveraging platforms, cables or mounts
- Products may not extend beyond the sides of the fixture
- Additional graphics and educational touchpoints can be added, but not cover more than 25% of the top wood surface
- Every display or salable SKU needs a Peg Label or Fact Tag ESL
- Plan for presentation elements giving clear space to accommodate power drop if required

Best Practices

- Fixture was intended to be leveraged as a front and a back with salable stock on the sides, rather than a 360 ° shopping experience
- Curate the total number of displayed SKUs and storytelling touchpoints



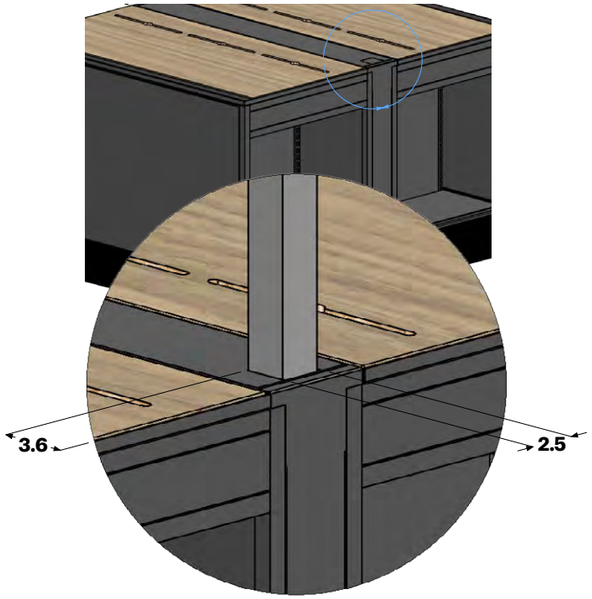

Last Updated August 12, 2026 8:20 AM | Best Buy partner and internal use only. Do not copy, publish, or distribute. The material in this document is confidential to Best Buy.

Fixture Modularity

Expectations

- Larger box stock product can be accommodated by removing the two interior panels allowing products to extend up to the entire width of the fixture
- Standards have been built into the sides of the fixtures and standard Best Buy peghooks, 2ft merch bars and 2ft shelves can be used in these areas
- Non-standard 12.5”cross bars are orderable for pegged presentations on the 2ft Endcap
- Detailed documentation exists on the interior cavity, partner with project manager for those details



Interior Panels can be removed to allow for large box stock



Non-standard 12.5” cross bar for use on the 2ft Side Stock Endcap. EPDM# 1023564

Shelves, peghooks, and merch bars can be leveraged on sides

Last Updated August 12, 2026 8:20 AM | Best Buy partner and internal use only. Do not copy, publish, or distribute. The material in this document is confidential to Best Buy.

Fixture Parts

Refer to the part numbers below when ordering any necessary components:

Fixture	Fixture Component	Best Buy Part Number
4ft Side Stock Endcap	4 foot Side Stock Endcap	1024466
4ft Side Stock Endcap	24” Merch Bar	1010635
4ft Side Stock Endcap	8” peghook	1010754
4ft Side Stock Endcap	Shelf, 12” D x 24” W	1017788
2ft Side Stock Endcap	2 Foot Side Stock Endcap	1023508
2ft Side Stock Endcap	12.5” Merch Bar	1023564
2ft Side Stock Endcap	4” Peghook	1010717
2ft Side Stock Endcap	Shelf, 8.7” D x 12.5” W	1023565

Last Updated August 12, 2026 8:20 AM | Best Buy partner and internal use only. Do not copy, publish, or distribute. The material in this document is confidential to Best Buy.

Slotted Vertical Uprights

Overview

Slotted vertical uprights are the primary form of attachment for shelves, graphics, and displays on Best Buy racking fixtures, including lowbay, high bay, and perimeter racking.

**Drawings and models of all parts available upon request.*

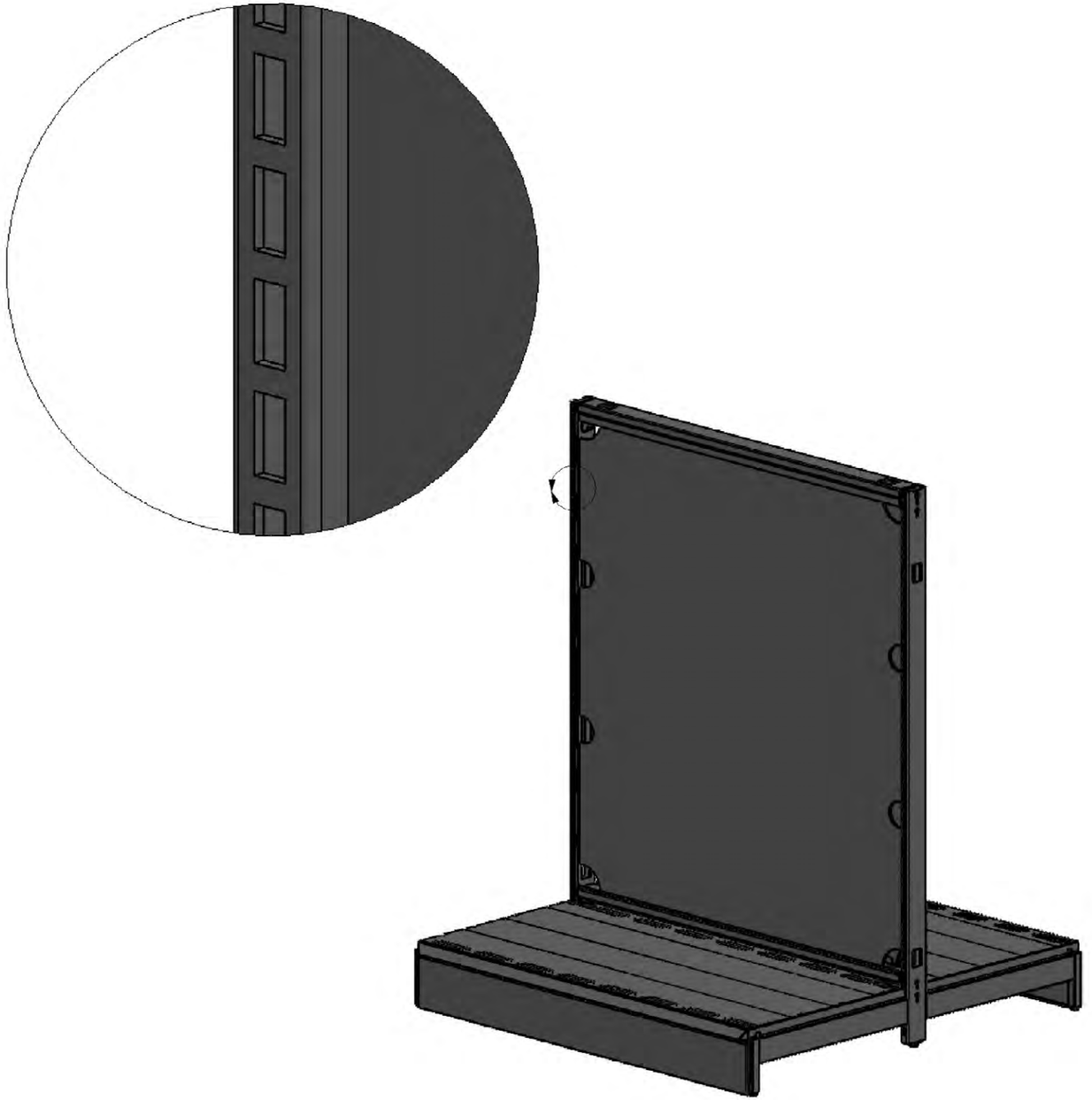

Last Updated August 12, 2026 8:20 AM | Best Buy partner and internal use only. Do not copy, publish, or distribute. The material in this document is confidential to Best Buy.

Spacing

Slotted vertical uprights are spaced in increments of either 24” or 48”—center-to-center—on most lowbay and perimeter fixtures.

Shelves, graphics and displays that attach to the uprights must be 0.125” less than the uprights to ensure a proper fit.

— A 48” span holds a display that is 47.875” wide.

Although single-increment attachments are preferred, your presentation may span multiple uprights if needed. If this is the case, the same 0.125” rule applies.

— A 96” span holds a display that is 95.875” wide.

— A 144” span holds a display that is 143.875” wide.

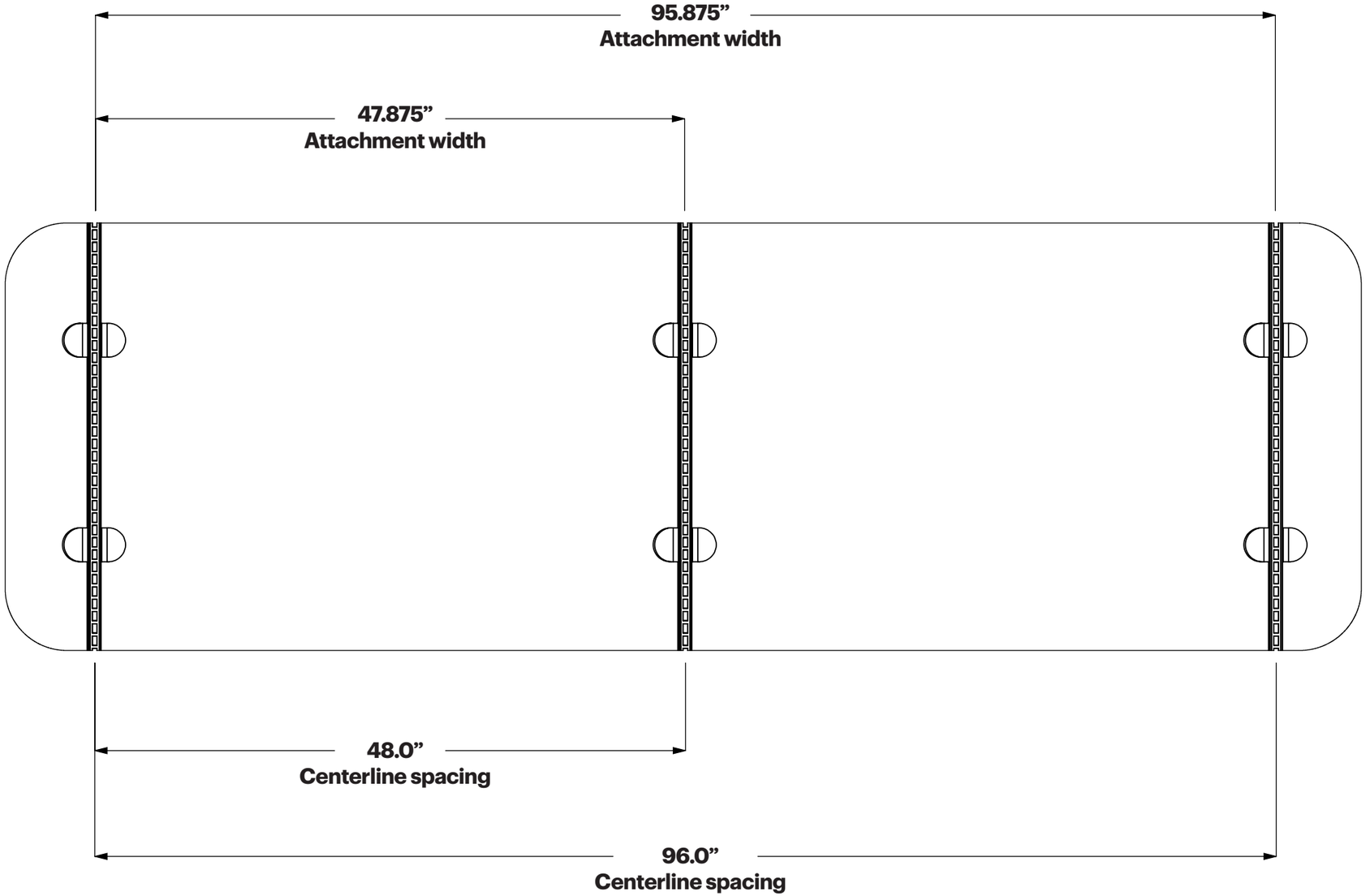

Last Updated August 12, 2026 8:20 AM | Best Buy partner and internal use only. Do not copy, publish, or distribute. The material in this document is confidential to Best Buy.

Slot Dimensions

Upright slots are 0.75”H x 0.375”W. They are spaced 0.25” apart in a repeating pattern. The upright thickness is 9-gauge (0.115”).

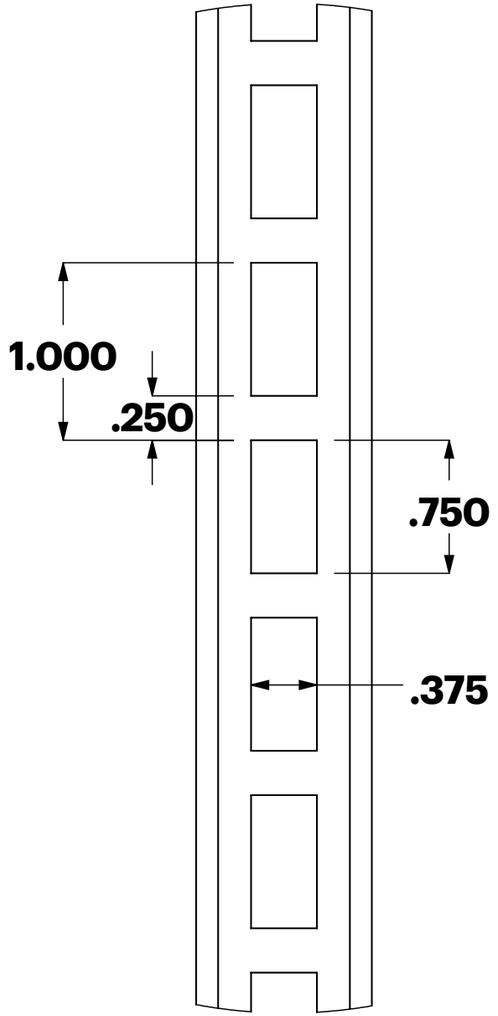

Front View

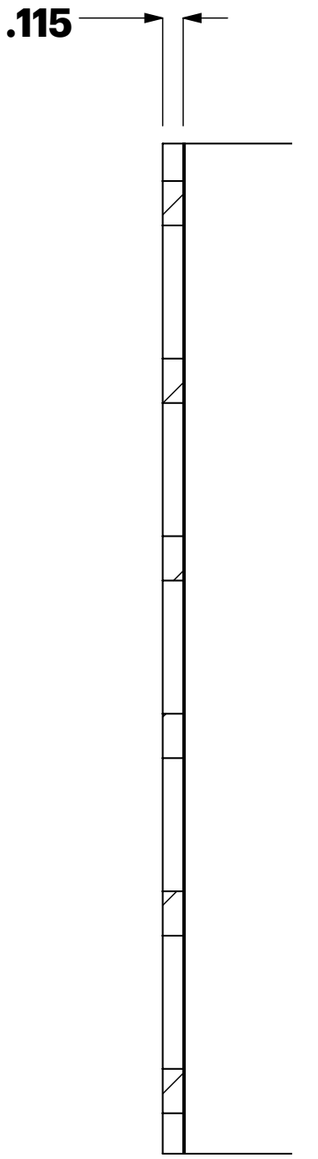

Side Section View

Last Updated August 12, 2026 8:20 AM | Best Buy partner and internal use only. Do not copy, publish, or distribute. The material in this document is confidential to Best Buy.

Recommended Attachments

Fixtures are attached to uprights with teeth (also referred to as tabs or hooks). The following are Best Buy's recommended attachment styles to utilize for your display:

- Light Duty Tooth
- Tip-in Tooth
- Heavy Duty Tooth
- Locking Tooth

**Drawings and models of all parts available upon request.*

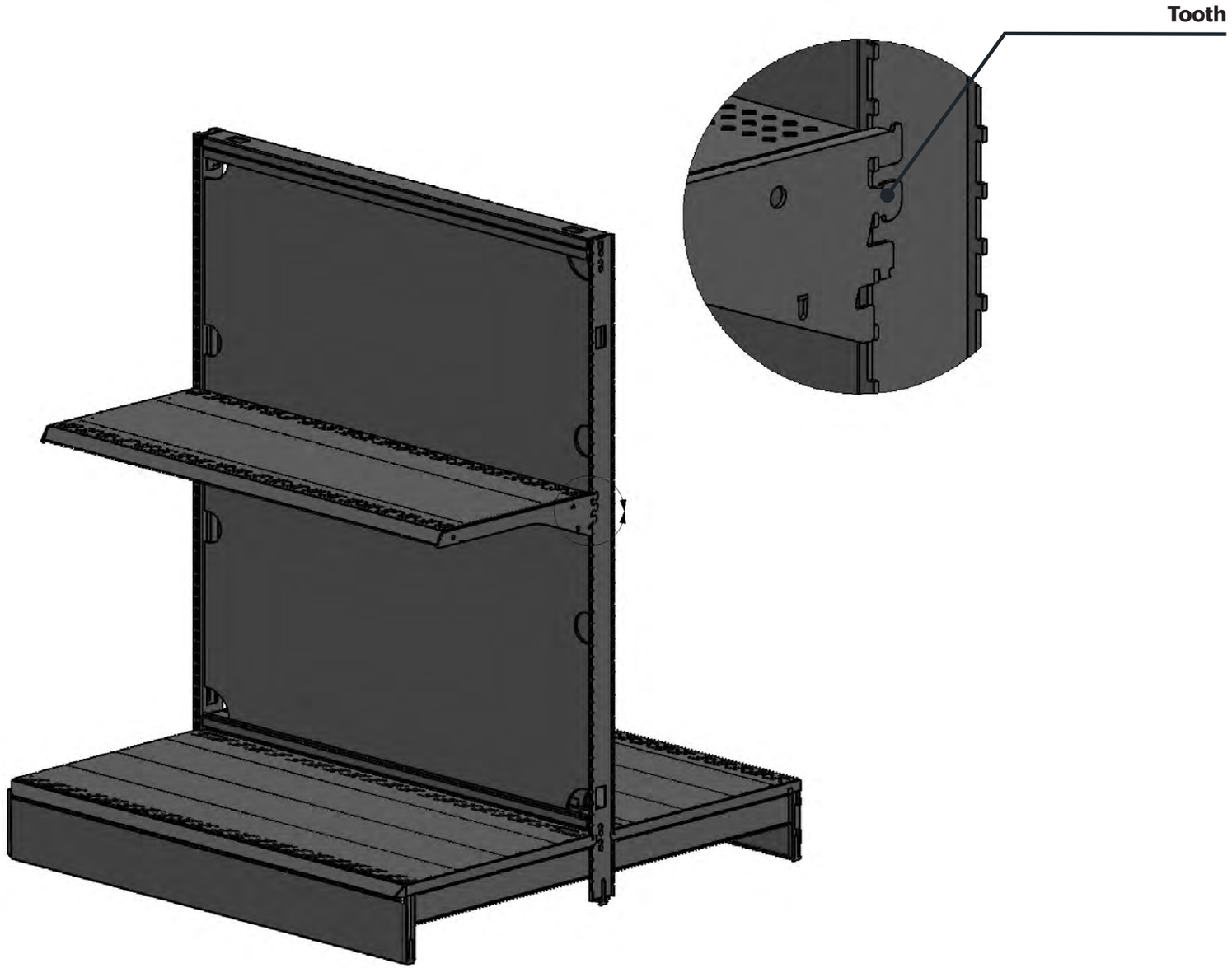

Last Updated August 12, 2026 8:20 AM | Best Buy partner and internal use only. Do not copy, publish, or distribute. The material in this document is confidential to Best Buy.

Light Duty Tooth

This basic tooth pattern is primarily used for lightweight displays. It is non-load bearing and cannot be used for demo products.

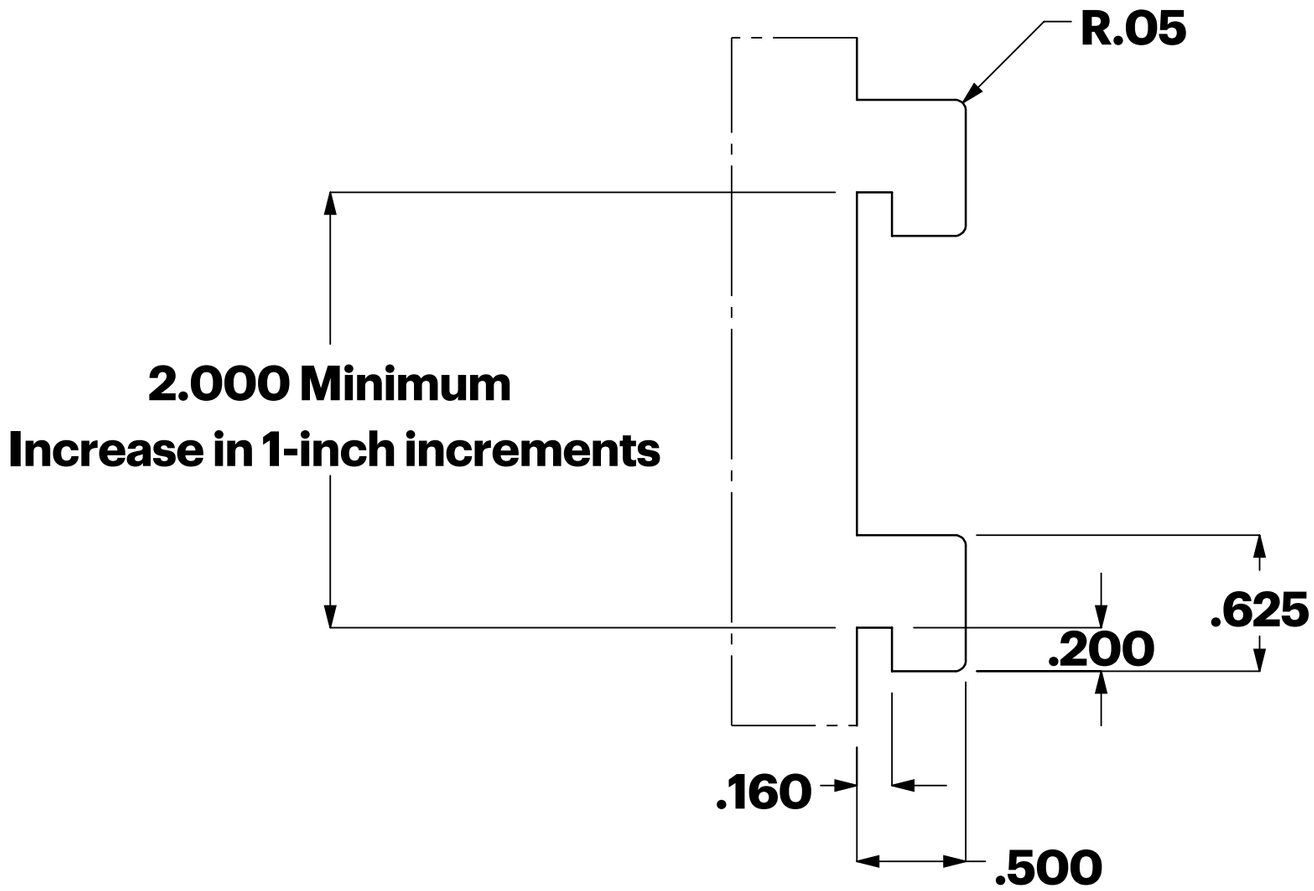

Last Updated August 12, 2026 8:20 AM | Best Buy partner and internal use only. Do not copy, publish, or distribute. The material in this document is confidential to Best Buy.

Tip-in Tooth

This secure tooth prevents the attached fixture from sliding out when upward force is applied. It is primarily used on merchandise bars or for demo products and peggable products.

The Tip-in Tooth is not recommended for larger/heavier fixtures where tip installation would be prohibitive.

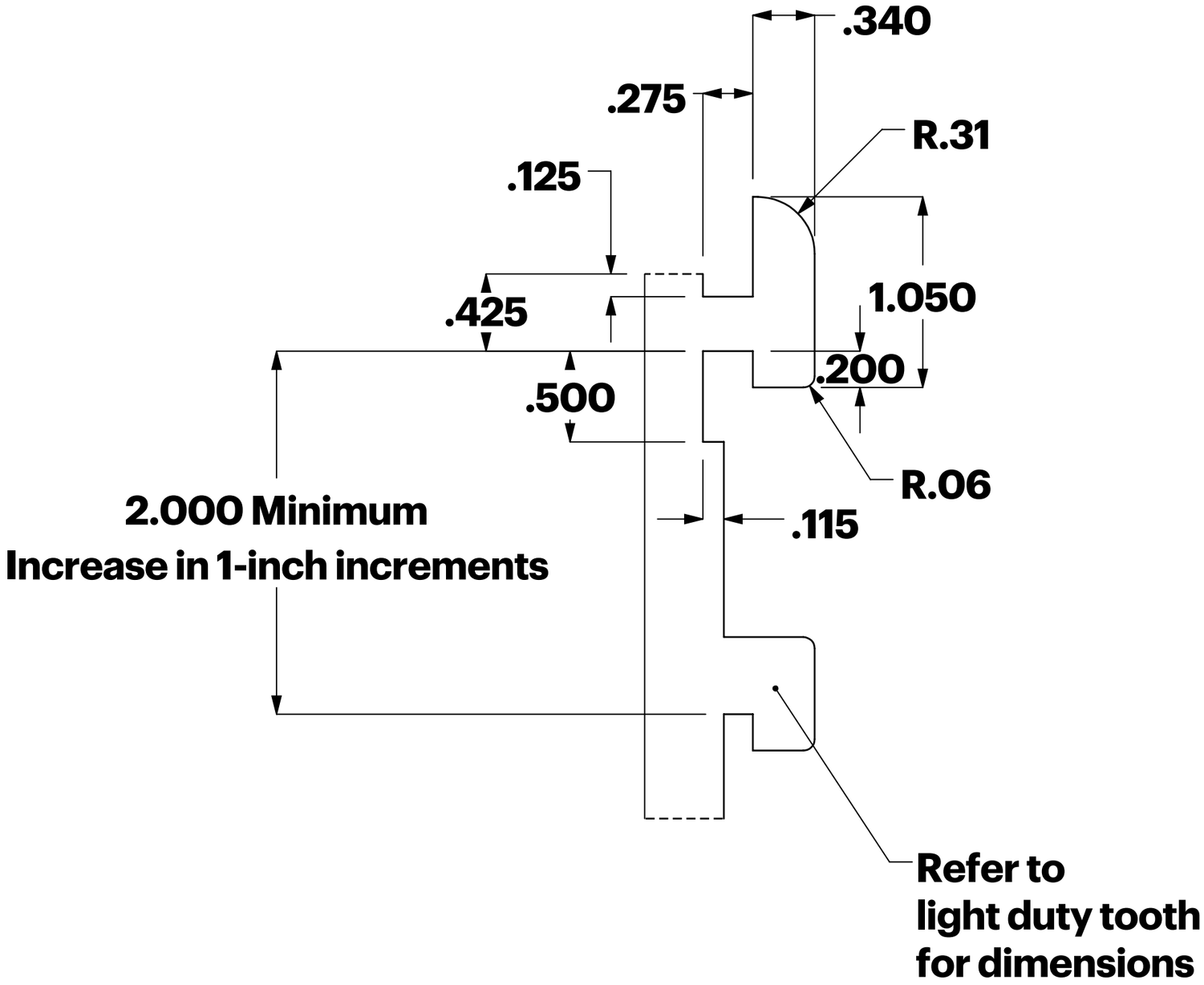

Last Updated August 12, 2026 8:20 AM | Best Buy partner and internal use only. Do not copy, publish, or distribute. The material in this document is confidential to Best Buy.

Heavy Duty Tooth

This tooth pattern is primarily used for shelves and heavier loads. It features 3+ teeth for stability, a 0.5-degree “lift” on the shelf to account for sag from loading, and a lower extension that rests on the front of the upright.

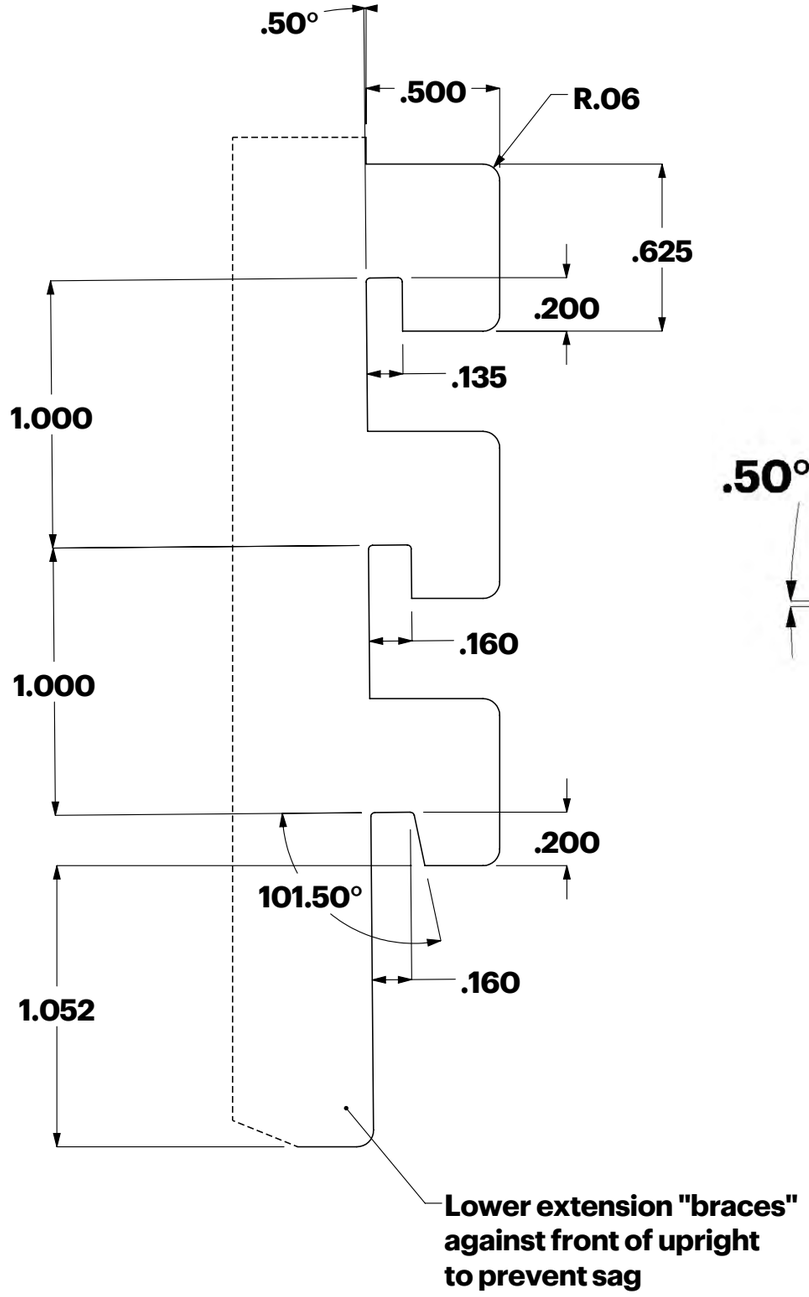

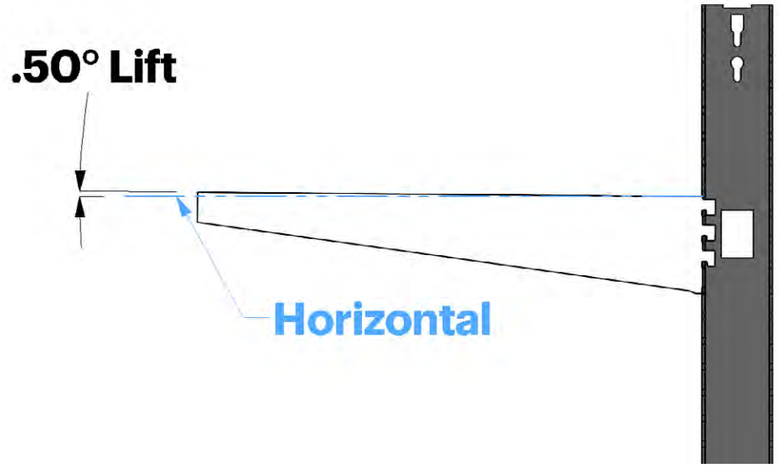

Last Updated August 12, 2026 8:20 AM | Best Buy partner and internal use only. Do not copy, publish, or distribute. The material in this document is confidential to Best Buy.

Locking Tooth

This secure tooth prevents the attached fixture from lifting or sliding out when upward force is applied. It features a slider tooth that is locked into the upright slot after the shelf is installed.

This tooth is primarily used when upward force is expected (demo products) and when the attached load must be secured because of seismic or weight concerns.

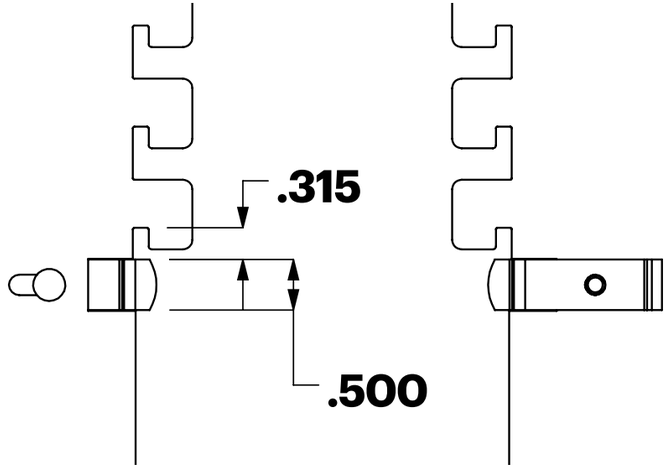

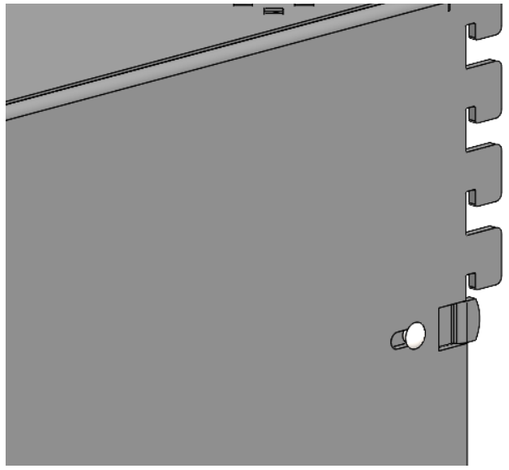

Locking tooth on heavy duty shelf with four teeth

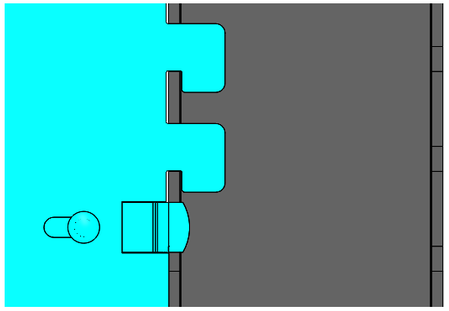

Locking tooth engaged

Last Updated August 12, 2026 8:20 AM | Best Buy partner and internal use only. Do not copy, publish, or distribute. The material in this document is confidential to Best Buy.

Small Appliance Endcaps

Fixture Overview

Small Appliance Endcaps are activated on various fixtures, each of which provides a consistent and visually appealing presentation of salable product.

- **Gondola-based**
  - — 2’ Endcap
  - — 4’ Endcap (14” base deck)
  - — 4’ Endcap (24” base deck)
  - — Half Rack
- **Table-based**
  - — Small Appliance
  - — Product
  - — Smash

If you encounter unique presentations not listed above, ask your Best Buy contact for details.

2’ Endcap Gondola



4’ Endcap Gondola (14” base deck)



4’ Endcap Gondola (24” base deck)

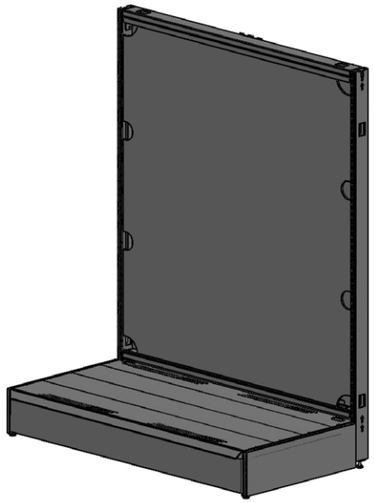

Half Rack Gondola

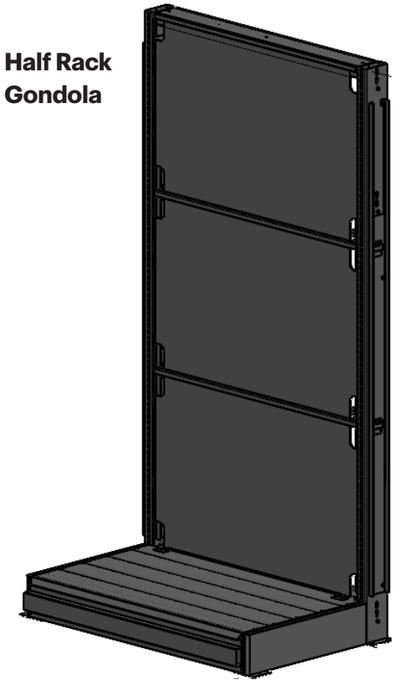

Small Appliance Table

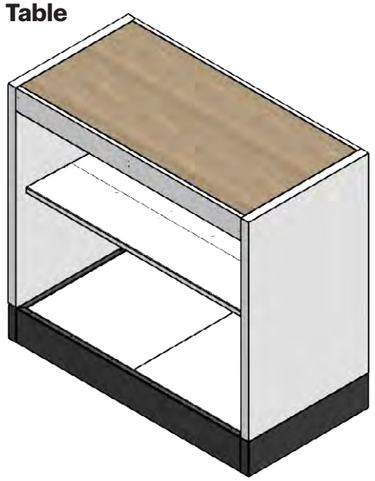

Product Table

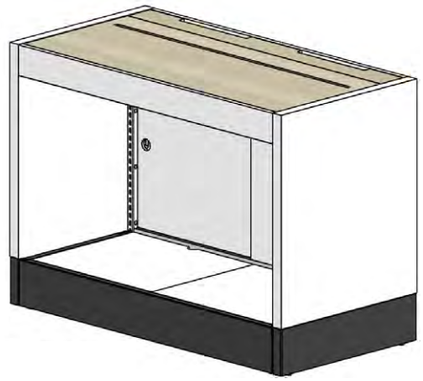

Smash Table

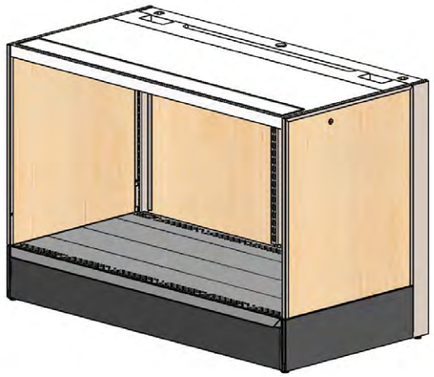

Last Updated August 12, 2026 8:20 AM | Best Buy partner and internal use only. Do not copy, publish, or distribute. The material in this document is confidential to Best Buy.

Gondola-based Fixtures

Gondola-based: **Power & Attachments**

Vendor Expectations

- Securely anchor the display to either the shelf or slotted uprights. *(See Best Buy's perforated shelves at right).* See the Lowbay Gondola Endcap guidelines for information on Best Buy kit components.
- Remove any batteries from the product before displaying.
- Connect all power to a power strip that is directly connected to a power receptacle. Power strips cannot be daisy-chained.
- Secure demo product using approved tethers, recoilers, mechanical fasteners or security devices.
- Purchase electronic security devices from the approved vendors noted in the Technology Design Standards.
- Neatly organize or hide additional power cords, plugs, etc. to avoid clutter and cord drape.

You will need details and dimensions in these guides on Partner Portal:

Lowbay Gondola Endcap

Technology Design Standards

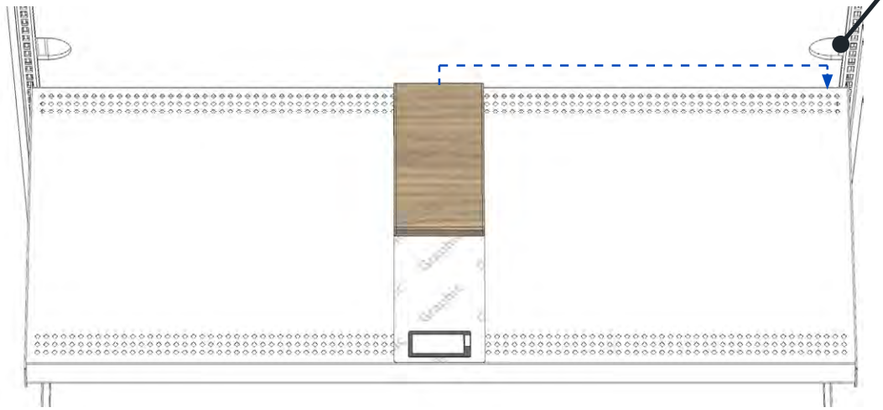

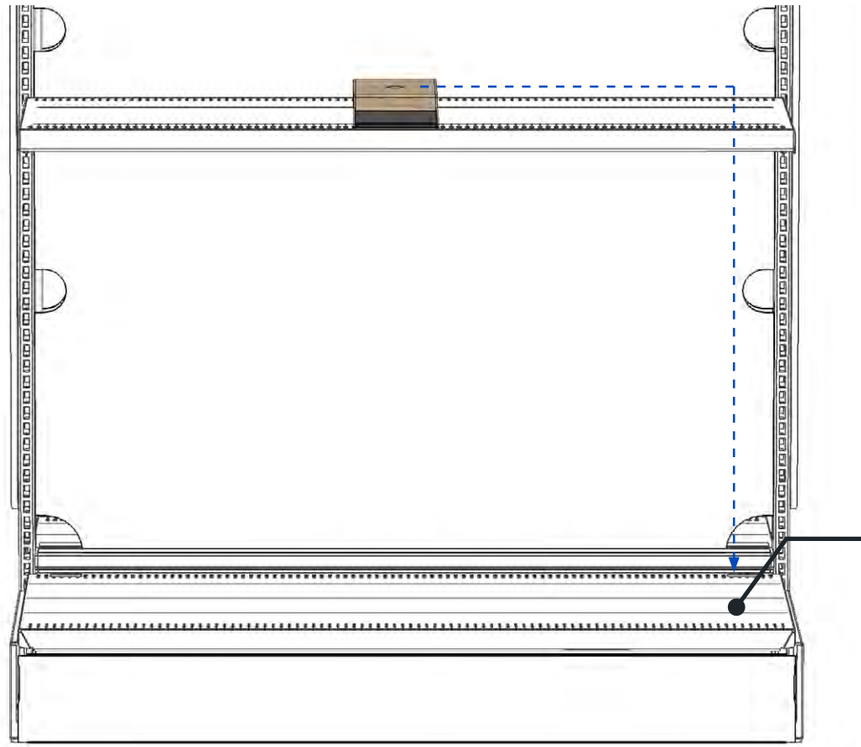

Shelf Anchoring

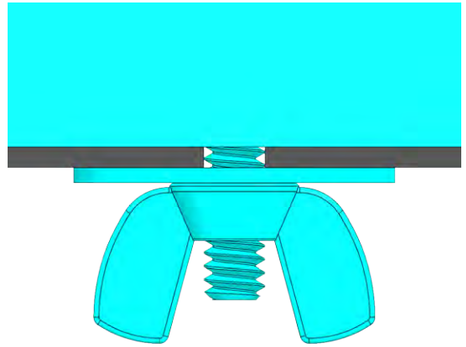

Last Updated August 12, 2026 8:20 AM | Best Buy partner and internal use only. Do not copy, publish, or distribute. The material in this document is confidential to Best Buy.

Gondola-based: **Merchandising**

Vendor Expectations

- Include your choice of Demo, Display or Dead Mock Display product(s).
  - — **Demo:** An out-of-box product feature that allows for an interactive experience.
  - — **Display:** A non-interactive product included to showcase materiality, form factor, colorways and sizing.
  - — **Dead Mock Display:** A non-interactive 3D model of salable product intended to showcase form factor, colorways and sizing.

Note: *Printed stand-ins of products are not permitted.*

- Display all products and VPP components within the volumetric space permitted (shown at right). ***Note:*** *Base decks in CAD titles are named 14” and 24” rather than their precise measurements shown.*

2’ Endcap Gondola

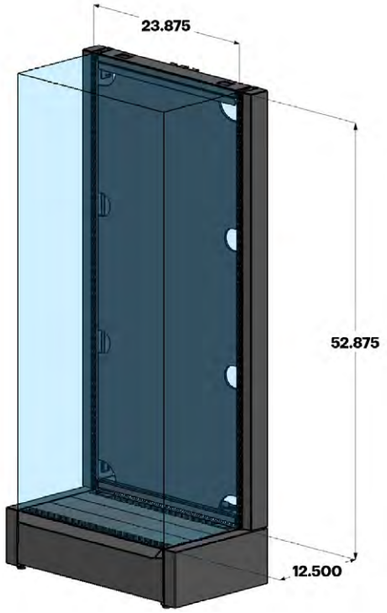

4’ Endcap Gondola
(14” base deck)

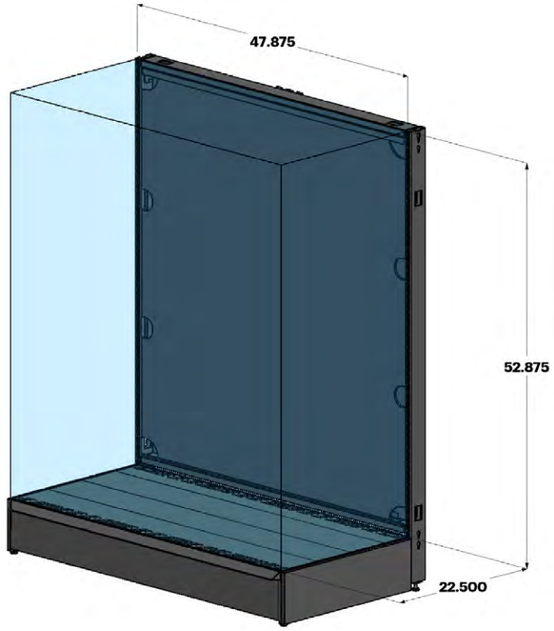

4’ Endcap Gondola
(24” base deck)

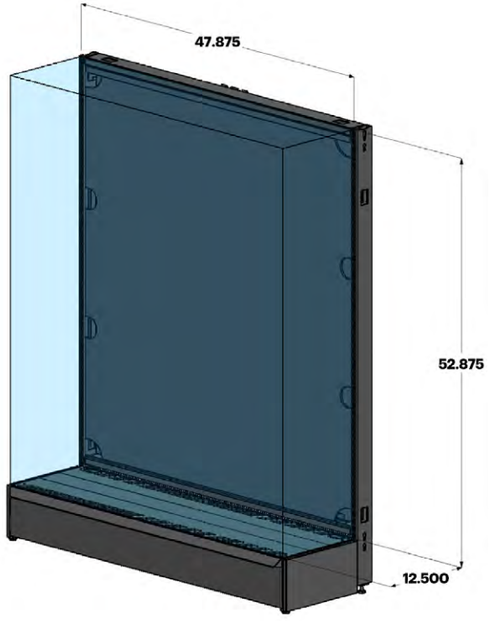

Half Rack Gondola

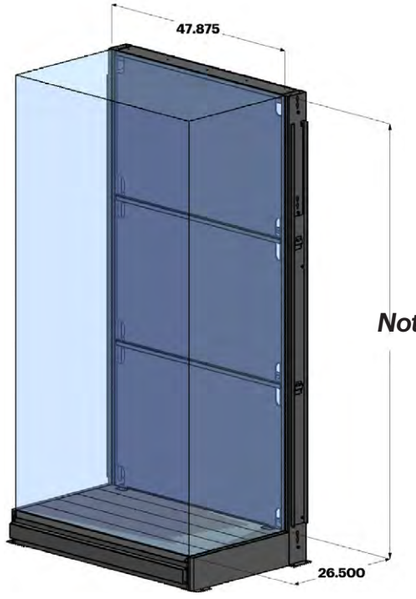

Note: *Half Rack heights vary. Ask your Best Buy contact for details.*

Last Updated August 12, 2026 8:20 AM | Best Buy partner and internal use only. Do not copy, publish, or distribute. The material in this document is confidential to Best Buy.

Gondola-based: **Merchandising**

Vendor Expectations

- Follow an A/B merchandising strategy with demo/display units on top and salable units below.
- Support all products—display or salable—with a proximally located electronic shelf label (ESL).
- Follow the Technology Design Standards for all buttons, interactive elements, and audio and video components.
- Ensure interactive elements and product demos follow ADA reach guidelines.
- Use permitted lighting only. Illumination from products or monitors is allowed. Backlighting, downlighting and under-cabinet lighting are not allowed.

Note: *Consider creating your endcap with Small Appliance platform systems to allow for an easy transition to an inline presentation if needed. Ask your Best Buy contact for details.*

You will need details and dimensions in these guides on Partner Portal:

Architecture Standards

ESL Guidelines

Technology Design Standards



Last Updated August 12, 2026 8:20 AM | Best Buy partner and internal use only. Do not copy, publish, or distribute. The material in this document is confidential to Best Buy.

Gondola-based: **Graphics**

Vendor Expectations

- Create a graphics presentation that complies with all copy, design, size, substrate, etc. requirements.
- Display signage within the width, depth and height of the endcap fixture.
- Include your logo in the top 6” of your display.
- Keep copy a minimum of 20” above the ground.
- Include up to two external POP graphics on a single product VPP, ensuring POP graphics cover no more than 15% of the presentation.
- No stand-alone printed or mock food is permitted (i.e. filled coffee cups, sandwiches, etc).

Best Practices

- Prioritize the following graphics for your presentation:

  Content: Lifestyle imagery of humans interacting with products.

  Crop: Humans and products largely centered, with products clearly visible.

- Choose from the following alternate content options ***only*** if lifestyle imagery of humans and products isn’t available or allowed:

  — Lifestyle imagery of products ***without*** humans.

  — Hero product imagery on a neutral color field.



You will need details and dimensions in these guides on Partner Portal:

Copy & Claims Guidelines

Small Appliance POP

Last Updated August 12, 2026 8:20 AM | Best Buy partner and internal use only. Do not copy, publish, or distribute. The material in this document is confidential to Best Buy.

Table-based Fixtures

Table-based: **Power & Attachments**

Vendor Expectations

- Securely anchor the display to the table through the surface slot. *(The full panel lifts out for easier access).* See the Lowbay Gondola Endcap guidelines for information on Best Buy kit components.
- Remove any batteries from the product before displaying.
- Connect all power to a power strip that is directly connected to a power receptacle. Power strips cannot be daisy-chained.
- Secure demo product using approved tethers, recoilers, mechanical fasteners or security devices.
- Purchase electronic security devices from the approved vendors noted in the Technology Design Standards.
- Neatly organize or hide additional power cords, plugs, etc. to avoid clutter and cord drape.

You will need details and dimensions in these guides on Partner Portal:

Lowbay Gondola Endcap

Technology Design Standards

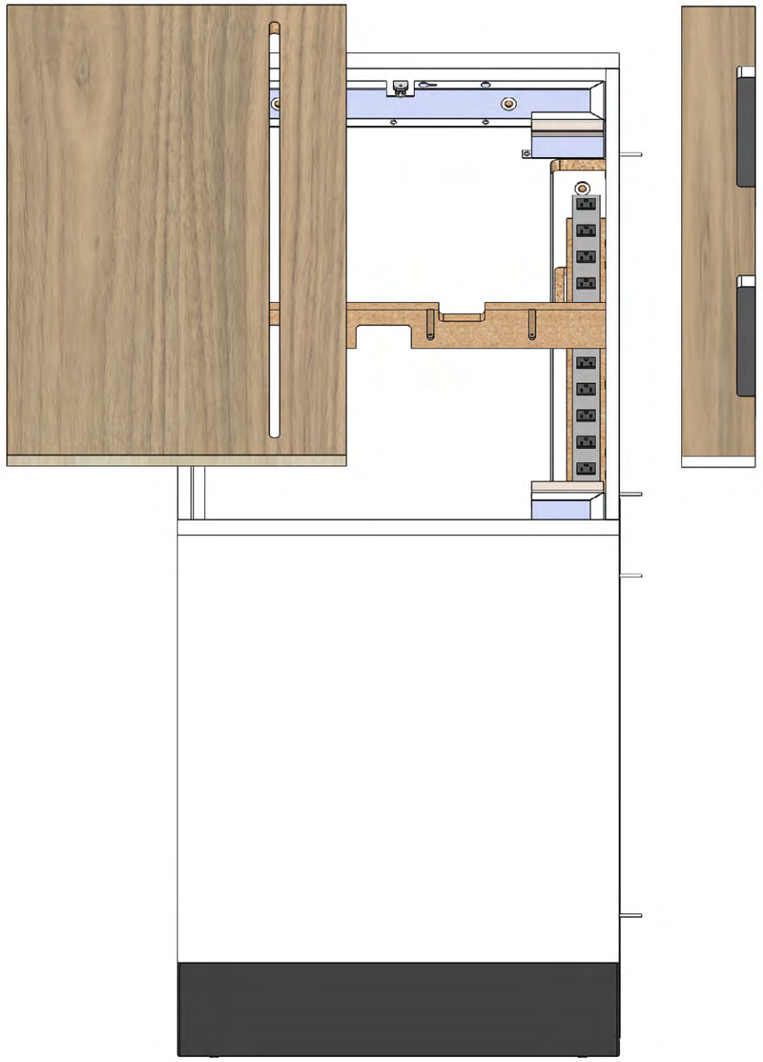

Last Updated August 12, 2026 8:20 AM | Best Buy partner and internal use only. Do not copy, publish, or distribute. The material in this document is confidential to Best Buy.

Table-based: **Merchandising**

Vendor Expectations

- The maximum available merchandisable space measures 44” W x. 22.4” D.
- Include your choice of Demo, Display or Dead Mock Display product(s).
  - — **Demo:** An out-of-box product feature that allows for an interactive experience.
  - — **Display:** A non-interactive product included to showcase materiality, form factor, colorways and sizing.
  - — **Dead Mock Display:** A non-interactive 3D model of salable product intended to showcase form factor, colorways and sizing.

Note: *Printed stand-ins of products are not permitted.*

- Display all products and VPP components within the volumetric space permitted (shown at right).
  - — Vendor presentation must be flush with the top of the table, not overhanging the white border.
  - — Removal of fixture counter top is not allowed.
  - — Product cannot obstruct the view of logo header.
  - — Framing is not permitted on the fixture exterior.

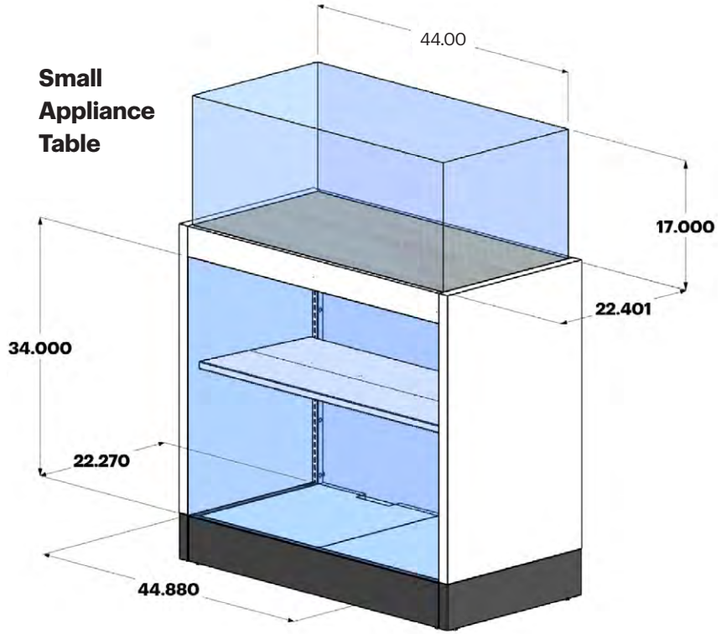

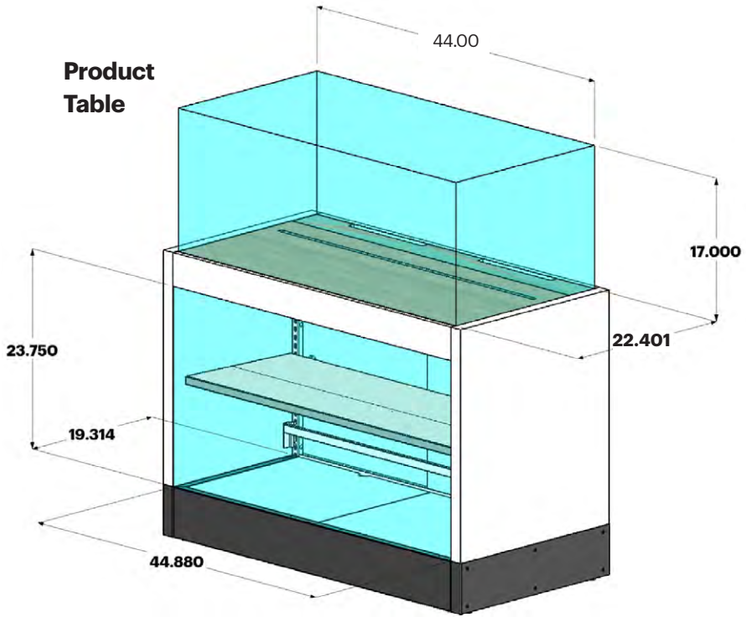

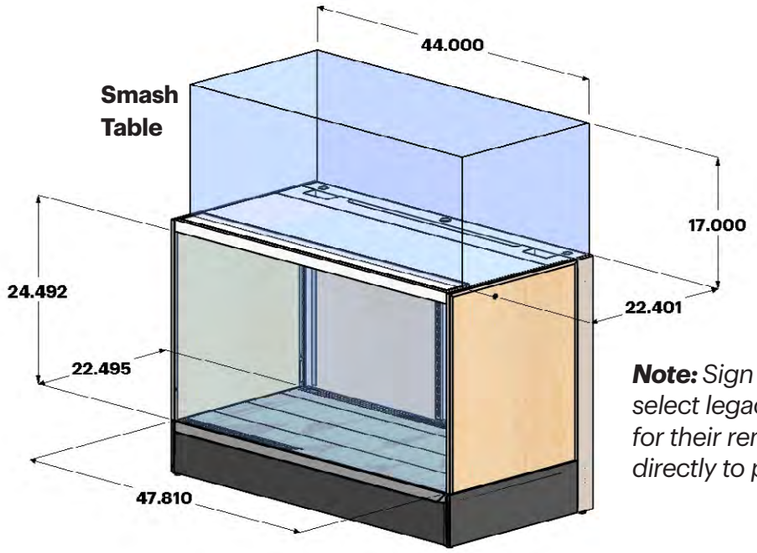

44.00

Note: *Sign holder frames might be available on select legacy Smash Tables, but vendors should plan for their removal. All graphic backers should attached directly to product presentations.*

Last Updated August 12, 2026 8:20 AM | Best Buy partner and internal use only. Do not copy, publish, or distribute. The material in this document is confidential to Best Buy.

Table-based: **Merchandising**

Vendor Expectations

- Ensure interactive elements and product demos follow ADA reach guidelines.
- Use permitted lighting only. Illumination from products or monitors is allowed. Backlighting, downlighting and under-cabinet lighting are not allowed.
- Support all products—display or salable—with a proximally located electronic shelf label (ESL).
- Receive design approval prior to prototyping your presentation. Ask your Best Buy contact for details.

Note: *Consider creating your endcap with Small Appliance platform systems to allow for an easy transition to an inline presentation if needed. Ask your Best Buy contact for details.*

You will need details and dimensions in these guides on Partner Portal:

Architecture Standards

ESL Guidelines

Technology Design Standards

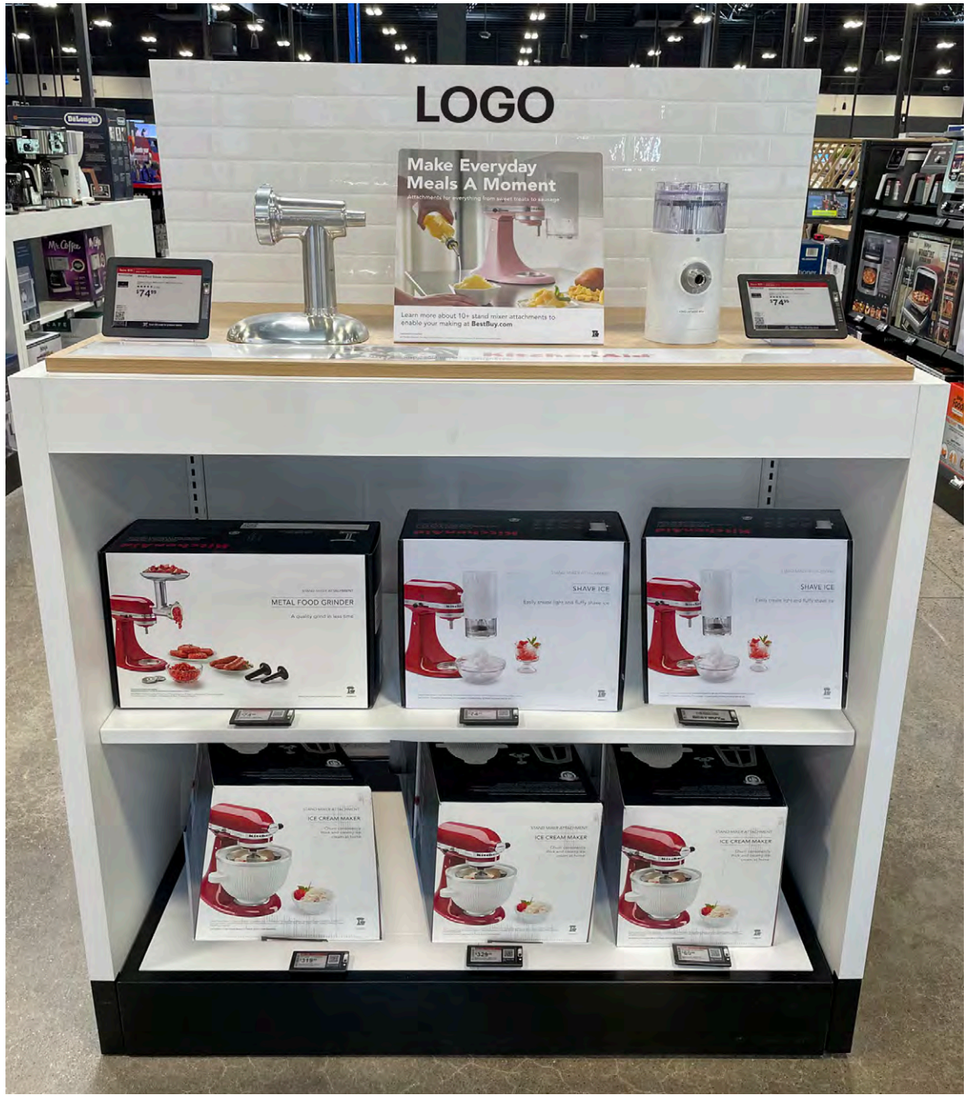

Last Updated August 12, 2026 8:20 AM | Best Buy partner and internal use only. Do not copy, publish, or distribute. The material in this document is confidential to Best Buy.

Table-based:
Small Appliance & Product Table Graphics

Vendor Expectations

- Create a graphics presentation that complies with all copy, design, size, substrate, etc. requirements.

  Note: *Backer graphics are permitted but must be physically secured to your presentation. They cannot be secured to the table fixture.*

- Include your logo in the top 6” of your display.
- Keep copy a minimum of 20” above the ground.
- Include up to two external POP graphics on a single product VPP, covering no more than 15% of the product.
- No stand-alone printed or mock food is permitted (i.e. filled coffee cups, sandwiches, etc).

Best Practices

- Prioritize the following graphics for your presentation:

  Content: Lifestyle imagery of humans interacting with products.

  Crop: Humans and products largely centered, with products clearly visible.

- Choose from these alternate options ***only*** if lifestyle imagery of humans/products isn’t available or allowed:

  — Lifestyle imagery of products ***without*** humans.

  — Hero product imagery on a neutral color field.

Note: *Sign holder frames might be available on select legacy Smash Tables, but vendors should plan for their removal. All graphic backers should attached directly to product presentations.*



You will need details and dimensions in these guides on Partner Portal:

Copy & Claims Guidelines

Technology Design Standards

Last Updated August 12, 2026 8:20 AM | Best Buy partner and internal use only. Do not copy, publish, or distribute. The material in this document is confidential to Best Buy.

Next Steps

1 READ

the following from Partner Portal for details and dimensions **you will need**:

Small Appliance POP | **Technology Design Standards**

Lowbay Gondola Endcap | **Architecture Standards**

Additional useful guides:

ESL Guidelines | **Copy & Claims Guidelines**

2 REQUEST

from your Best Buy contact:

- Drawings and models of parts you want to order. Provide the CAD reference number for your fixture and specify Solidworks or STEP file type.

CAD Title	CAD Reference #
2’ Endcap with 14” Base Deck	R0017
4’ Endcap with 14” Base Deck	R0006
4’ Endcap with 24” Base Deck	R0007
Half Rack	1012965
Product Table	1016946
Smash Table	1010154
Small Appliance Table	1016400

Last Updated August 12, 2026 8:20 AM | Best Buy partner and internal use only. Do not copy, publish, or distribute. The material in this document is confidential to Best Buy.

Small Appliance POP Graphics

Overview

POP graphics give you the opportunity to educate customers on a product's features and differentiators.

Vendor Expectations

- Include up to two external POP graphics on a single product VPP.
- Place POP graphics on sleds/platforms or product sides to prioritize visibility of the display's size, materiality and finishes.

Note: *No stand-alone printed or mock food is permitted (i.e. filled coffee cups, sandwiches, etc.).*

External POP Graphic

Note: *A single product VPP can contain no more than two external POP graphics.*



External POP Graphic

Note: *No stand-alone printed or mock food is permitted. Food imagery* ***is permitted*** *as part of POP graphics, details or sled.*



Last Updated August 12, 2026 8:20 AM | Best Buy partner and internal use only. Do not copy, publish, or distribute. The material in this document is confidential to Best Buy.

Graphics

Vendor Expectations

- Include up to two external POP graphics on a single product VPP.
- Follow Best Buy's Copy & Claims Guidelines (see below).
- Ensure product remains the hero of the presentation and POP graphics cover no more than 15% of the entire display.
- Display overlay clings, if desired, on any screens and/or buttons to simulate a "powered" experience.
- Include POP graphics as desired on the product interior, ensuring graphics are not visible until the product is opened.

You will need details found in this guide on Partner Portal:

Copy & Claims Guidelines

Overlay Cling

Note: *Clings may cover but not overhang screens or buttons.*



External POP Graphic

Note: *Ensure that POP graphics cover no more than 15% of the display.*

Last Updated August 12, 2026 8:20 AM | Best Buy partner and internal use only. Do not copy, publish, or distribute. The material in this document is confidential to Best Buy.

Theater District

Overview

The Theater District invites vendors to showcase disruptive and immersive experiences near the race track.

Each vendor presentation or “position” can activate on Side Stock Endcaps and/or Wall Fixtures.

To encourage newness and drive continued customer engagement, vendors will occupy positions for approximately 18 months.

Best Buy-Managed Components
- Framework Side Stock Endcaps and Wall Fixtures (fixtures detailed in the following pages)
- Hang bars and peg hooks
- Electronic shelf labels (ESLs)

Vendor-Managed Components
- Logo headers
- Required templated graphics
- Standard gondola shelves
- Demo, Display and Deadmock Display products
- Custom fixturing elements
- Supporting graphics as desired

**Drawings and models of all parts available upon request.*



Last Updated August 12, 2026 8:20 AM | Best Buy partner and internal use only. Do not copy, publish, or distribute. The material in this document is confidential to Best Buy.

Configuration Overview

Position	Small	Medium (2 Vendors)	Large	X-Large
Description	Single Side Stock Endcap display	Side-by-side 4’ Wall Fixture displays + brand header	8’ Wall Fixture display + brand header	8’ Wall Fixture display + brand header + back-to-back Side Stock Table displays
				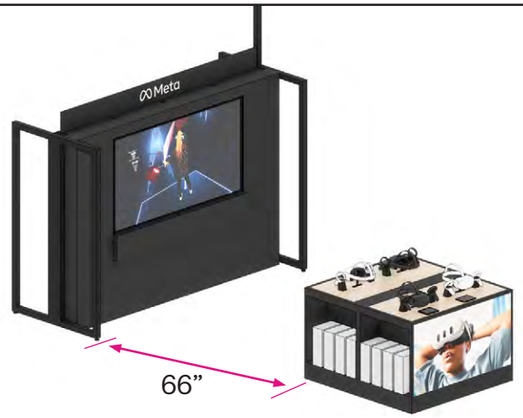
Space	21” H x 45.250” W x 23” D	67” H x 48” W x 18” D	67” H x 96” W x 18” D	67” H x 96” W x 18” D (Wall) + 21” H x 45.250” W x 28.25” D (x2) (Side Stock)
Footprint	60” H x 48” W x 26” D	67” H x 48” W x 18” D	67” H x 96” W x 18” D	67” H x 96” W x 18” D (Wall) + 60” H x 48” W x 56.5” D (Side Stock)
	Dimensions for graphics and fixtures are approximate, detailed information provided later in this document.			

Last Updated August 12, 2026 8:20 AM | Best Buy partner and internal use only. Do not copy, publish, or distribute. The material in this document is confidential to Best Buy.

Placement & Adjacencies

Requirements

- The Theater District is placed along the racetrack with clear sightlines to the fixtures.
- Theater District merchandising programs are not expected to be thematically relevant to adjacent departments.

Best Practices

- Where possible, complementary vendor programs should be placed together within the Theater District fixtures, especially when vendors activate only half of the Wall Fixture or a single side of a Side Stock Endcap (Small and Medium Positions.)
- —Example: iRobot vacuums and Whisker Litter Robots (same product category) or Nintendo Switch and Lego (same customer-type).

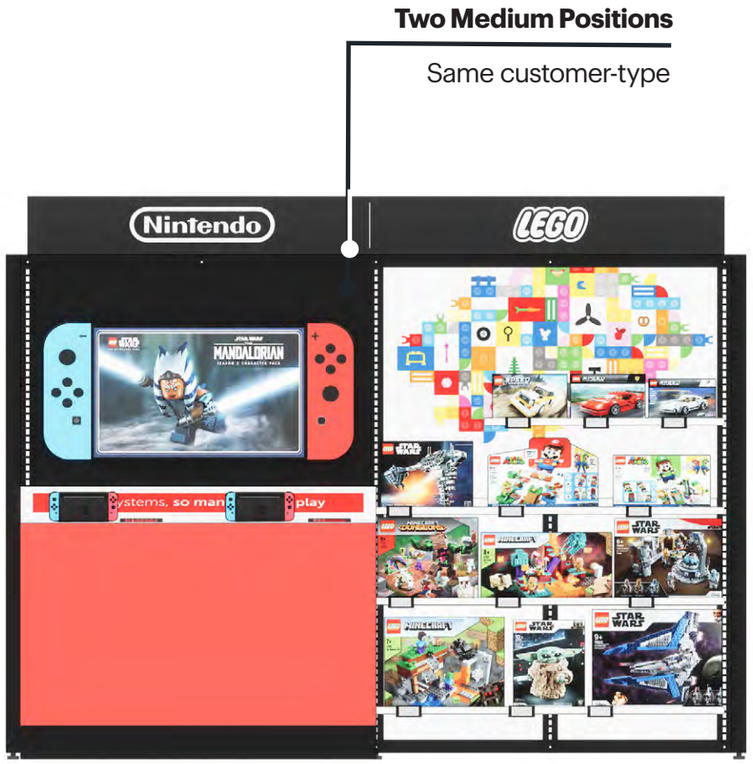

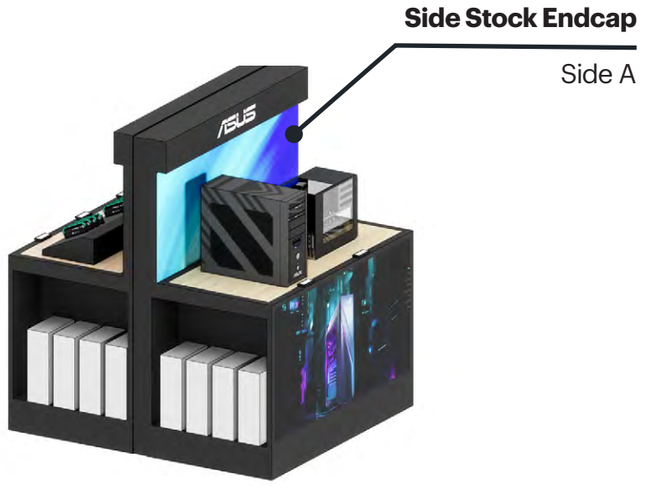



Last Updated August 12, 2026 8:20 AM | Best Buy partner and internal use only. Do not copy, publish, or distribute. The material in this document is confidential to Best Buy.

Theater District
Side Stock Endcap
Vendor Guidelines

© 2024 BEST BUY. ALL RIGHTS RESERVED.

Side Stock Endcap

The Side Stock Endcap creates a consistent, display-centric presentation that visually minimizes salable product stock.

Unlike other Best Buy endcaps, tight guidelines are in place for Side Stock Endcaps. The outcome is a more flexible, transactional fixture that allows cost effective design solutions and easy installation and removal.

Best Buy-Managed Components
- Core fixture elements
- Pricing ESLs

Vendor-Managed Components
- Any product featured as display or demo on the top wood surface
- Platforms, security, data and power attachments needed for display or demo products on top wood surface
- Magnetic graphics for top and bottom panels..
- Printed logo Header

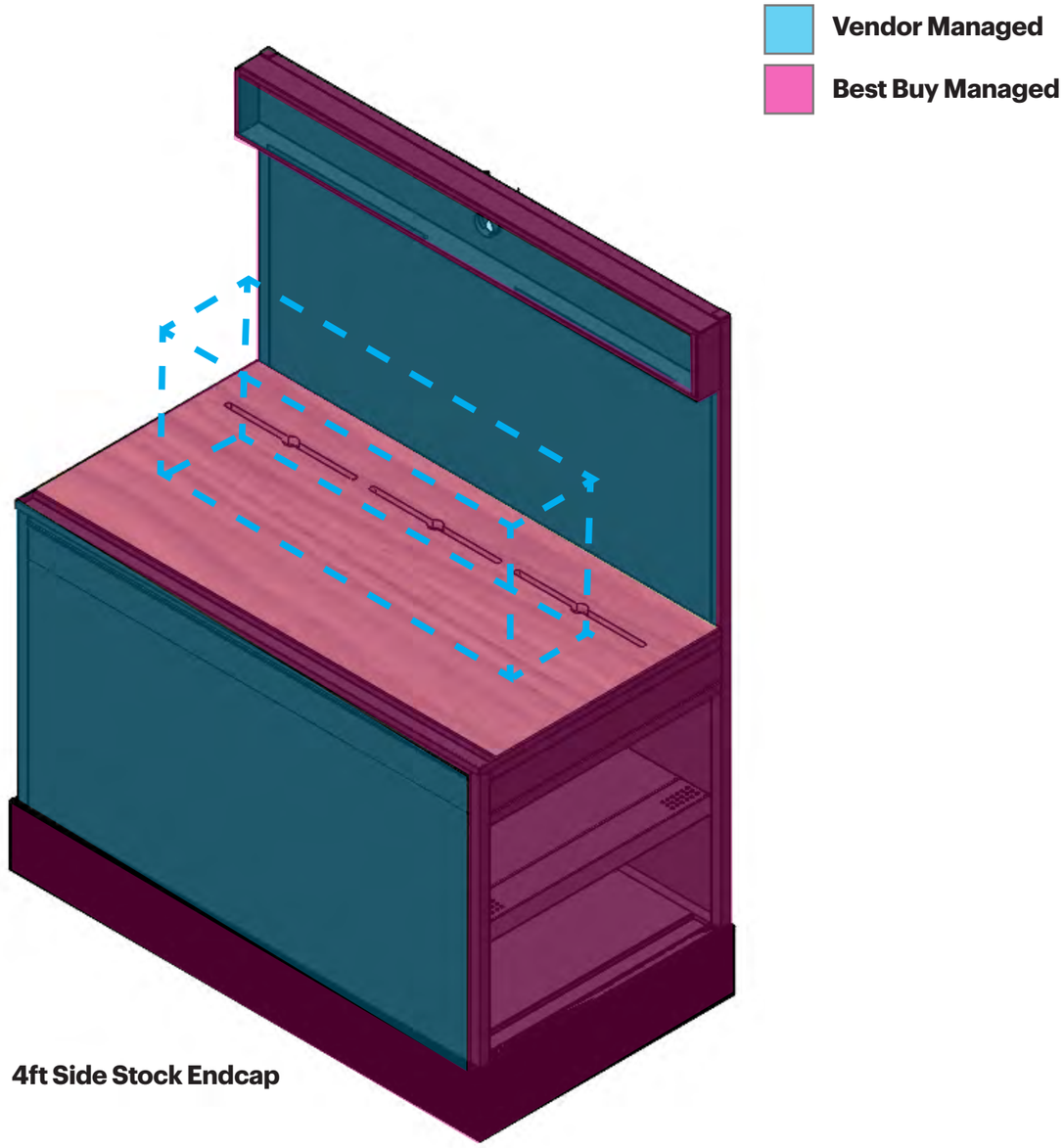

4ft Side Stock Endcap

**Drawings and models of all parts available upon request.*

Last Updated August 12, 2026 8:20 AM | Best Buy partner and internal use only. Do not copy, publish, or distribute. The material in this document is confidential to Best Buy.

Overall Dimensions

*Dimensions are for reference only.

Drawings and models of all parts available upon request.

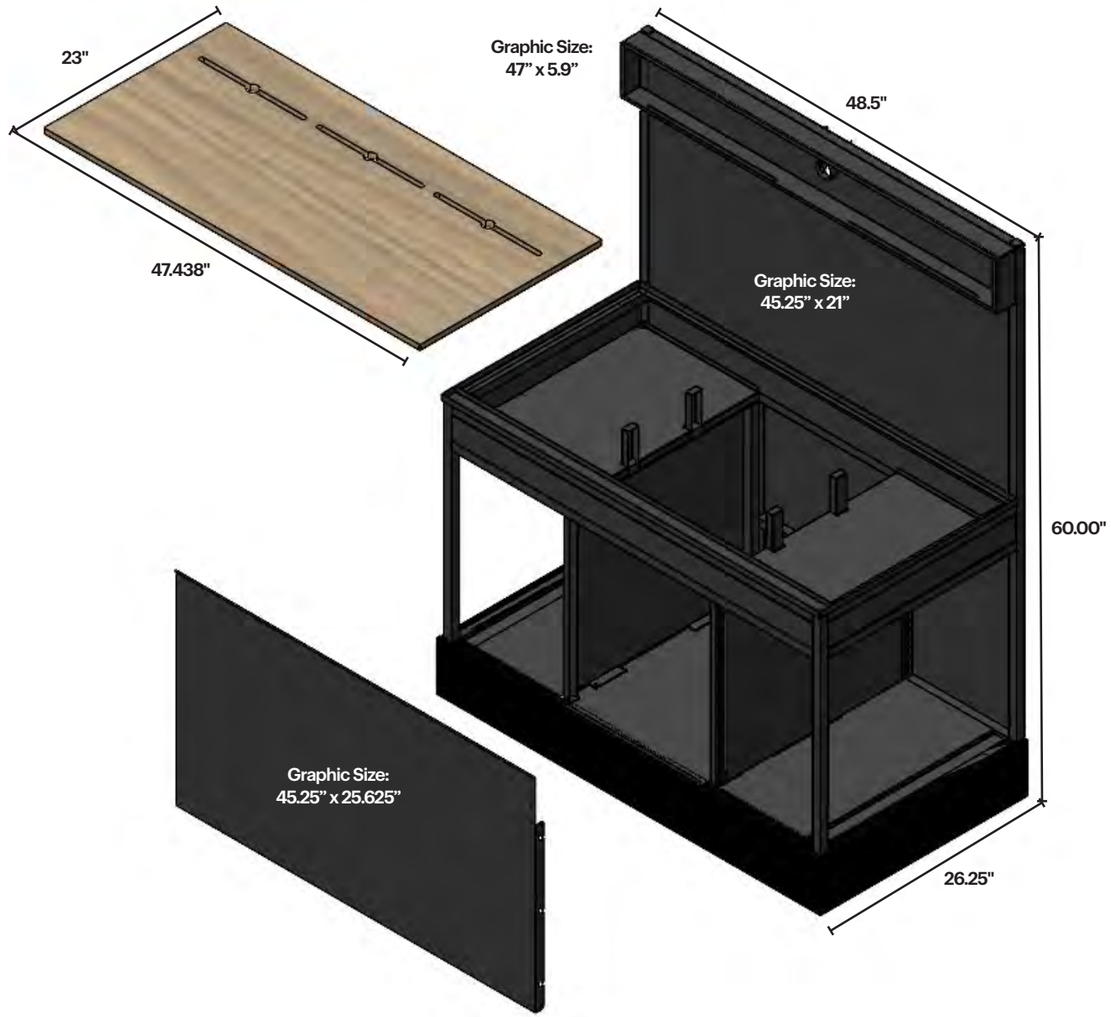

Last Updated August 12, 2026 8:20 AM | Best Buy partner and internal use only. Do not copy, publish, or distribute. The material in this document is confidential to Best Buy.

4ft Endcap Top Wood Surfaces Detailed Dimensions

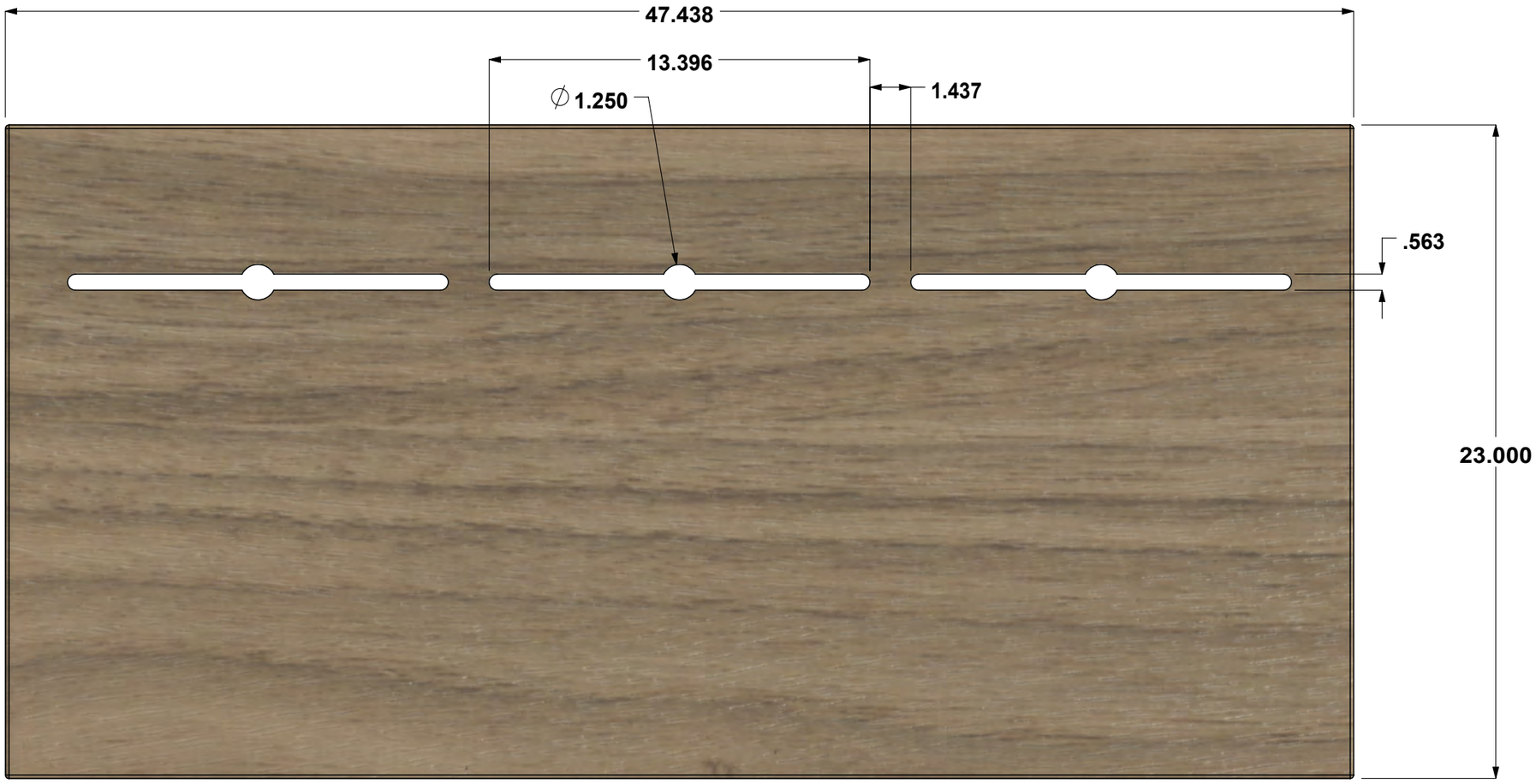

Drawings and models of all parts available upon request.

*Dimensions are for reference only.

Last Updated August 12, 2026 8:20 AM | Best Buy partner and internal use only. Do not copy, publish, or distribute. The material in this document is confidential to Best Buy.

Side Stock Table

The spine of back-to-back Side Stock Endcaps can be removed to create a larger table presentation. This allows for display space for larger displays while still visually minimizing salable product stock. The Side Stock Table is only a fixture option presented to vendors with XL positions.

Tight guidelines are in place for Side Stock Tables. The outcome is a more flexible, transactional fixture that allows cost effective design solutions and easy installation and removal.

Best Buy-Managed Components
- Core fixture elements
- Pricing ESLs

Vendor-Managed Components
- Any product featured as display or demo on the top wood surface
- Platforms, security, data and power attachments needed for display or demo products on top wood surface
- Magnetic graphics for the bottom panels



**Drawings and models of all parts available upon request.*

Last Updated August 12, 2026 8:20 AM | Best Buy partner and internal use only. Do not copy, publish, or distribute. The material in this document is confidential to Best Buy.

Table Top Wood Surface Detailed Dimensions

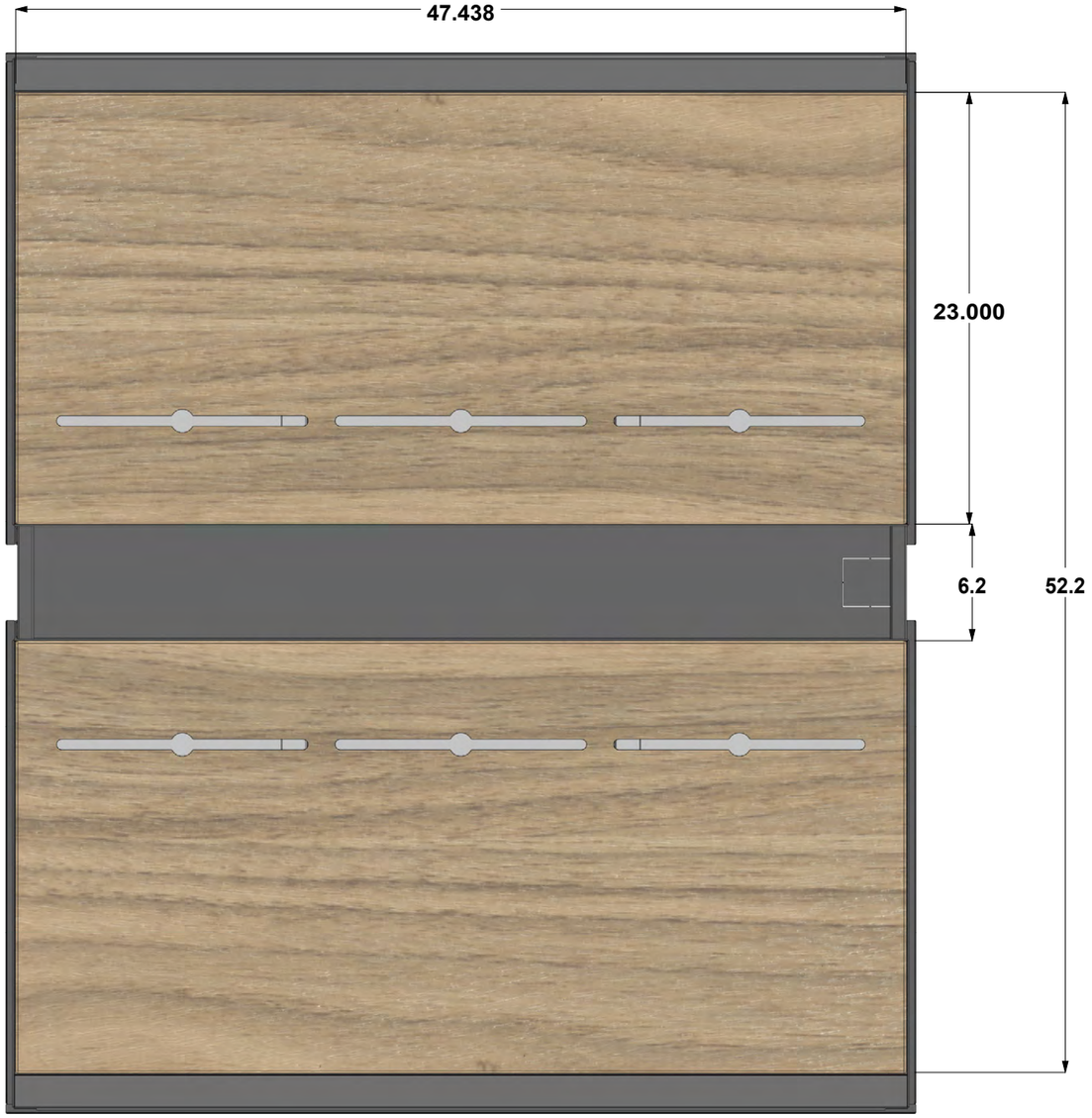

*Dimensions are for reference only.

Last Updated August 12, 2026 8:20 AM | Best Buy partner and internal use only. Do not copy, publish, or distribute. The material in this document is confidential to Best Buy.

Security, Attachments and Power

- Switched power would be approximately .8 amps per display position and continuous power would be taken from wall breakout which equates to a little over 2 amps per display position
- Utilize the center slot for mounting larger/heavier displays to the Top Wood Surface
- The center slot is fully accessible through the removable Bottom Magnetic Panel for attaching the washers and wing nuts
- Presentations can utilize any or all three slots.
- The Top Wood Surface can be lifted off the endcap to allow access for display installation and before resetting back in place
- The Top wood Surface can be spun around, making the attachment slots at the front of the table, depending on presentation need



Center slot for mounting larger/heavier displays

Smaller fixtures can utilize any or all three slots

Preferred attachment hardware

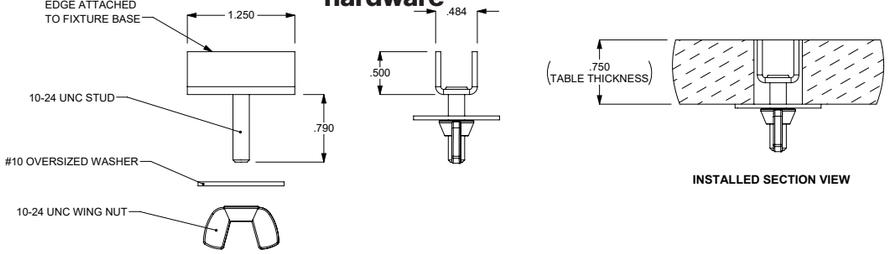



The center slot is fully accessible through the Bottom Magnetic Panel for attaching the washers and wing nuts

**Drawings and models of all parts available upon request.*

Last Updated August 12, 2026 8:20 AM | Best Buy partner and internal use only. Do not copy, publish, or distribute. The material in this document is confidential to Best Buy.

Security, Attachments and Power

- Security cables and product platforms can attach to the fixture and be snaked through cutout on the back of the top wood surface
- The provided top wood surface should be leveraged as the main display backdrop for product presentations. It can be covered by a vendor-supplied surface as a less-preferred alternative.
- If top wood surface is damaged or altered in any way, vendors are responsible for replacing it upon vacating space
- Front panels are removable to provide easy access to fixture interiors
- Power can be accessed through mouse holes in the back and bottom of the fixture

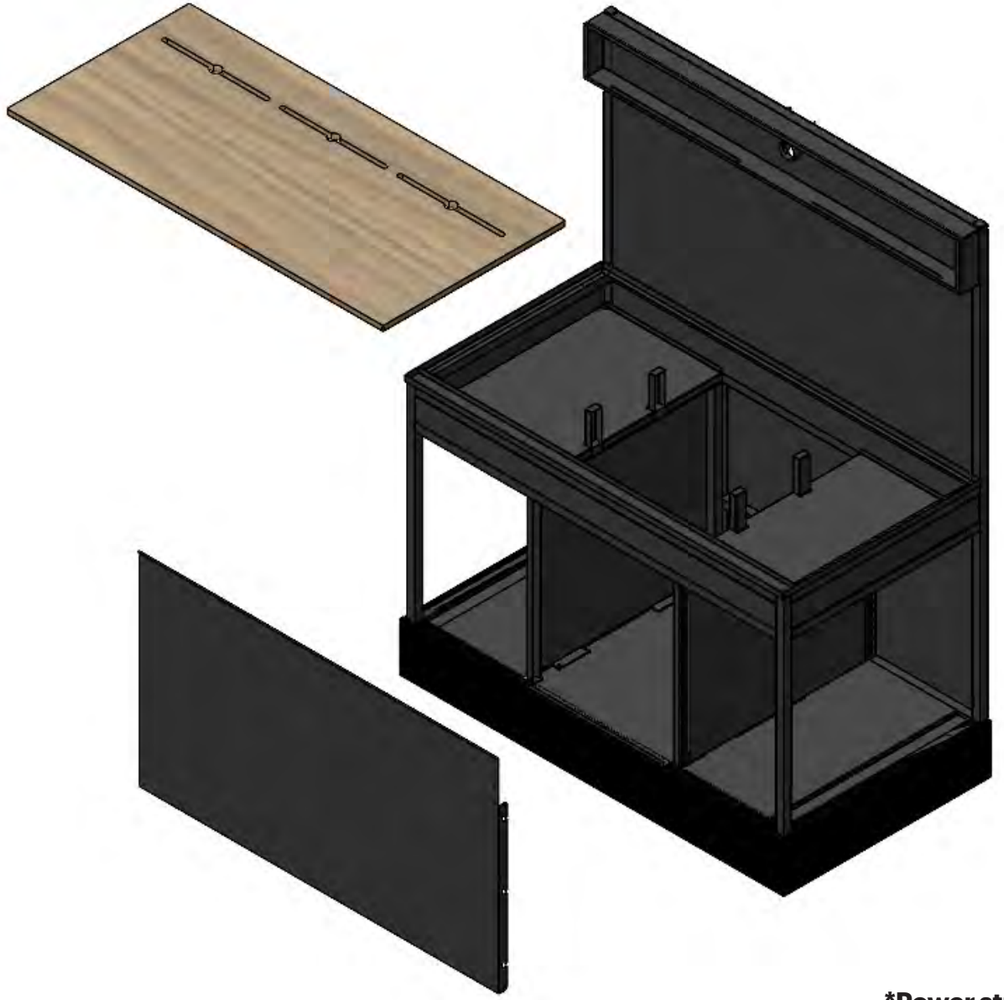

***Power strip is provided in both endcaps**

**Drawings and models of all parts available upon request.*

Last Updated August 12, 2026 8:20 AM | Best Buy partner and internal use only. Do not copy, publish, or distribute. The material in this document is confidential to Best Buy.

Endcap Graphics

Requirements

- Header must follow template and material specifications exactly, and include only a white vendor logo (max 2.88” high) printed directly on the black substrate
- Graphics on the magnetic panels should be visually uncluttered and not distract from the products on display
- Copy and logos are not permitted on the bottom magnetic panel
- Additional graphics and educational touchpoints can be added, but not cover more than 25% of the top wood surface

Best Practices

- The Side Stock Endcaps are intended for a concise product display providing “at a glance” engagement and understanding
- Keep product education simple and brief

Find more details and dimensions in these guides on Partner Portal:

Copy & Claims Guidelines

Graphic Activation Areas

1. Header
2. Top Magnetic Panel
3. Top Wood Surface
4. ESL Channel
5. Bottom Magnetic Panel
6. Salable Merchandising Area

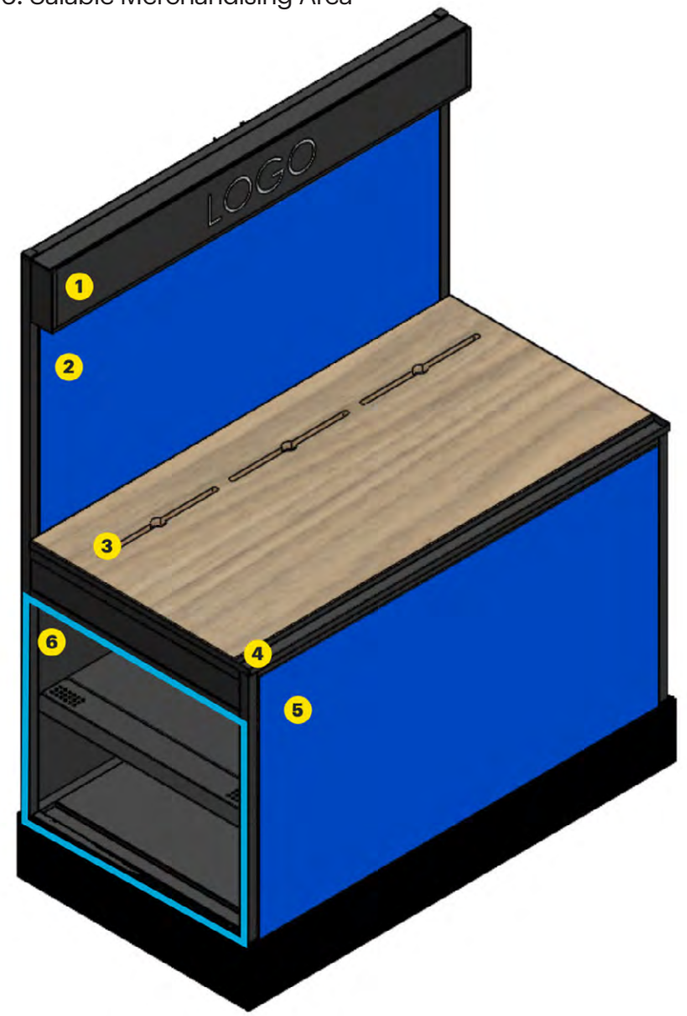

Print and substrate Information:

Dieline name: “Dieline_4ft_Header_47x5.9”
Size: 47 (w) x 5.9 (h)
Substrate: .1875 Ultraboard, Black/Black/Black

Dieline name: “Dieline_4ft_TopBacker_45.250x21”
Size: 45.250 (w) x 21 (h)
Substrate: 20mil Magnetic Vinyl, White

Dieline name: “Dieline_4ft_BaseFront_45.250x25.625”
Size: 45.25 (w) x 25.625 (h)
Substrate: 20mil Magnetic Vinyl, White

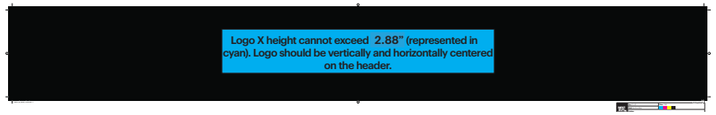

Dieline_4ft_Header_47x5.9

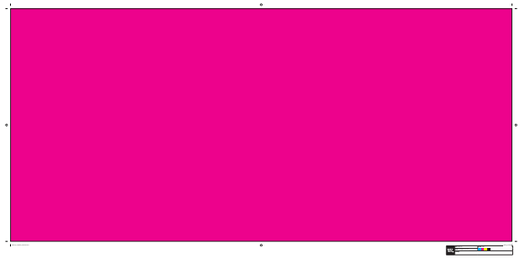

Dieline_4ft_TopBacker_45.250x21

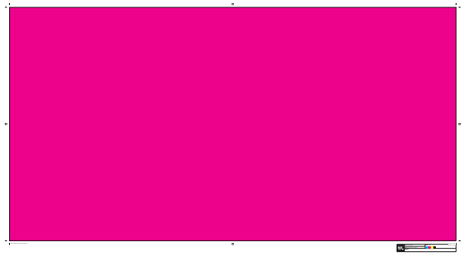

Dieline_4ft_BaseFront_45.250x25.625

Last Updated August 12, 2026 8:20 AM | Best Buy partner and internal use only. Do not copy, publish, or distribute. The material in this document is confidential to Best Buy.

Table Graphics

Requirements

- Graphics on the magnetic panels should be visually uncluttered and not distract from the products on display
- Copy and logos are not permitted on the bottom magnetic panel
- Additional graphics and educational touchpoints can be added, but not cover more than 25% of the top wood surface

Best Practices

- The Side Stock Tables are intended for a concise product display providing “at a glance” engagement and understanding
- Keep product education simple and brief

Graphic Activation Areas

1. Top Wood Surfaces
2. ESL Channels
3. Bottom Magnetic Panels

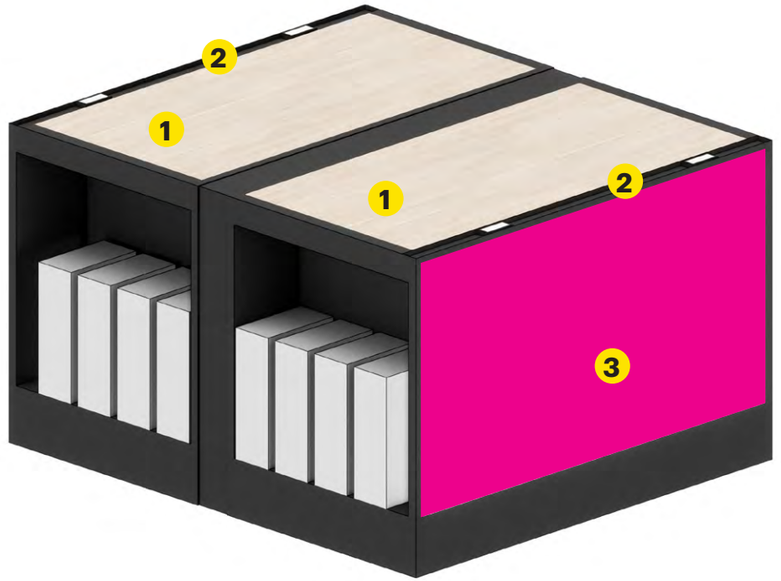

Print and substrate Information:

Dieline name: “Dieline_4ft_BaseFront_45.250x25.625”
Size: 45.25 (w) x 25.625 (h)
Substrate: 20mil Magnetic Vinyl, White

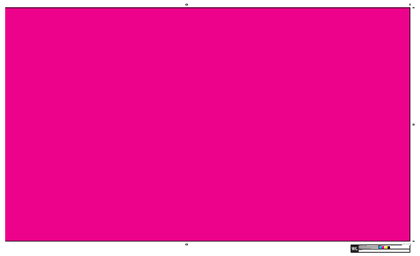

Dieline_4ft_BaseFront_45.250x25.625

Find more details and dimensions in these guides on Partner Portal:

Copy & Claims Guidelines

Last Updated August 12, 2026 8:20 AM | Best Buy partner and internal use only. Do not copy, publish, or distribute. The material in this document is confidential to Best Buy.

Graphics — Product Fulfillment

With little to no salable stock available for customers within the Theater District, it is essential that they understand how to shop products in this space.

Best Buy will provide and planogram “Scan. Learn. Buy.” signage (shown at right). In addition to these pieces, vendors ***must supplement with their own fulfillment messaging***.

Vendor Requirements

- Include in your collateral a directive for product fulfillment.
  - — Examples:
    Scan price tag QR codes to:
    · Get product info
    · Check availability
    · Get expert help
    · Send to Order Pickup

Scan price tag QR codes to send to Order Pickup.



Peg label ESL (attached on top)

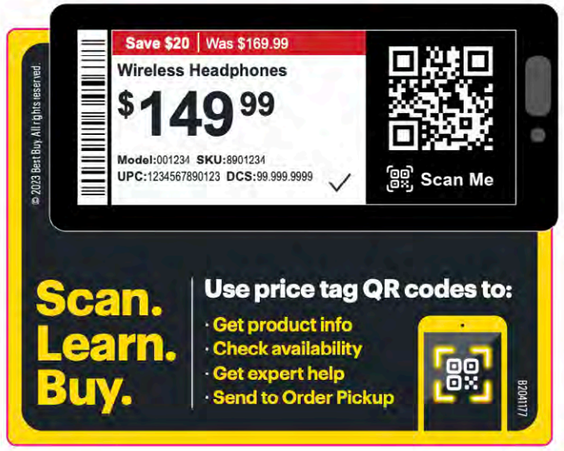

Peg label ESL (attached on bottom)

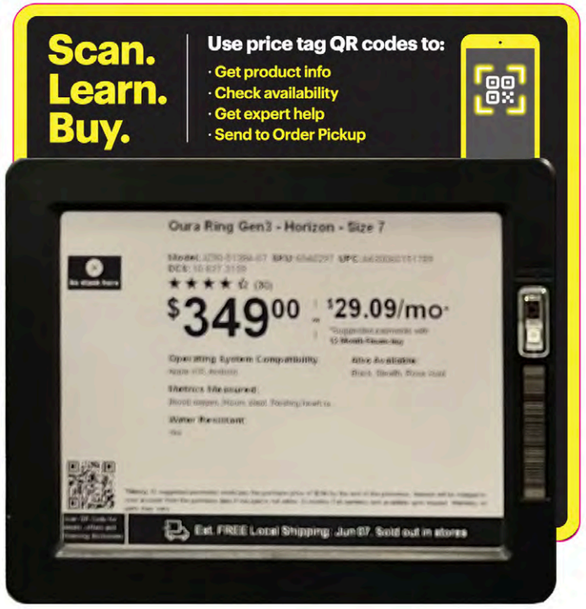

Fact tag ESL

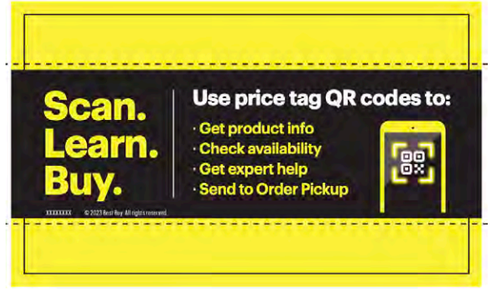

Channel insert

Last Updated August 12, 2026 8:20 AM | Best Buy partner and internal use only. Do not copy, publish, or distribute. The material in this document is confidential to Best Buy.

Endcap Merchandising

Requirements

- All presentations require Demo, Display or Dead Mock Display product(s) to be included
- All interactive elements must meet accessibility standards
- Display/demo products on top wood surface need to be secured leveraging platforms, cables or mounts
- Products may not extend above logo header panel or beyond the sides of the fixture
- Logo on header should not be visually obstructed by products
- Additional graphics and educational touchpoints can be added, but not cover more than 25% of the top wood surface
- Every display or salable SKU needs a Peg Label a or Fact Tag ESL

Best Practices

- Curate the total number of displayed SKUs and storytelling touchpoints



Last Updated August 12, 2026 8:20 AM | Best Buy partner and internal use only. Do not copy, publish, or distribute. The material in this document is confidential to Best Buy.

Table Merchandising

Requirements

- All presentations require Demo, Display or Dead Mock Display product(s) to be included
- All interactive elements must meet accessibility standards
- Display/demo products on top wood surface need to be secured leveraging platforms, cables or mounts
- Products may not extend beyond the sides of the fixture
- Additional graphics and educational touchpoints can be added, but not cover more than 25% of the top wood surface
- Every display or salable SKU needs a Peg Label or Fact Tag ESL
- Plan for presentation elements giving clear space to accommodate power drop if required

Best Practices

- Fixture was intended to be leveraged as a front and a back with salable stock on the sides, rather than a 360 ° shopping experience
- Curate the total number of displayed SKUs and storytelling touchpoints



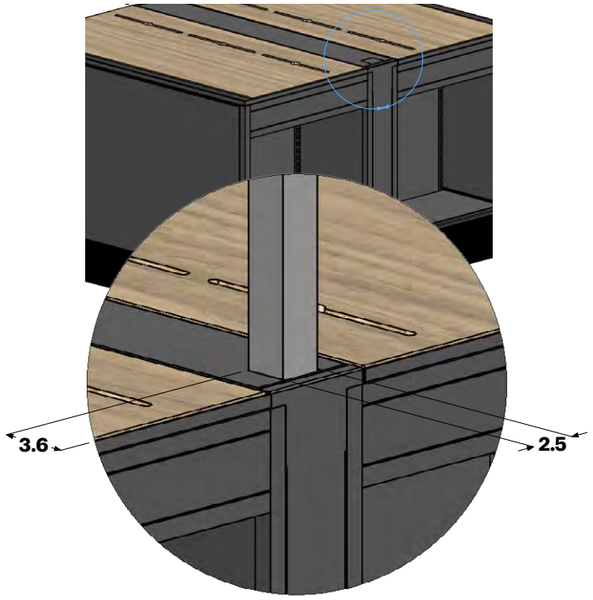

Last Updated August 12, 2026 8:20 AM | Best Buy partner and internal use only. Do not copy, publish, or distribute. The material in this document is confidential to Best Buy.

Fixture Modularity

Requirements

- Larger box stock product can be accommodated by removing the two interior panels allowing products to extend up to the entire width of the fixture
- Standards have been built into the sides of the fixtures and standard Best Buy peghooks, 2ft merch bars and 2ft shelves can be used in these areas
- Non-standard 12.5”cross bars are orderable for pegged presentations on the 2ft Endcap
- Detailed documentation exists on the interior cavity, partner with project manager for those details



Interior Panels can be removed to allow for large box stock



Non-standard 12.5” cross bar for use on the 2ft Side Stock Endcap. EPDM# 1023564

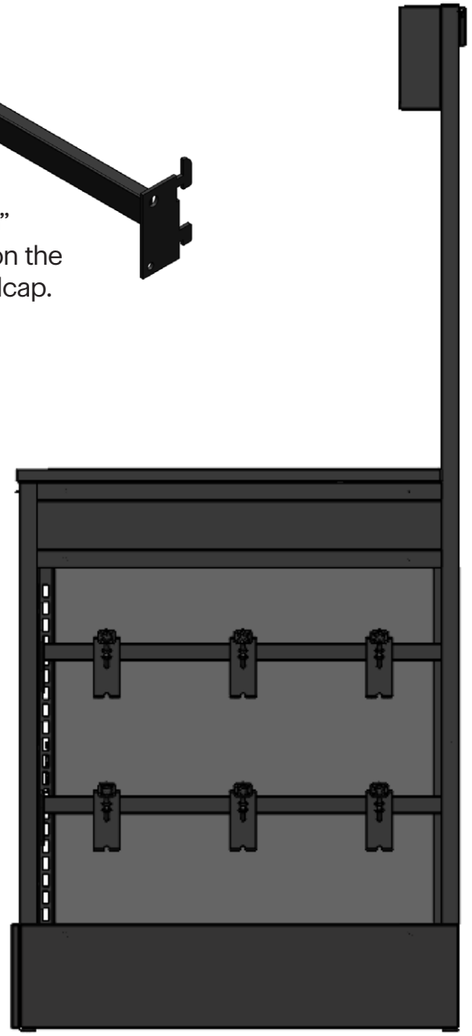

Shelves, peghooks, and merch bars can be leveraged on sides

Last Updated August 12, 2026 8:20 AM | Best Buy partner and internal use only. Do not copy, publish, or distribute. The material in this document is confidential to Best Buy.

Theater District
Wall Fixture
Vendor Guidelines

© 2024 BEST BUY. ALL RIGHTS RESERVED.

Overview

The Theater District space invites you to showcase disruptive and immersive experiences near the race track. Of the Theater District fixtures, the Wall Fixtures allow for the most disruptive sightlines, biggest branding opportunity and largest merchandisable area.

Best Buy-Managed Components
- Framework wall fixtures (detailed in the following pages)
- Hang bars and peg hooks
- Electronic shelf labels (ESLs)

Vendor-Managed Components
- Logo header (detailed in the following pages)
- Standard gondola shelves
- Demo, Display and Deadmock Display products
- Custom fixturing elements
- Supporting graphics as desired



**Drawings and models of all parts available upon request.*

Last Updated August 12, 2026 8:20 AM | Best Buy partner and internal use only. Do not copy, publish, or distribute. The material in this document is confidential to Best Buy.

Dimensions

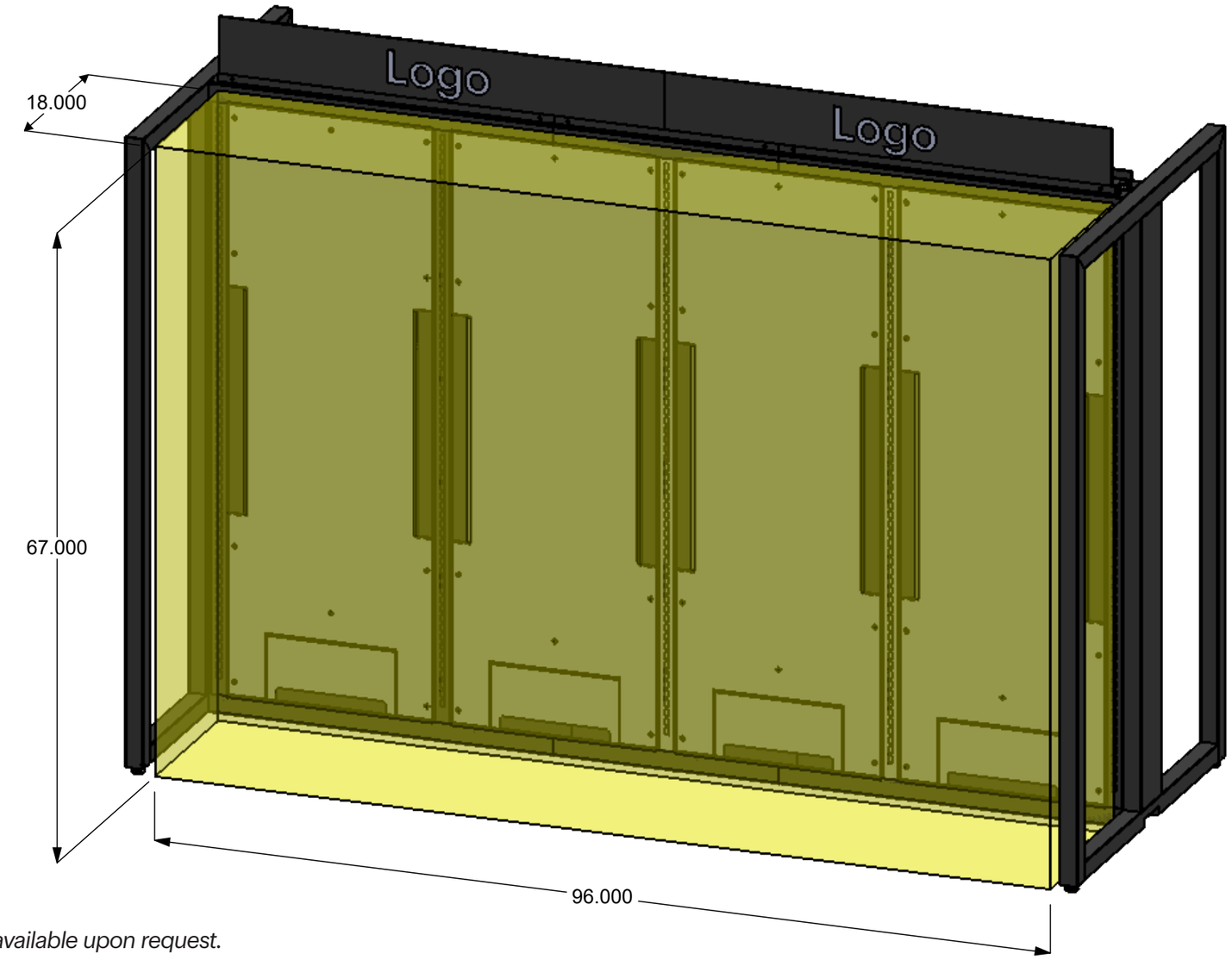

**Drawings and models of all parts available upon request.*

Last Updated August 12, 2026 8:20 AM | Best Buy partner and internal use only. Do not copy, publish, or distribute. The material in this document is confidential to Best Buy.

Power and Structural Support

Each 4’ section of a Wall Fixture contains one split quad power receptacle in the fixture base. Each split quad receptacle allows vendors access to one continuous (24/7) power outlet and one controlled (EMS) power outlet.

Switched power would be approximately .8 amps per display position (20 total display positions per Theater District) and continuous power would be taken from wall breakout which equates to a little over 2 amps per display position.

Vendor Requirements

- All hanging presentation elements should hook into the slotted vertical uprights
- Determine if any floor standing elements are at risk for tipping and if ballasts, bracing, or anchoring is needed
  - — Minimum overturning factor of safety (FS) is 1.5 if minimum FS cannot be achieved through self-weight alone

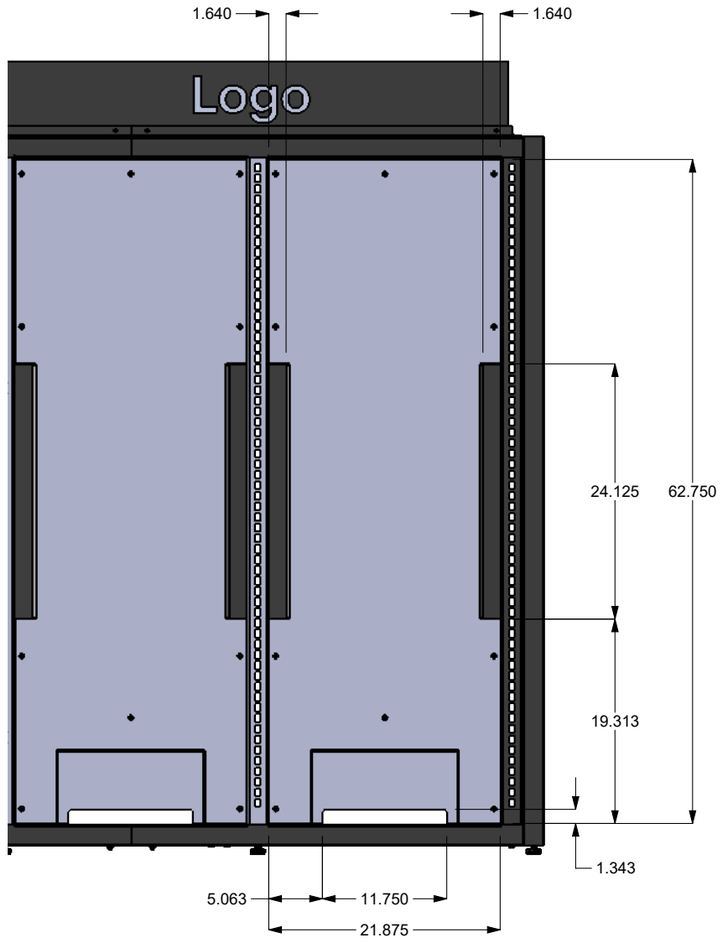

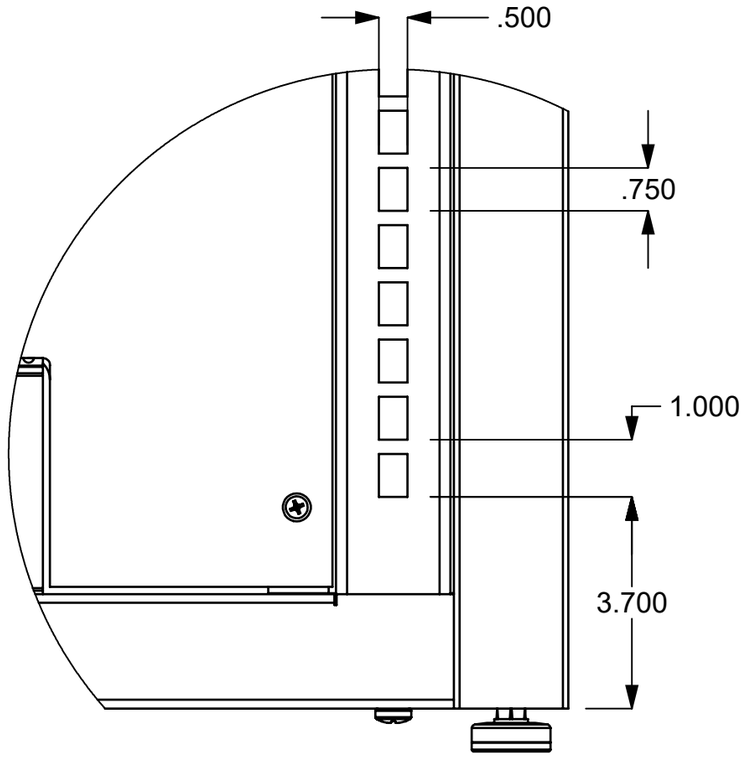

Slotted vertical uprights (detail)

Last Updated August 12, 2026 8:20 AM | Best Buy partner and internal use only. Do not copy, publish, or distribute. The material in this document is confidential to Best Buy.

Graphics

Vendor Requirements

- Produce one branded header per wall fixture in your stage
  - — Size: 95.87”W x 7”H or 47.87”W x 7”H
  - — Substrate: .1875 Ultraboard, Black/Black/Black
  - — Include a centered white logo (max. 3.5”H)
  - — Templates are available upon request
- Create additional graphics as desired
  - — SEG (standard or backlit) is the preferred substrate for large format graphics. SEGs must be attached by hooking into framework uprights
  - — If covering a wall with magnetic graphics, they must be produced in multiple sheets and diecut around slots
  - — Copy must be kept a minimum of 26” above the floor. Note: Floor graphics are not permitted
- Include in your collateral a directive for product fulfillment
  - — Examples:

    Scan price tag QR codes to:
    - · Get product info
    - · Check availability
    - · Get expert help
    - · Send to Order Pickup

Scan price tag QR codes to send to Order Pickup.

REQUIRED GRAPHIC

8’ Activation Branded Header



4’ Activation Branded Header



Find more details and dimensions in these guides on Partner Portal:

Copy & Claims Guidelines

Last Updated August 12, 2026 8:20 AM | Best Buy partner and internal use only. Do not copy, publish, or distribute. The material in this document is confidential to Best Buy.

Graphics

Best Practices

- Ensure the product serves as the hero of the presentation; all signage and collateral should act in support
- Beyond the branded headers, use vendor logos sparingly
- Feature each signage element at its most impactful moment of the customer's journey (i.e. Copy-heavy signage should fall after a customer's engagement with the product)
- Large and Extra-large positions will be offered to activate the back side of the Wall Fixture in select markets—partner with your project manager for details

OPTIONAL GRAPHICS

Magnetic Receptive Panels

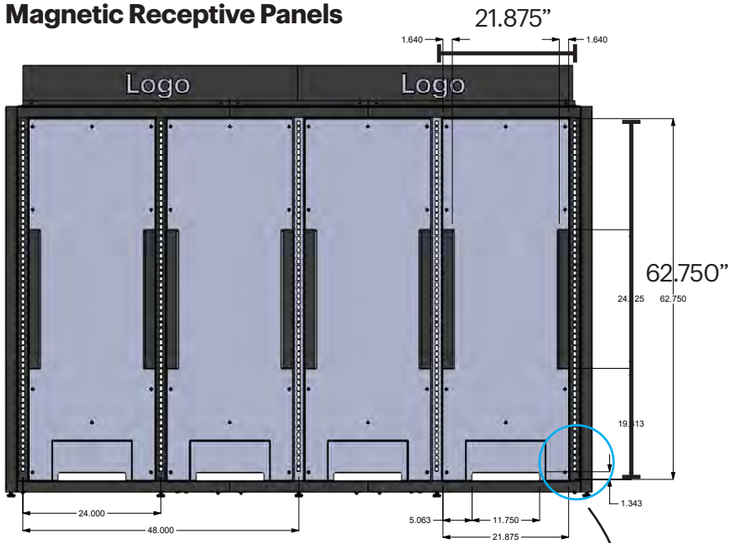

Recommended substrate:
Magnetic Receptive (10-12.5mil, 94-97 bright)

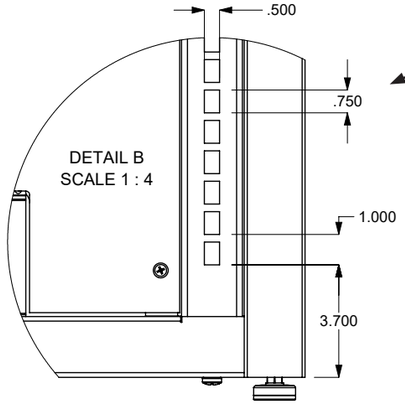

Full-Wall SEG Graphic

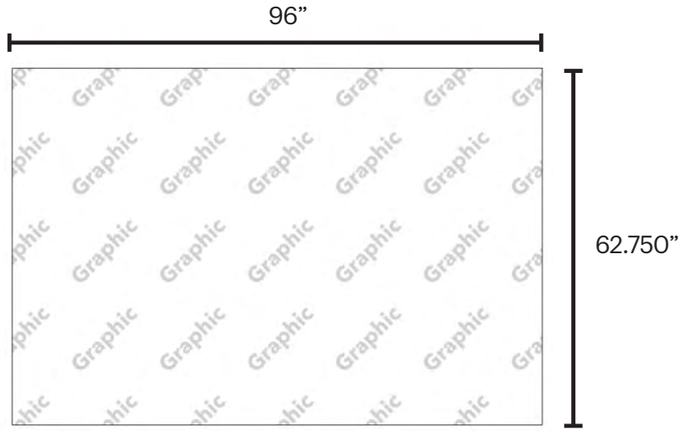

Recommended substrate:
Lumaflex SEG. Sew or heat weld 3mm x 13.3mm keder size around the entire graphic.

Find more details and dimensions in these guides on Partner Portal:

Copy & Claims Guidelines

Last Updated August 12, 2026 8:20 AM | Best Buy partner and internal use only. Do not copy, publish, or distribute. The material in this document is confidential to Best Buy.

Graphics — Product Fulfillment

With little to no salable stock available for customers within the Theater District, it is essential that they understand how to shop products in this space.

Best Buy will provide and planogram “Scan. Learn. Buy.” signage (shown at right). In addition to these pieces, vendors ***must supplement with their own fulfillment messaging***.

Vendor Requirements

- Include in your collateral a directive for product fulfillment.
  - — Examples:
    Scan price tag QR codes to:
    · Get product info
    · Check availability
    · Get expert help
    · Send to Order Pickup

Scan price tag QR codes to send to Order Pickup.



Peg label ESL (attached on top)



Peg label ESL (attached on bottom)

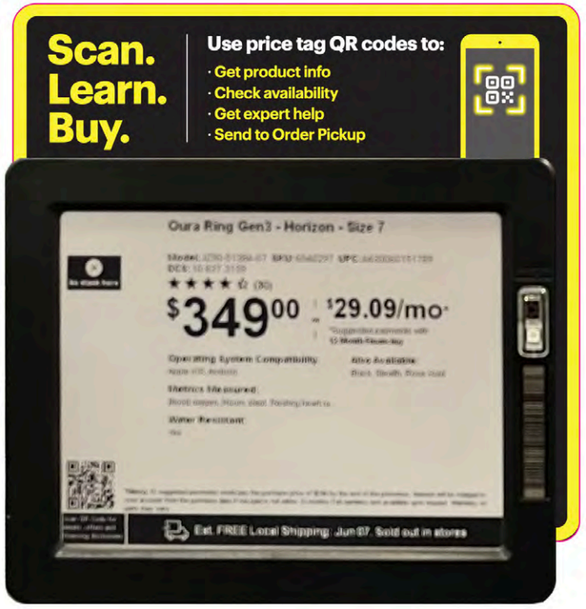

Fact tag ESL

Last Updated August 12, 2026 8:20 AM | Best Buy partner and internal use only. Do not copy, publish, or distribute. The material in this document is confidential to Best Buy.

Merchandising

Vendor Requirements

- Contain all products, fixtures and signage within the fixture walls and Side Stock Endcap (in XL Position)
  - — If any fixture elements on the walls exceed 18” in depth, fins are required on uprights or a cane-detectable element is required below
  - — Shelved programs have an ideal depth of 18” or less and any supporting floor-seated fixtures should not exceed 24” in depth
- Do not extend above the 65” fixture wall height.
- All presentations require Demo, Display or Dead Mock Display product(s) to be included:
  - — **Demo:** An out-of-box product feature that allows for an interactive experience
  - — **Display:** A non-interactive product included to showcase materiality, form factor, colorways and sizing
  - — **Dead Mock Display:** A non-interactive 3D model of salable product intended to showcase form factor, colorways and sizing



Last Updated August 12, 2026 8:20 AM | Best Buy partner and internal use only. Do not copy, publish, or distribute. The material in this document is confidential to Best Buy.

Merchandising & Illumination

Merchandising Requirements

- Ensure product is the hero of the presentation. Do not crowd with graphics or copy
- Support all products, display or salable, with a proximally located electronic shelf label (ESL)
- Design your display components with modularity in mind to ensure easy replacement when products/ signage change
- Shelves or merch bars must be Vendor provided, peg hooks can be leveraged from Best Buy's owned inventory
- Large and Extra-large positions will be offered to activate the back side of the Wall Fixture in select markets—partner with your project manager for details

Lighting Requirements

- Maintain a LUX reading of 2000 or lower for all lighting with the exception of the logo header as noted separately in Lighting guidelines.
- Lighting must not distract from or diminish the display product, which should remain the hero of the presentation
- Permitted lighting options include uplighting, shelf lighting, backlighting, soft ambient lighting along fixture edges, illuminated logos on headers, and light emitted from display products and monitors.
- Flashing, pulsating or undulating light, downlighting, in-case and lighting behind acrylic or glass *are not permitted*.



Best Buy-managed: Framework
Vendor-managed: Shelving, Graphics, Display Monitor



Best Buy-managed: Framework
Vendor-managed: Graphics, SEG frame, casework

Last Updated August 12, 2026 8:20 AM | Best Buy partner and internal use only. Do not copy, publish, or distribute. The material in this document is confidential to Best Buy.

Merchandising & Illumination

Merchandising Best Practices

- Design wall fixture elements and freestanding fixtures in 48”W sections to allow greater cross-compatibility among COS Brand Zone, Convergence Zone and Gondola fixtures
- Leverage the uprights when attaching merchandise-supporting shelves and wall elements.
- Leveraging modular platforms and product display wedges that can be leveraged on wall shelves, SSE, as well as other fixtures

Lighting Best Practices

- Use lighting to enhance the brand and product identity.
- Keep light forms engaging.
- Use lighting to show product activation via interaction points.
- Ensure extra lighting can’t be confused for a product feature.



Convergence Zone



Theater District



Inline



Theater District



Side Stock Endcap



Standard Endcap

Last Updated August 12, 2026 8:20 AM | Best Buy partner and internal use only. Do not copy, publish, or distribute. The material in this document is confidential to Best Buy.

Fixture Parts

Refer to the part numbers below when ordering any necessary components:

Fixture Component	Best Buy Part Number
8’ Convergence Wall	1010346
Convergence Wall Header	1014094
12” Peghook (Wire Grid & Merch Bar) Black	1010643
4” Peghook (Wire Grid & Merch Bar) Black	1010717

Last Updated August 12, 2026 8:20 AM | Best Buy partner and internal use only. Do not copy, publish, or distribute. The material in this document is confidential to Best Buy.

TV Dream State

Home Theater Dreamstate Endcap - Black

EPDM #R0005-A
Planograms:
Areas used: Home Theater

- Blue box designated the area for the VPD display
- A vendor logo header is required in the top 6" of the display.
  - Brand logo should be illuminated, and follow C7 Lab guidance on brightness



- Example - partner with Store Design for detailed drawings and material specs.

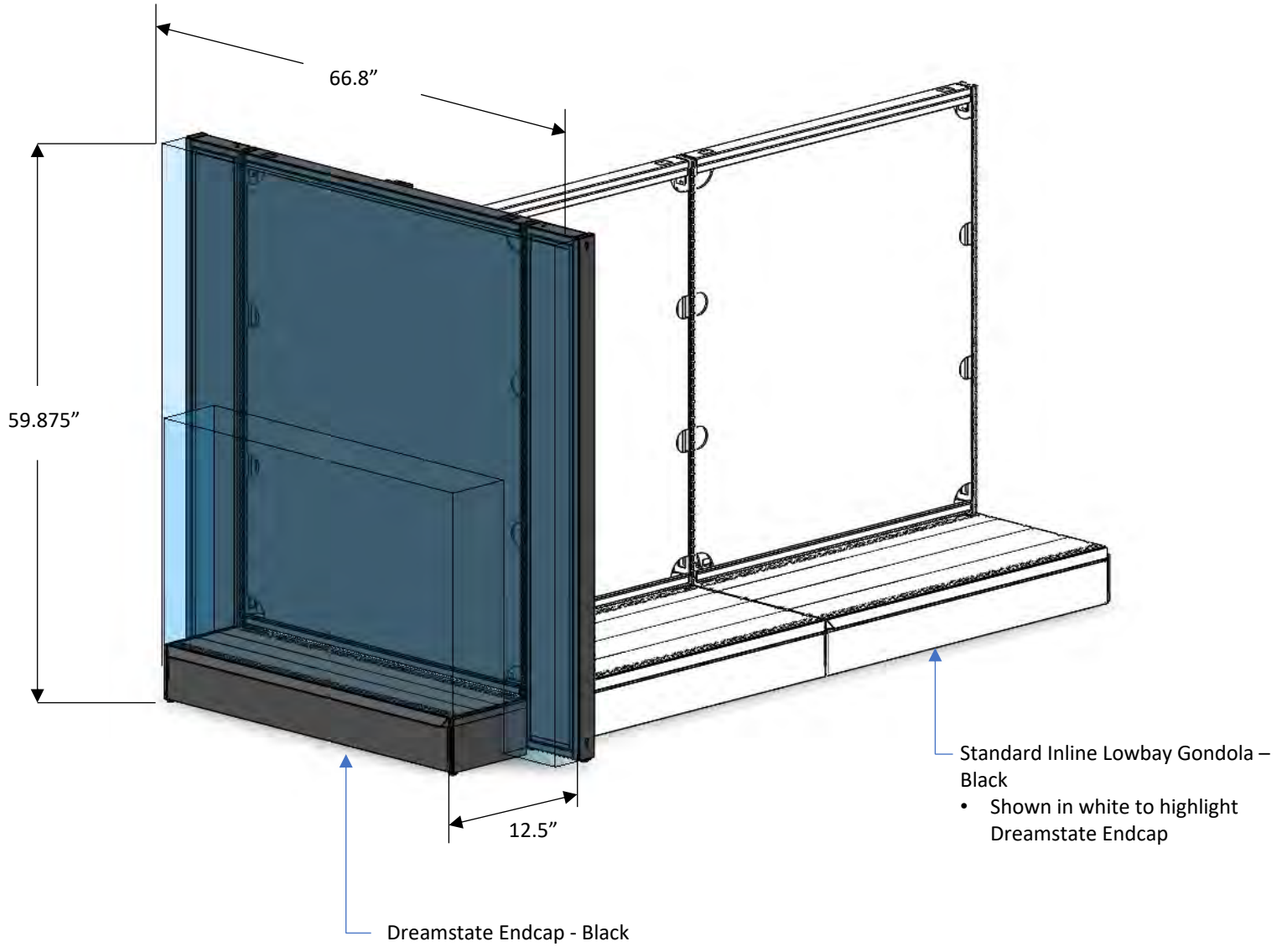

Last Updated August 12, 2026 8:20 AM | Best Buy partner and internal use only. Do not copy, publish, or distribute. The material in this document is confidential to Best Buy.

TV Winglet Endcap

Fixture Overview

TV Winglet Endcap offers an opportunity for vendors to display large format TVs. The Winglet wall is made of Fiberboard/MDF with Black laminate finish.

There are two versions of this fixture:

- Generation 2: The majority of existing stores and go foward prototypes
- Generation 1: Small store count fixture.
- Vendors must plan for both fixtures. Partner with project manager for exact breakout.

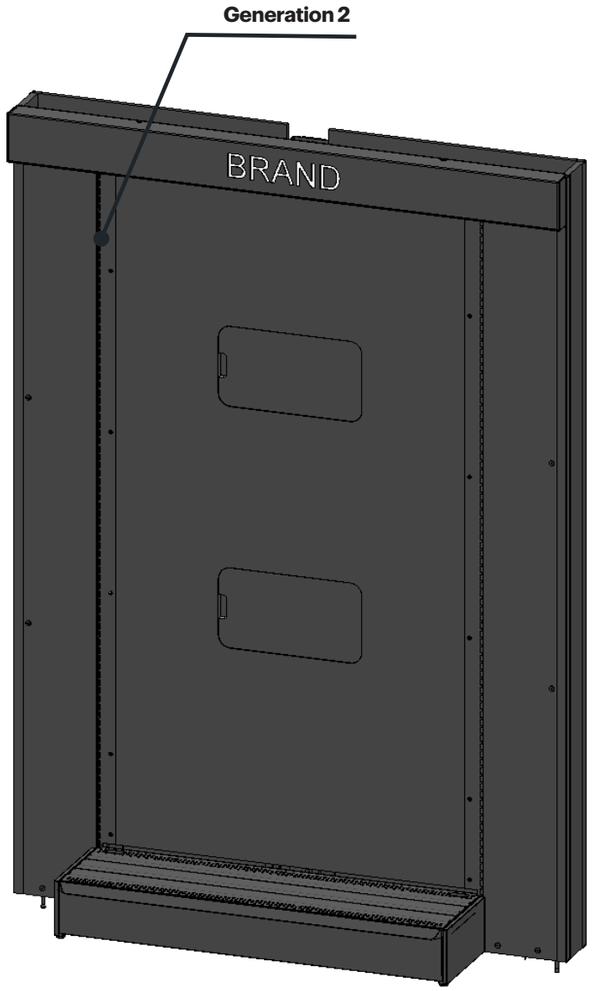



Last Updated August 12, 2026 8:20 AM | Best Buy partner and internal use only. Do not copy, publish, or distribute. The material in this document is confidential to Best Buy.

Header

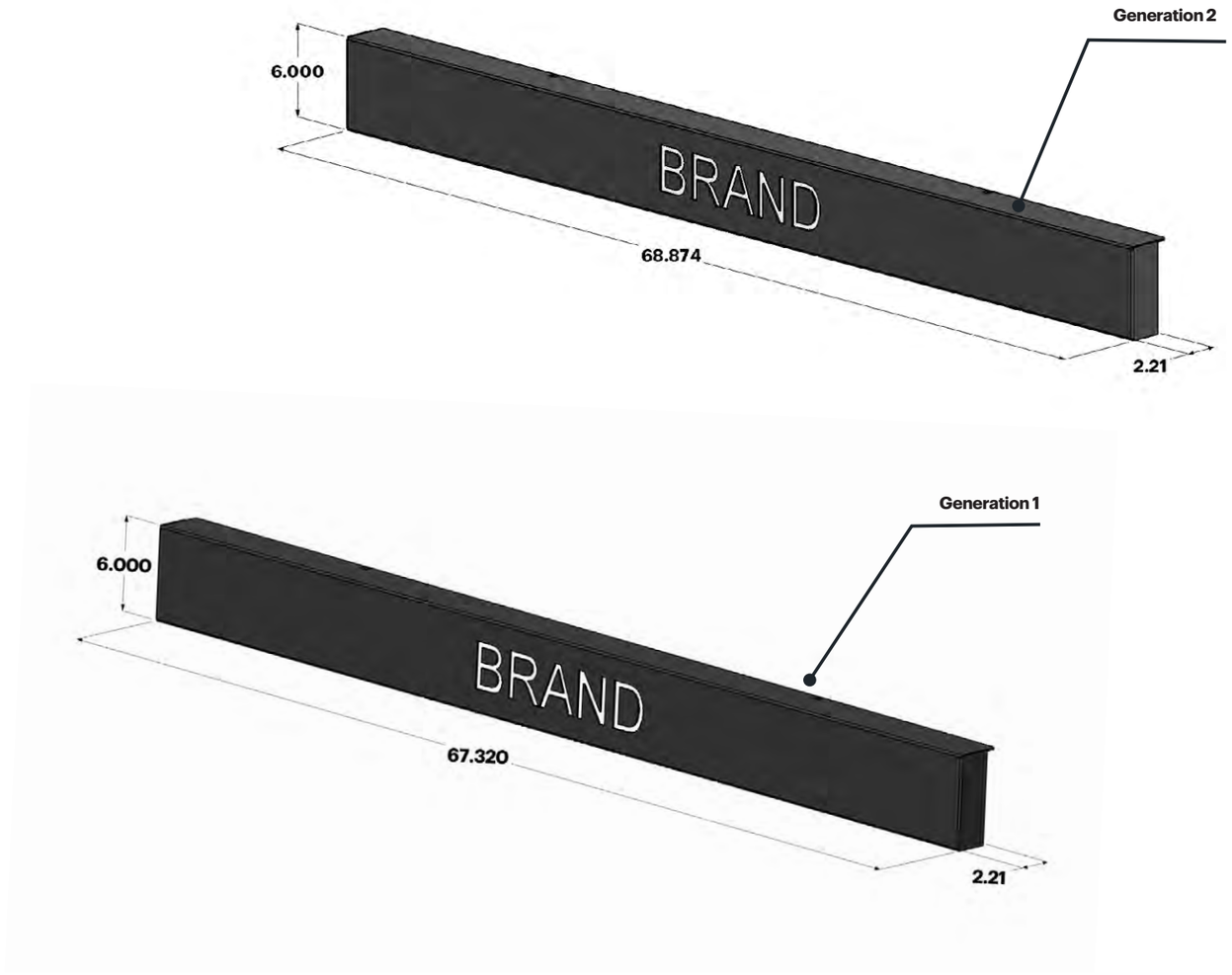

Last Updated August 12, 2026 8:20 AM | Best Buy partner and internal use only. Do not copy, publish, or distribute. The material in this document is confidential to Best Buy.

Overall Dimensions

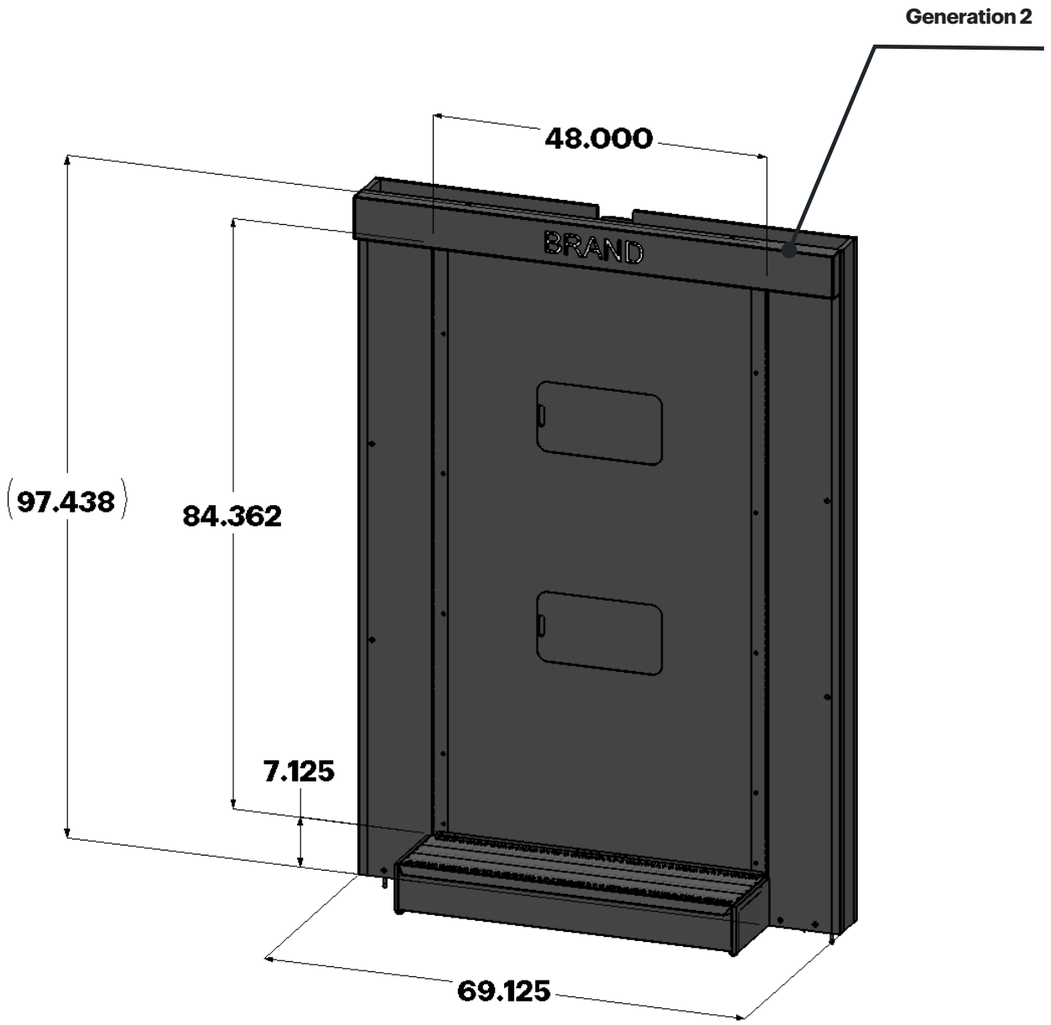

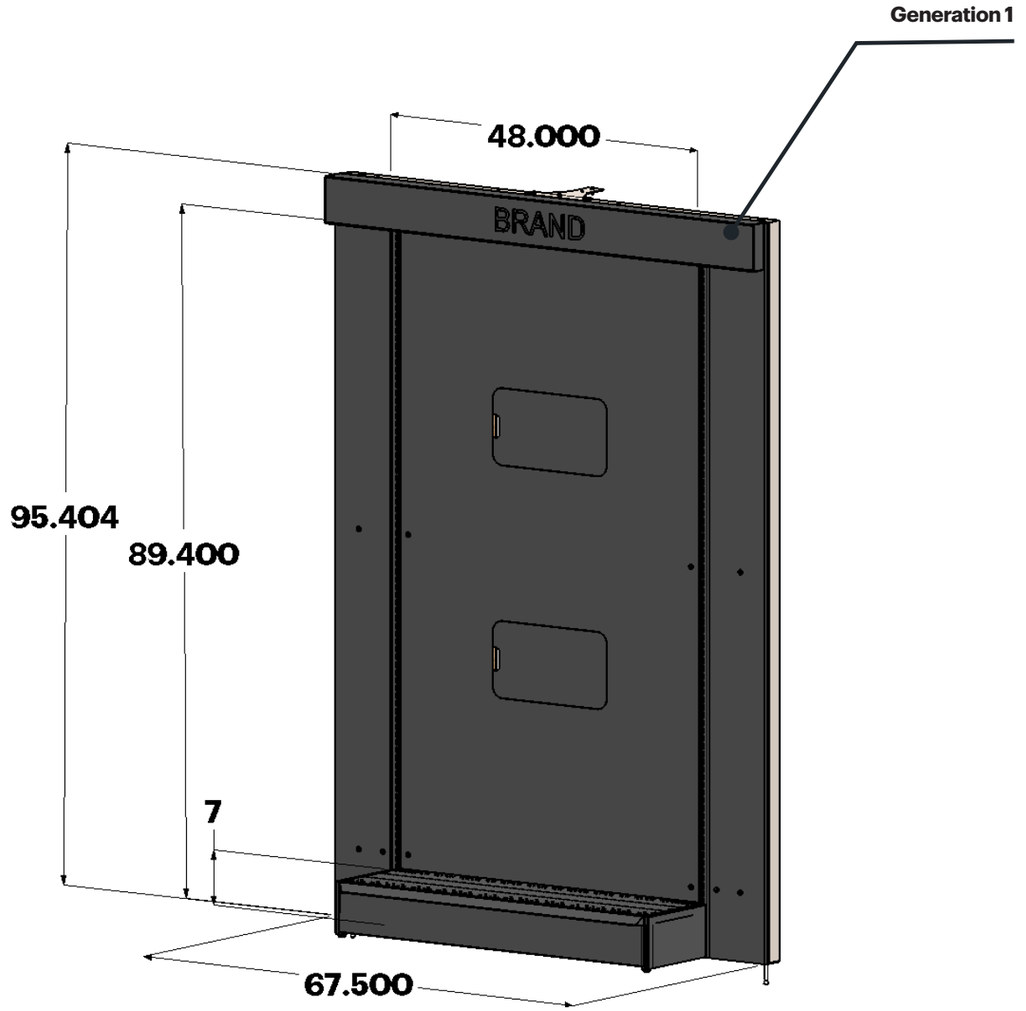

Last Updated August 12, 2026 8:20 AM | Best Buy partner and internal use only. Do not copy, publish, or distribute. The material in this document is confidential to Best Buy.

Power and Attachments

GRAPHIC AREA

ACCESS PORTS

Generation 2

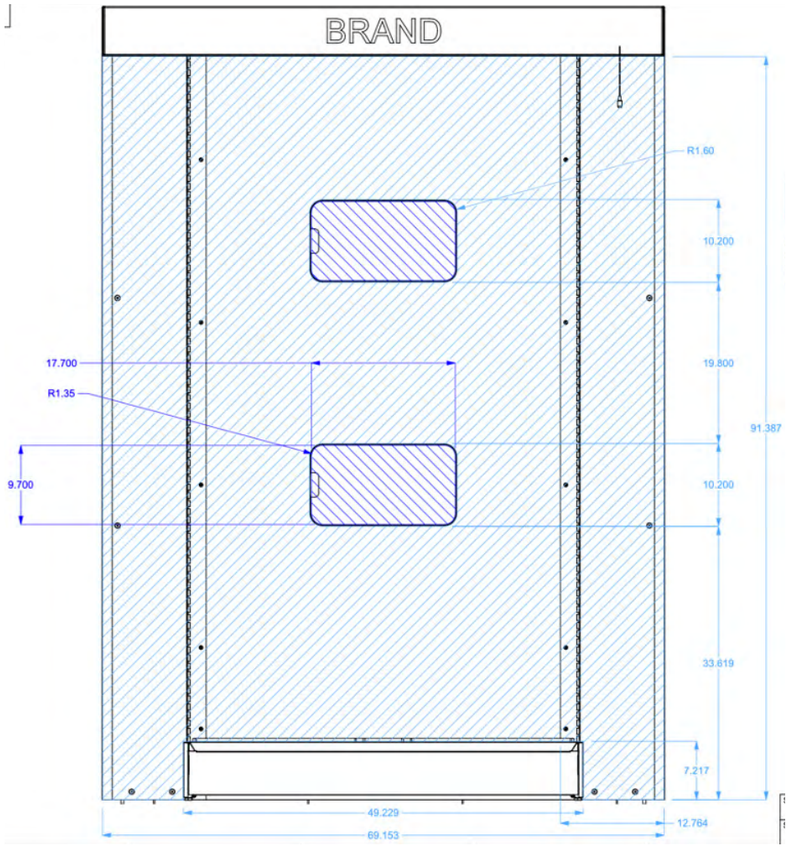

Generation 1

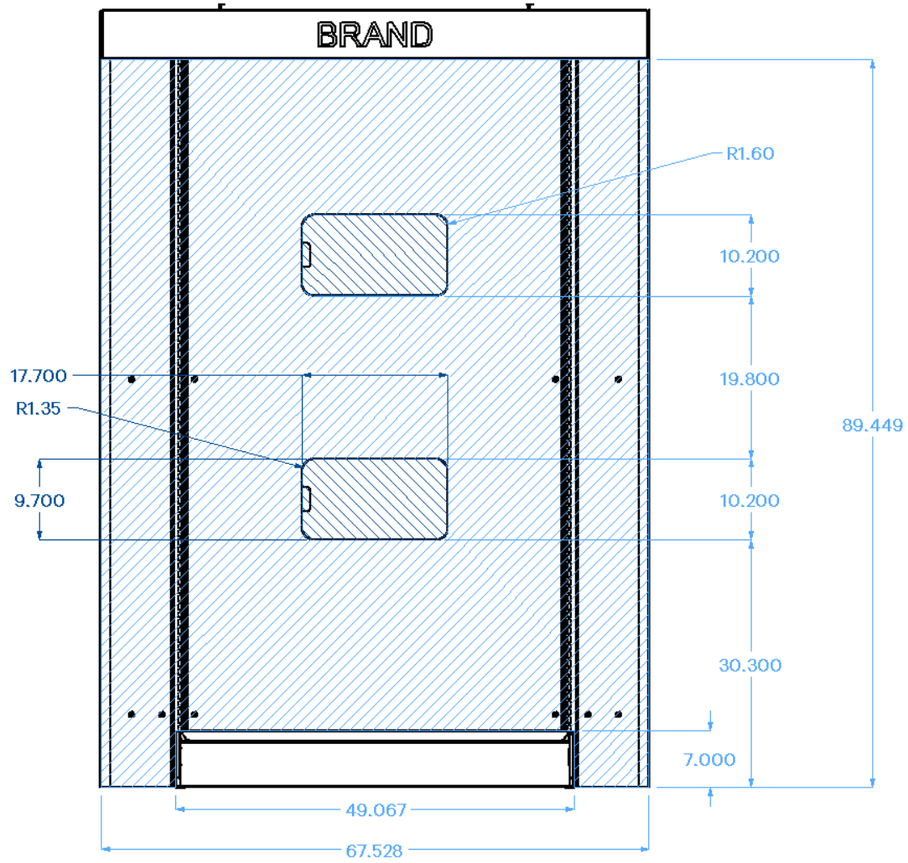

Last Updated August 12, 2026 8:20 AM | Best Buy partner and internal use only. Do not copy, publish, or distribute. The material in this document is confidential to Best Buy.

Graphics

Vendor Expectations

- Vendors are required to produce a standard header
- **Substrate:** 180cv3 with 8520 matte overlam, white

Vendor Best Practices

- A backer graphic should be created to go behind the product to unify the display
- Backer graphics must be neutral in color and not compete with the product on display.
- Any educational material should be added to a wedge from that seats on the base deck.
- No copy should appear surrounding the top or sides of the product.

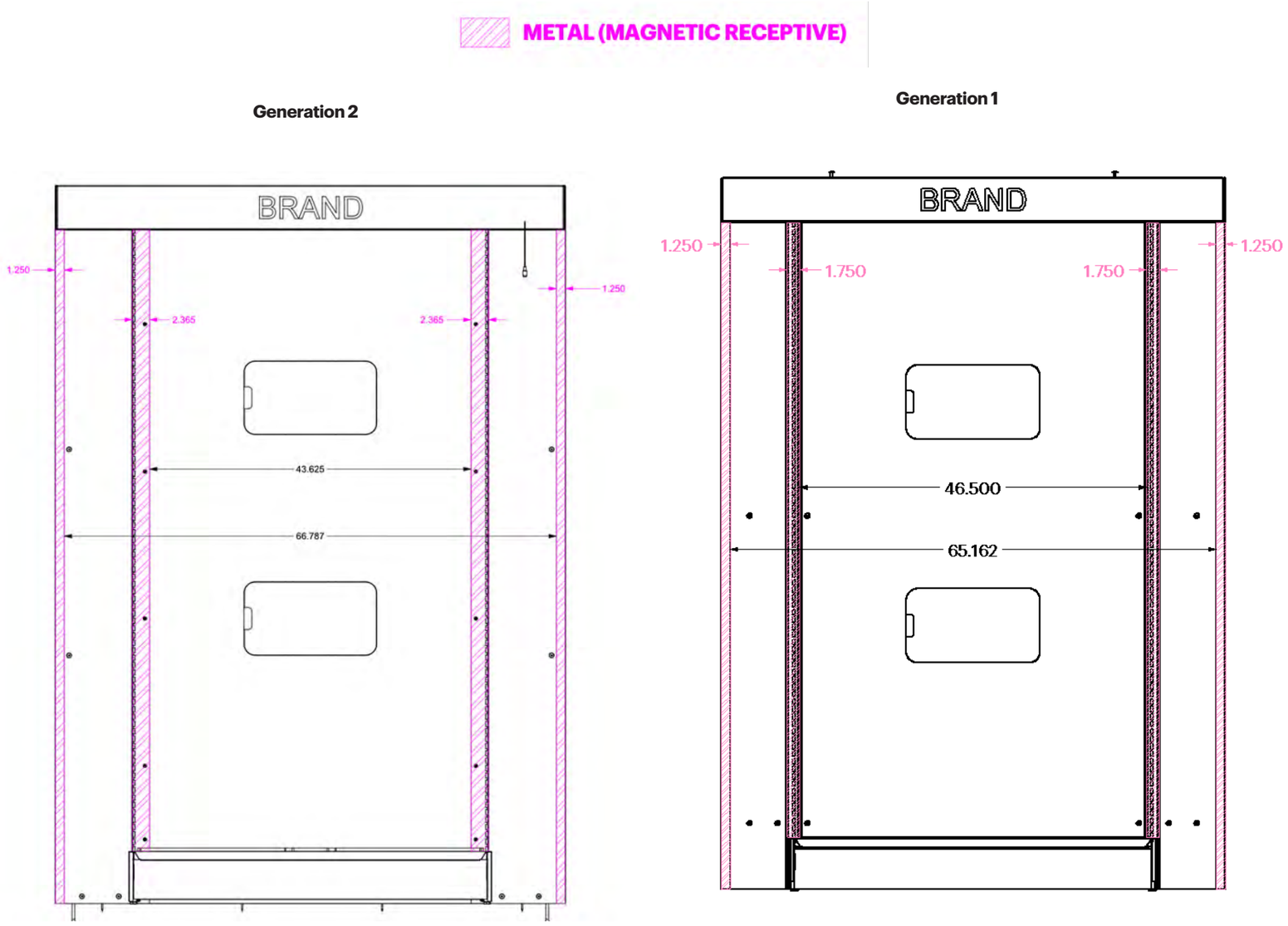

Last Updated August 12, 2026 8:20 AM | Best Buy partner and internal use only. Do not copy, publish, or distribute. The material in this document is confidential to Best Buy.

Merchandising

Vendor Expectations

- A proximally located ESL is required for each TV display (*Ideas on ESL attachment available upon request*)
- A maximum of two TVs per endcap
- Keep display within allotted height, width and depth.
- Ensure all interactive elements, including buttons and touch components, meet ADA requirements.
- Ensure all electronics are reviewed by the Technology Design Lab (see Technology Design Standards below).
- Use permitted forms of lighting only. Lit logos on headers and illumination from display products and monitors are permitted. No backlighting, downlighting or under-cabinet lighting is permitted. Other forms of lighting are allowed.



You will need details and dimensions in this guide on Partner Portal:

ESL Pricing

Last Updated August 12, 2026 8:20 AM | Best Buy partner and internal use only. Do not copy, publish, or distribute. The material in this document is confidential to Best Buy.

Next Steps

1 READ

the following from Partner Portal for details and dimensions **you will need**:

ESL Pricing

2 REQUEST

from your Best Buy contact:

- Drawings and models of parts you want to order. Provide the part numbers and specify Solidworks or STEP file type. **Best Buy provides [include BBY-provided part names here]*.
- A list of preferred vendors who can manufacture the fixture parts.
- Examples of Best Buy-provided graphics, if desired.

Last Updated August 12, 2026 8:20 AM | Best Buy partner and internal use only. Do not copy, publish, or distribute. The material in this document is confidential to Best Buy.

Universal Buttons

Overview

Best Buy deploys a universal button for use across all presentations in store. This provides consistency and clarity for customers to easily recognize how to trigger demonstrations of products on display.



Last Updated August 12, 2026 8:20 AM | Best Buy partner and internal use only. Do not copy, publish, or distribute. The material in this document is confidential to Best Buy.

Specifications

Vendor Expectations

- Ensure your button adheres to the following specifications:
  - — Duco DTPB-X-32 (only approved button)
  - — Illuminated only with white light
  - — Shown with text that clearly defines the button action

    Text must be:
    - — Black, size 14, Human BBY Medium
    - — Located below the button
    - — Printed on the substrate (no decals)
- Illuminate buttons according to the lighting requirements in the Technology Design Standards on Partner Portal.

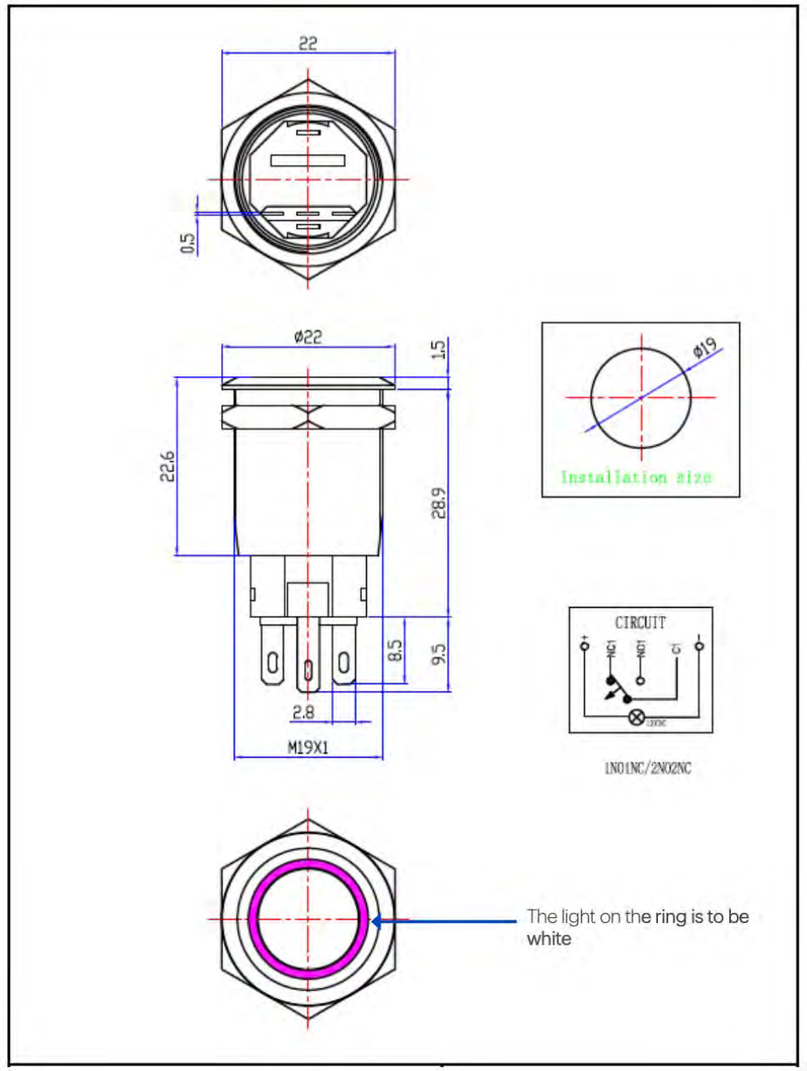

Find more details and dimensions in this guide on Partner Portal:

Technology Design Standards

Last Updated August 12, 2026 8:20 AM | Best Buy partner and internal use only. Do not copy, publish, or distribute. The material in this document is confidential to Best Buy.

Vendor Home

Overview

Vendor Homes offer vendors unique opportunities to create immersive, brand-focused experiences that go beyond traditional displays by expressing the vendor's voice, look and feel while bringing stories to life.

Vendor Homes require a component of a vendor-provided freestanding fixture and supported labor.

Because of the flexible fixture options and expansive design opportunities, please partner with your Best Buy contact to plan your Vendor Home.

**Drawings and models of all parts available upon request.*



Last Updated August 12, 2026 8:20 AM | Best Buy partner and internal use only. Do not copy, publish, or distribute. The material in this document is confidential to Best Buy.

Power and Attachments

Vendor Expectations

- If your Vendor Home appears on the perimeter wall, power any fixtures, components and products through the wall. Attach any fixtures and components via the vertical uprights. (See Slotted Vertical Uprights Vendor Guidelines for details.)
- If your Vendor Home appears on a freestanding fixture, ensure any powered fixture is compatible with Best Buy's 2" x 2" fixture drops and Connectrac.
  - — ***Note:*** *Small appliance tables cannot be powered. Ask your Best Buy contact if you have questions about which fixtures are power-compatible.*
  - — ***Note:*** *Depending on power and data requirements, multiple fixture drops may be needed. Connectrac may be used as an alternate power routing method from walls to floor pad fixtures, however, provisions must remain to route power from the ceiling via fixture drops.*

Integrated Technology

Integrated technology, including lighting brightness and color temperature, must align with the Technology Design Standards on Partner Portal. Best Buy's Technology Design Lab must approve any working electrical components.

Lighting

Perimeter Wall Fixture Expectations

- Lit logos on headers, lit subheads, and light emitted by display products and monitors *are permitted*. All other forms of lighting *are not permitted*.
- Ensure logo in primary header follows template, material and illumination specifications.

Freestanding Fixture Expectations

- Uplighting, shelf lighting, backlighting, fixture edge soft ambient lighting, lit logos on headers, and light emitted by display products and monitors *are permitted*.
- Downlighting *is only permitted* in instances when overheads or canopies block ceiling-emitted light.
- All other forms of lighting, including under-cabinet lighting, pendant light fixtures and excessive lighting *are not permitted*.

Touch

- Ensure all interactive elements, including buttons and touch components, meet ADA requirements.

Merchandising

Vendor Expectations

- Ensure product is the hero of the presentation.
- Position products at accessible heights.
- Ensure product does not extend wider than the fixture edges or higher than the fixture height.
- Group products logically (by category or theme) for a seamless shopping experience.
- Support all products, display or salable, with a proximally located electronic shelf label (ESL).
- Design your display components with modularity in mind to ensure easy replacement when products change.
- Include your choice of Demo, Display or Dead Mock Display product(s).
  - — **Demo:** An out-of-box product feature that allows for an interactive experience.
  - — **Display:** A non-interactive product included to showcase materiality, form factor color-way and sizing.
  - — **Dead Mock Display:** A non-interactive 3D model of salable product intended to showcase form factor, colorways and sizing.
- Props may be used sparingly and intentionally so they never distract from product displays. Select only durable, non-breakable materials (no glass, mirrors, ceramics, or dried plants) that are easy to clean, resistant to wear, and securely anchored with anti-shrink measures such as adhesives or tethers.
  - ***Note:*** *Printed representational stand-ins of products are not permitted.*

Last Updated August 12, 2026 8:20 AM | Best Buy partner and internal use only. Do not copy, publish, or distribute. The material in this document is confidential to Best Buy.

Best Buy-Provided Fixtures

Best Buy-Provided Fixtures:
Overview

Vendor Expectations

- Keep all components of your display within the allotted floor space.
  Note: *Ask your Best Buy contact for the available space based on the store format.*
- Position fixtures to maximize visibility without blocking sightlines to other areas of the store.
- Ensure space and fixtures are ADA-compliant. Maintain clear pathways to give customers easy access.
  — GCA & IBC Code require aisles serving elements (“architectural components”) to be at least 48”W.

Best Practices

- Design your Vendor Home to allow for flexible placement of fixtures in multiple orientations.

Find more details and dimensions in these guides on Partner Portal:

Home Theater Vendor Home

Perimeter Wall



Convergence Zone

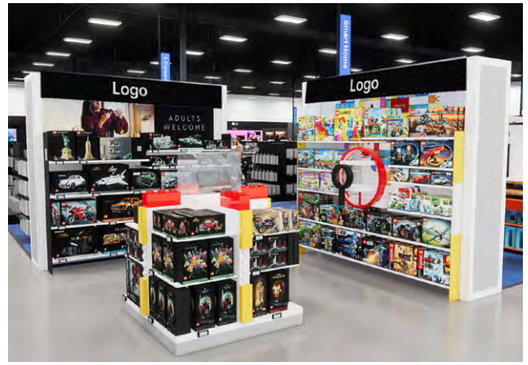

Small Appliance Table

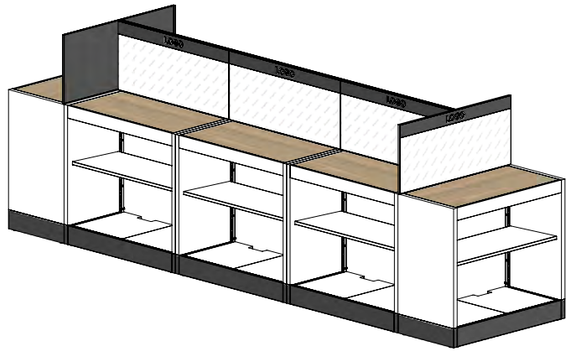

Lowbay Gondola



Last Updated August 12, 2026 8:20 AM | Best Buy partner and internal use only. Do not copy, publish, or distribute. The material in this document is confidential to Best Buy.

Best Buy-Provided Fixtures:
Specifications

	Perimeter Wall	Convergence Zone	Small Appliance Table	Lowbay Gondola
	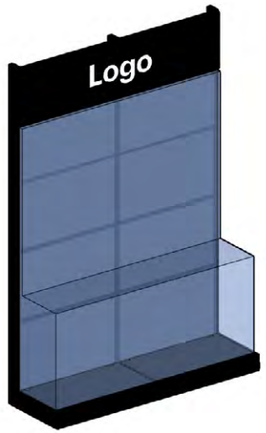	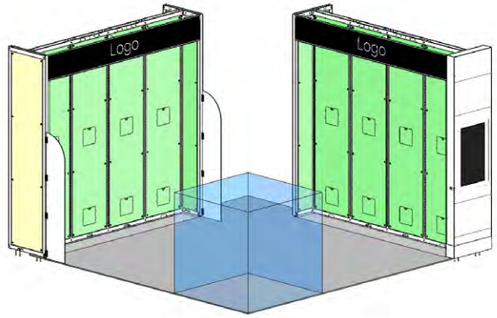		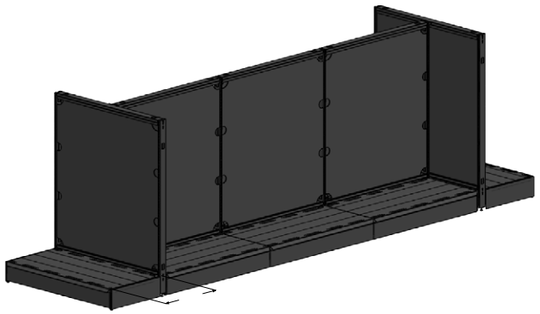
Activatable Space	95.938”W x 112”H x 24”D 8’W x 8’D (floor pad in front of perimeter wall fixture)	96”W x 84”H x 10.5”D (single wall) 11’W x 11’D (floor pad)	44.875”W x 18”H x 22.4”D (single table) *Multiple tables may be combined to display your Vendor Home.	Dimensions vary based on gondola type. *12 linear feet of a lowbay gondola must be used to qualify as a Vendor Home.
Dimensions are approximate. Ask your Best Buy contact for additional details.				

Last Updated August 12, 2026 8:20 AM | Best Buy partner and internal use only. Do not copy, publish, or distribute. The material in this document is confidential to Best Buy.

Best Buy-Provided Fixtures:
Graphics

Vendor Expectations

- Provide all graphics, complying with the Copy & Claims Guidelines on Partner Portal.
- Include clear, branded signage that communicates important information but limits excessive text to maintain visual appeal across the Vendor Home.
- Ensure graphics don't distract from or diminish the visual impact of the product.
  - — If using backer panels in your display, leverage neutral colors and textures.
- Include your logo in the uppermost part of your display, adhering to the allotted header space for your fixture type (shown at right).
  - — Logo headers on the **perimeter wall** must follow the sizes, finishes and placement shown at right.
  - — Logo headers on **all other fixtures** must be displayed within their allotted header space, but are otherwise flexible in color, size, etc.
    - ***Note:*** *Preferred style is a white illuminated logo centered on a black horizontal header.*
- Aside from the logo header, use your logo sparingly.
- Include, if desired, one QR code per four linear feet of vendor display. Ensure your code links to BestBuy.com or a closed microsite created only for Best Buy.
- Ensure digital content complies with Best Buy's Technology Design Standards on Partner Portal.

Perimeter Wall



Header size: 24"H; width varies
Logo size: 12"H
Backer finish: Alpolic PE BLX Black
Letter finish: White Light, White Optics 009 Matte
Logo placement: Centered vertically and horizontally within header

Small Appliance Table Backer



Header size: 4"H x 47.8"W
Logo size: 2.88"
Substrate: 20mil Magnetic Vinyl, White
Letter finish: Hex: #ffffff
Logo placement: Centered vertically and horizontally within header

Note: *Connect with your Best Buy contact for complete backer fixture details and drawings if needed.*

	Convergence Zone	Small Appliance Table	Lowbay Gondola
	98.375"W, 12"H, Logo	44"W, 4"H, Logo	47"W, 5.9"H, Logo
Header Space	Uppermost 12"	Uppermost 4"	Uppermost 6"

Last Updated August 12, 2026 8:20 AM | Best Buy partner and internal use only. Do not copy, publish, or distribute. The material in this document is confidential to Best Buy.

Vendor-Provided Fixtures

Vendor-Provided Fixtures:
Overview

Vendor Expectations

- Provide all fixtures and displays unless otherwise noted.
- Keep all display components within the allocated floor space.
  Note: *Ask your Best Buy contact for the available space based on the store format.*
- Freestanding vendor fixtures should be designed to a standard height of 60”. Any fixture exceeding 60” requires case-by-case review and approval. Approved fixtures may be up to 84” in height.
- Fixture placement will be evaluated based on Vendor Home location to maintain sightlines.
- Fixtures or components over 69”H must undergo seismic testing.
- Design taller fixtures with negative space and open headers/canopies to preserve sightlines and meet fire/sprinkler standards.
- Position freestanding fixtures to maximize visibility without blocking sightlines to other areas of the store.
- Incorporate, if desired, temporary compliant flooring to enhance your display.
- Maintain ADA-compliant layouts with clear customer pathways.
  - GCA & IBC Code require aisles serving elements (“architectural components”) to be at least 48”W.

Best Practices

- Consider incorporating a durable toe kick, if applicable.
- Design your Vendor Home to allow for flexible placement of fixtures in multiple orientations.



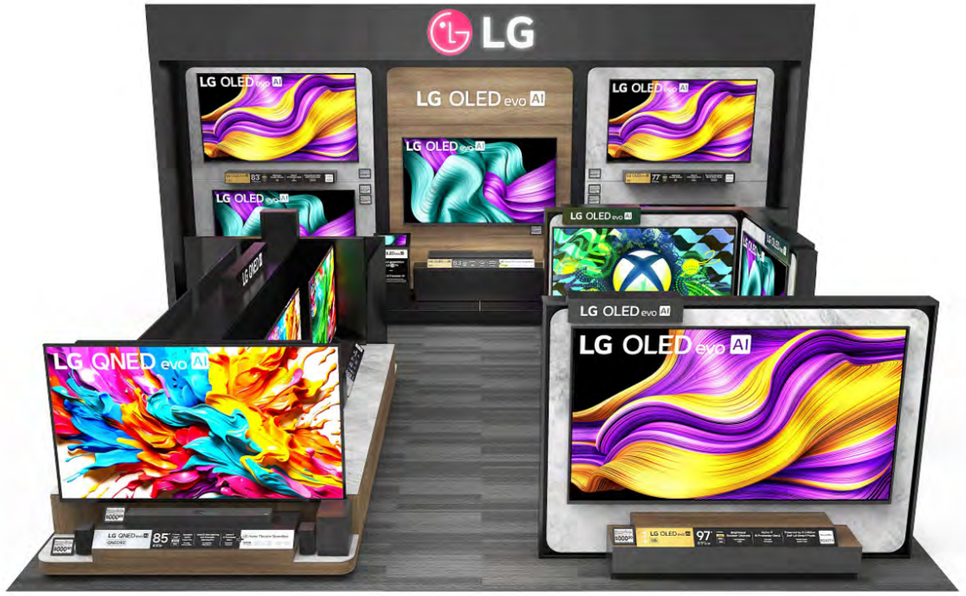

Examples of Vendor Homes on vendor-provided freestanding fixture (above) and vendor-provided perimeter wall fixture (right).

Last Updated August 12, 2026 8:20 AM | Best Buy partner and internal use only. Do not copy, publish, or distribute. The material in this document is confidential to Best Buy.

Vendor-Provided Fixtures:
Graphics

Vendor Expectations

- Provide all graphics, complying with the Copy & Claims Guidelines on Partner Portal.
- Include clear, branded signage that communicates important information but limits excessive text to maintain visual appeal across the Vendor Home.
- Ensure graphics don't distract from or diminish the visual impact of the product. Any backer panels used in your display must leverage neutral colors and textures.
- Include, if desired, one QR code per four linear feet of vendor display. Ensure your code links to BestBuy.com or a closed microsite created only for Best Buy.
- Ensure digital content complies with Best Buy's Technology Design Standards on Partner Portal.
- Include your logo in the uppermost part of your display, adhering to the allotted header space for your fixture type (see page 7).
    - — Logo headers on the **perimeter wall** must follow the specifications shown on page 7.
    - — Logo headers on **all other fixtures** must be displayed within their allotted header space, but are otherwise flexible in color, size, etc.
        - ***Note:*** *Preferred style is a white illuminated logo centered on a black horizontal header.*

Best Practices

- Aside from the logo header, use your logo sparingly.



Find more details and dimensions in these guides on Partner Portal:

Copy & Claims Guidelines

Technology Design Standards

Last Updated August 12, 2026 8:20 AM | Best Buy partner and internal use only. Do not copy, publish, or distribute. The material in this document is confidential to Best Buy.

Vendor Permanent Signage

The purpose of these vendor guidelines is to create a seamless in-store journey for Best Buy customers no matter where they are in the purchase decision process. We want their experience to feel curated and thoughtful. Vendor materials should help pique their interest, make them curious and encourage exploration. It should not bombard them with too much information.

Last Updated August 12, 2026 8:20 AM | Best Buy partner and internal use only. Do not copy, publish, or distribute. The material in this document is confidential to Best Buy.



Best Buy Lifestyle Photography Guidelines

Lifestyle photos should be simple and elegant. Never use photography that appears to be highly stylized or posed. We encourage you to explore natural lighting and airy feels. Try to limit intense coloration and the number of people in each shot.

Last Updated August 12, 2026 8:20 AM | Best Buy partner and internal use only. Do not copy, publish, or distribute. The material in this document is confidential to Best Buy.









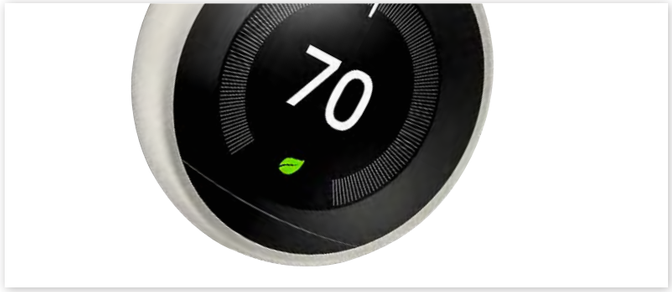



Best Buy Product Photography Guidelines

Shots should include cropped macro imagery of tech and products. We want dramatic composition with strong angles and contours. Feature products on clean white backgrounds and allow room for negative space. Try to focus on interesting textures and product details, and limit color to be an accent.

Last Updated August 12, 2026 8:20 AM | Best Buy partner and internal use only. Do not copy, publish, or distribute. The material in this document is confidential to Best Buy.

Don't use cliched, overused situations.



Don't use contrived, overly staged images.



Don't use images with overly theatrical or dramatic expressions.



Don't use color-filtered images.



Don't use images that are overly smiley or unnaturally perfect situations.

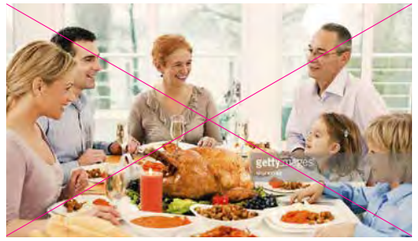

Don't use overly conceptual images.



Don't blur or exaggerate areas of the image.

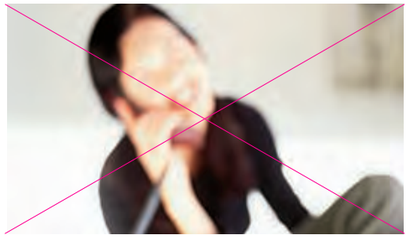

Don't modify lighting or add filters and effects.



Don't pose or stage unnatural environments.



Don't include images that are excessively dark or excessively bright.



Don't include images with brightly colored backgrounds and/or props.



Don't include overly posed or busy environments.



Photography Dont's

Images shown on this page show what NOT to do with lifestyle or product photography.

Last Updated August 12, 2026 8:20 AM | Best Buy partner and internal use only. Do not copy, publish, or distribute. The material in this document is confidential to Best Buy.

Product Card Creation

To ensure consistent print and brand quality, please follow these steps when creating product cards.

1) Choose one of the following approved print vendors.

— Imagine
Mike Fink (mfink@theimaginegroup.com)
— Vomela
Steve Erickson (steve.erickson@vomela.com)
— The Bernard Group
Pete Ludwig (pete.ludwig@thebernardgroup.com)
Jeff Kuzmanich (jeff.kuzmanich@thebernardgroup.com)

2) Ask your Best Buy contact for the correct template for your area.



Template_FloorCare_Product_Card_7x4.indt



FY25_DI_Product_Cards_Template_4x6.indt

Last Updated August 12, 2026 8:20 AM | Best Buy partner and internal use only. Do not copy, publish, or distribute. The material in this document is confidential to Best Buy.

Product Card Creation

3) Import the .ASE file in any Adobe Creative Suite program.
This ensures consistent brand color reproduction both on screen and at the print vendor level.

4) Export Best Buy fonts (shown at right).

5) Populate your graphic with desired information.

6) Ask your Best Buy contact about the approval process.

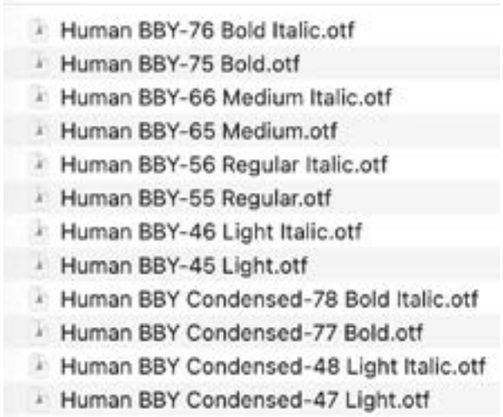

Best Buy fonts

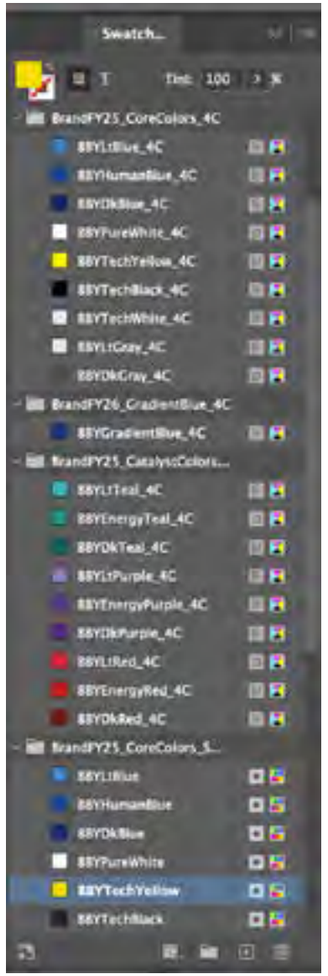

BrandFY26_CoreAndCatalystColors_PrintProduction.ase

Last Updated August 12, 2026 8:20 AM | Best Buy partner and internal use only. Do not copy, publish, or distribute. The material in this document is confidential to Best Buy.

Vendor asset requirements

Vendor-supplied files:

- InDesign CC 2020 [Do not send final files built as a PDF, Illustrator (.AI or EPS) or Photoshop (.PSD, .EPS, or .TIF)]. Photoshop and Illustrator formats are accepted for Links only. **Zip files not uploaded as properly packaged InDesign Files (example A) will automatically be rejected.**
- A separate file should be built for each sign with the trim size indicated with a minimum **1/4-inch .25")** bleed required beyond the trim (example B).
- All files should be built using the most current Best Buy Brand templates.**Templates must be requested on an on-going basis to ensure the most up-to-date template is being utilized.**
- Build the file in Process colors unless PMS colors are used.
- Identify any PMS, special mix or spot colors. Keep your color names consistent throughout the project.
- Delete all unused colors.
- Label white ink with a SPOT 100% cyan color.
- Part Number and Disclaimer Format (Human BBY Condensed font):
  - -Small Formats (below 12" x 12"): 8 pt Condensed type, Tracking value 50, Leading 100% (8 pt); optical kerning.
  - -Medium Formats (above 12" x 12"): 12 pt Condensed type, Tracking value 50, Leading 100% (12 pt); optical kerning.
  - -Special Formats (Sidewalk, above 48" x 48"): 18 pt Condensed type, Tracking value 50, Leading 100% (18 pt); optical kerning.
- Slug Format:
  - 10 pt Condensed type (except for Bold Category titles i.e., Size, Stock, Colors, etc.), Tracking value 50.
- Part Number and Valid Dates location: 0.25" from right and bottom edges.
- Copyright location: 0.25" from left and bottom edges. (Can be stacked with part number and valid dates if needed.)
- Use second page of InDesign file to show back side mounting (magnets, REMO tape, etc.) locations.
- Package Zip File includes: InDesign file, .IDML file, PDF and respective folders containing all Links and Fonts (example A).

A

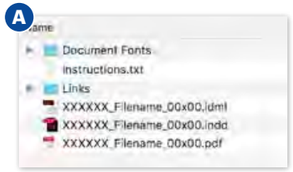

B

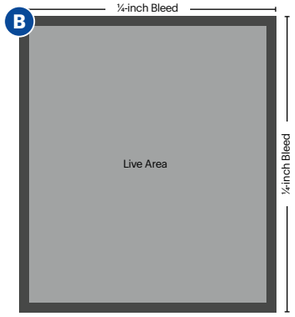

In-store signage vendor-supplied images:

- Acceptable Formats: .PSD, .EPS, .TIF.
- Color Space: CMYK or RGB color.
- Minimum: all hi-res images 7200 pixels on the longest side. Ideal: 9000 pixels on the longest side (Future Store).
- Include all hi-res images 300dpi or higher.
- Include clipping path around product.

Logo requirements:

- Adobe Illustrator vector files (.ai or .eps)
- Fonts need to be outlined and/or packaged before sending files
- Include all versions of the logo:
  - 4-Color (CMYK) or RGB
  - Reversed out (all white)
  - Black (K)
  - Horizontal and vertical

File extensions & Terminology:

.PSD – Photoshop File
.AI – Illustrator File
.INDD – InDesign File
.INDT – InDesign Template File
.IDML –InDesign File that allows users of different versions of InDesign to open up the file
.PDF – A file format that provides an electronic image of text or text and graphics that look like a printed document and can be viewed, printed and electronically transmitted.
.JPEG – JPEGs might be the most common file type you run across on the web or for projects that require printing at a high resolution.
.TIFF – A TIFF is a large raster file that doesn't lose quality. TIFF files are also commonly used when saving photographs for print. Not recommended for Web.
.PNG – PNGs are amazing for interactive documents such as web pages, but are not suitable for print.
.EPS –EPS is a file in vector format that has been designed to produce high-resolution graphics for print.

.PSD – PSDs are files that are created and saved in Adobe Photoshop. This type of file contains "layers" that make modifying the image much easier to handle.
Packaged File – A packaged file ensures that all fonts and linked graphics are included with the InDesign file.
Link – A file that is linked to, but not embedded, resulting in a smaller document. If a link is modified, it will automaticlly update in the working file.
Slug – Information outside of the printing and bleed area that contains all necessary information for the printer/producer like size, colors, stock, finishing instructions, etc.
Lorem Ipsum – Also known as 'dummy copy' or 'filler copy,' lorem ipsum is a generic filler text used when the real text is not available.
Rastor Image – Raster images are constructed by a series of pixels, or individual blocks, to form an image.
File Types: JPEG, GIF and PNG.
Vector Image – Vector images are far more flexible and perfect for creating graphics that require frequent resizing.
File Types: EPS, AI and PDF.

Resolution – The amount of detail an image has. The higher your resolution, the better your images appear, and the more detail is rendered. Lower resolution images or graphics tend to appear blurry, pixelated or muddy. Ideal print resolution is 250–300dpi.
Bleed – Printing that goes beyond the edge of where the sheet will be trimmed. The bleed gives the printer a small amount of space to account for movement of the paper. Its sole purpose is to make sure the design or image reaches the very edge without leaving any unsightly white edges.
Live Area/Safety Area – The live area is the area in which your printer deems a safe zone for important text or images. This is an area of your printed piece that they can deem safe from cropping.
Page Size/Trim Size – The final size of a printed page after excess edges have been cut off s the trim size.
Flat Size: The dimensions of a document after it has been printed and received any necessary trimming, but before any additional finishing, such as folding.

Last Updated August 12, 2026 8:20 AM | Best Buy partner and internal use only. Do not copy, publish, or distribute. The material in this document is confidential to Best Buy.

Packaging an InDesign file

How to package an InDesign file:

1. Open your INDD file in InDesign.
2. Resolve any errors concerning missing links or fonts.
3. Go to File > Package.
4. Click the Package button at the bottom of the Summary window. Verify there are no missing links or fonts.
5. Click Continue on the “Printing Instructions” window.
6. Browse to where you’d like to create the package folder and enter the name of the folder.
7. Make sure the “Copy Fonts,” “Copy Linked Graphics,” “Update Graphic Links in Package,” “Include IDML” and “Include PDF (Print)” are all checked. Other boxes should be unchecked.
8. Click the Package button.
9. Find the new folder InDesign created and verify that it contains copies of all required files.
10. Right-click the folder and choose “Compress” (Mac) or “Send to ZIP” (Windows: might be something different but similar depending on what software you have installed). This will zip it up.
11. **Box uploads:** Upload uncompressed folders to https://bestbuy.ent.box.com. If you do not have access to Box, work with your Internal Best Buy contact to access your BoxBBYTransfer vendor folder. Once uploaded to your vendor folder, send via email your business partner a screenshot of the Box path and the file name.

Zip files not uploaded as properly packaged InDesign Files (see #9) will automatically be rejected.

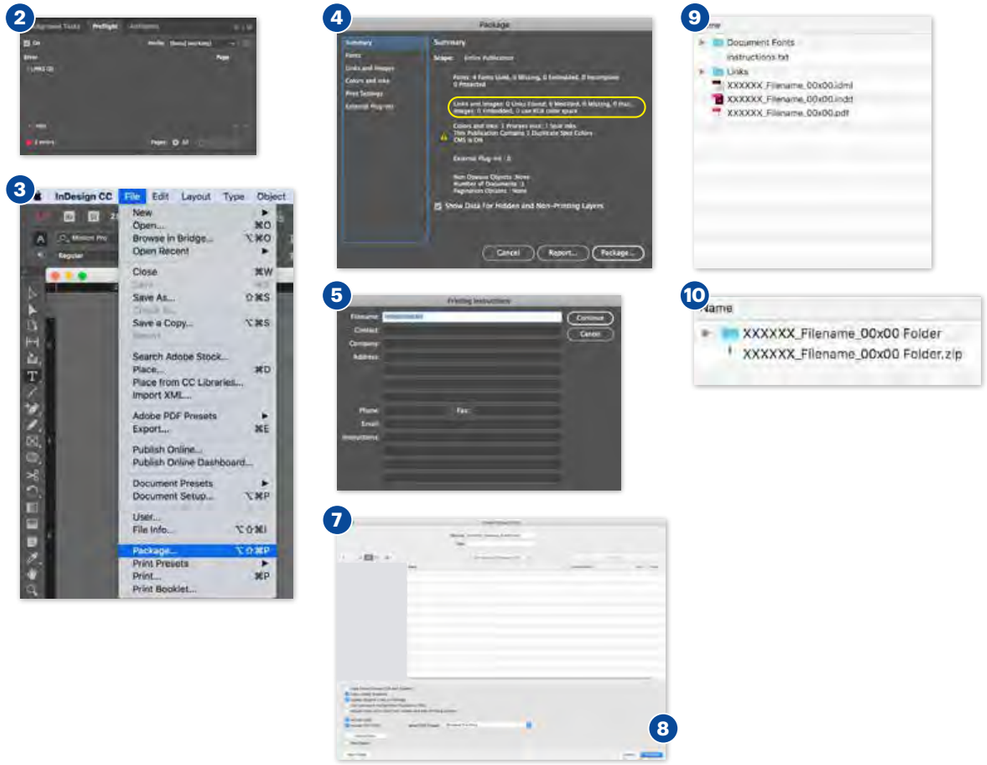

Last Updated August 12, 2026 8:20 AM | Best Buy partner and internal use only. Do not copy, publish, or distribute. The material in this document is confidential to Best Buy.

Vendor Temporary Signage

Overview

Temporary signage may be created by vendors when Best Buy signage options have been exhaused.

Temporary signage is used to highlight a single message that helps customers easily understand and gain confidence in your offers. It lives in stores for 90 days or fewer and falls within one of three categories:

1. Temporary promotions
2. Product launches
3. General marketing



Last Updated August 12, 2026 8:20 AM | Best Buy partner and internal use only. Do not copy, publish, or distribute. The material in this document is confidential to Best Buy.

Requirements and Best Practices

Temporary signage may live in stores for up to 90 days. Signage may be renewed once within that time period if a new sign is desired. Consider the below requirements and best practices when creating your signage.

Vendor Requirements

- Dedicate placement on your display to all 5x7 and 8.5x11 signage elements.
- Use cling, magnetic or ridged paper forms to minimize distraction from the main display product and message. Materials must not leave residue or cause damage to the display (e.g. foam tape or stickers).
- Provide all signage holders and attachments.
- Include logo — center or left-justified — in the upper quarter of the sign, and valid dates and VPP part number in the lower right corner.
- Include, if desired, award logos and “new” callouts on temporary signage, permitted the callouts are removed if/when the sign is renewed.
  Note: *Awards and related copy and claims must not be 3+ years old.*
- Use approved “Only at Best Buy” lockup for relevant product.
- Consult your Best Buy contact before including any QR codes on your signage, as they are only permitted in rare circumstances.

Reccomendations

- Focus signs on a single message/offer for the best customer engagement.
- Utilize the size effectively and fully without creating visual clutter.
- Limit the use of website links as these are not always accessible to the customer. Website links should not be the primary message.

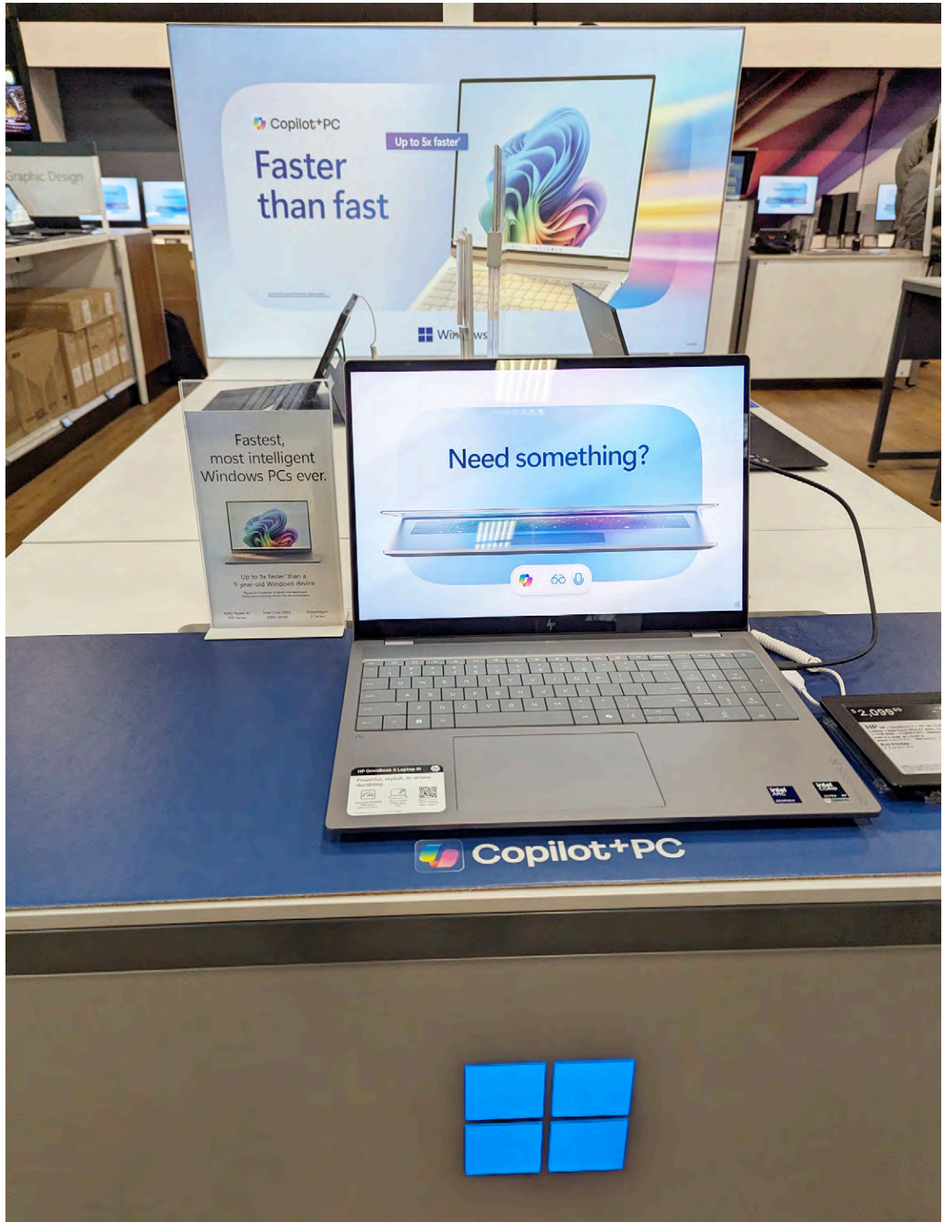

Last Updated August 12, 2026 8:20 AM | Best Buy partner and internal use only. Do not copy, publish, or distribute. The material in this document is confidential to Best Buy.

Requirements for Promotional Signage

Vendor promotional signage must follow temporary signage guidelines in addition to the guidelines below.

> ***Note:*** *Promotions valid 180+ days are considered evergreen offers and must follow a separate set of standards. Ask your Best Buy contact for details.*

Vendor Requirements

- Reserve promotional signage for complex offers such as BOGO, bundle or “Buy More” offers. Simple offers such as sales, percent off or savings messages are not permitted.
- Ensure messaging follows our Copy & Claims Vendor Guidelines.
- Include product images and applicable SKUs.
- If using a Best Buy template (e.g. Prepaid Mobile), do not modify the template.



Last Updated August 12, 2026 8:20 AM | Best Buy partner and internal use only. Do not copy, publish, or distribute. The material in this document is confidential to Best Buy.

Signage Types

Vendor-provided temporary signage should add to — not diminish — the customer experience. No matter the signage type deployed, it must not cover or block product, demo or display messaging. Messaging may be moved or reorganized to accommodate temporary signage.

See below to discover the signage options available for your presentation method.

	Baseline	Vendor Takeover (Inline)	Vendor Takeover (Endcap)	Discovery Spotlight	Vendor Home
Small (up to 5x7) — 2’ display minimum	Best Buy-owned templates only	✓	✓	✓	✓
Medium (up to 8.5x11) — 4’ display minimum	Best Buy-owned templates only	Best Buy-owned templates only	✓	✓	✓
Temp Easel (24”W x 36”H)					✓
Temp Standee (24”W x 60”H) — Non-Promo					✓
Dimensional Form — Non-Promo					✓
Additional Paid Placements and Launch	See Best Buy In-Store Takeover documentation for requirements.				

Last Updated August 12, 2026 8:20 AM | Best Buy partner and internal use only. Do not copy, publish, or distribute. The material in this document is confidential to Best Buy.

Signage Types: Small (up to 5x7)

Qualifying Display Methods

- Vendor Takeover — Inline and Endcap
- Discovery Spotlight
- Vendor Home

Vendor Requirements

- Display is at least 2’W.
- Use only one temp sign — promotional or advertorial — per display.
- Keep sign within 5x7” parameters.
- Dedicate specific space on your display for signage.
- See Signage Requirements above for signage specific reqiurements.

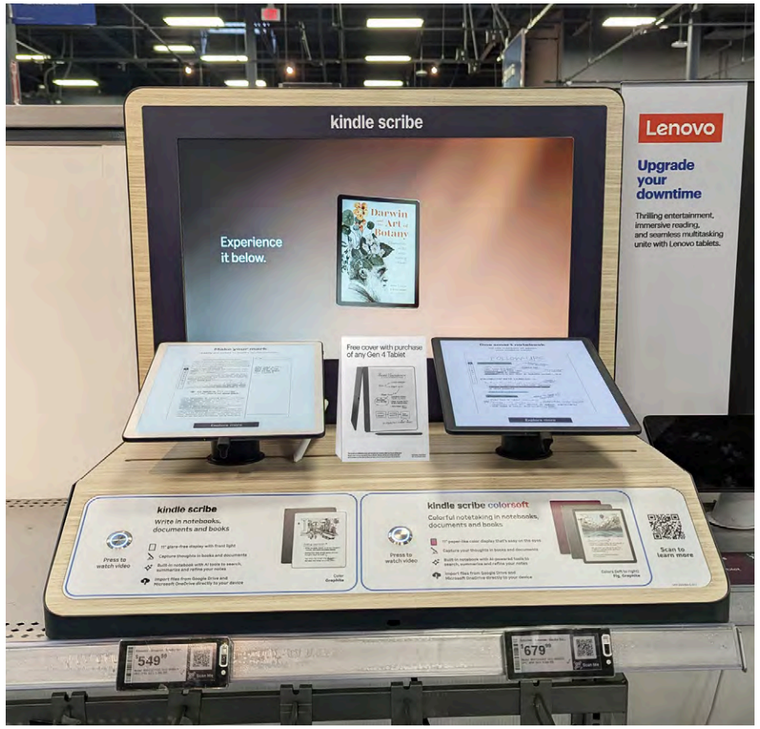

5x7 Example on 2’ Display



5x7 Example on 4’ Display

Last Updated August 12, 2026 8:20 AM | Best Buy partner and internal use only. Do not copy, publish, or distribute. The material in this document is confidential to Best Buy.

Signage Types: Medium (up to 8.5x11)

Qualifying Display Methods

- Vendor Takeover — Endcap
- Discovery Spotlight
- Vendor Home

Vendor Requirements

- Display is at least 4’W.
- Use only one temp sign — promotional or advertorial — per display.
- Keep sign within 8.5x11” parameters.
- Dedicate specific space on your display for signage.
- See Signage Requirements above for signage specific reqiurements.

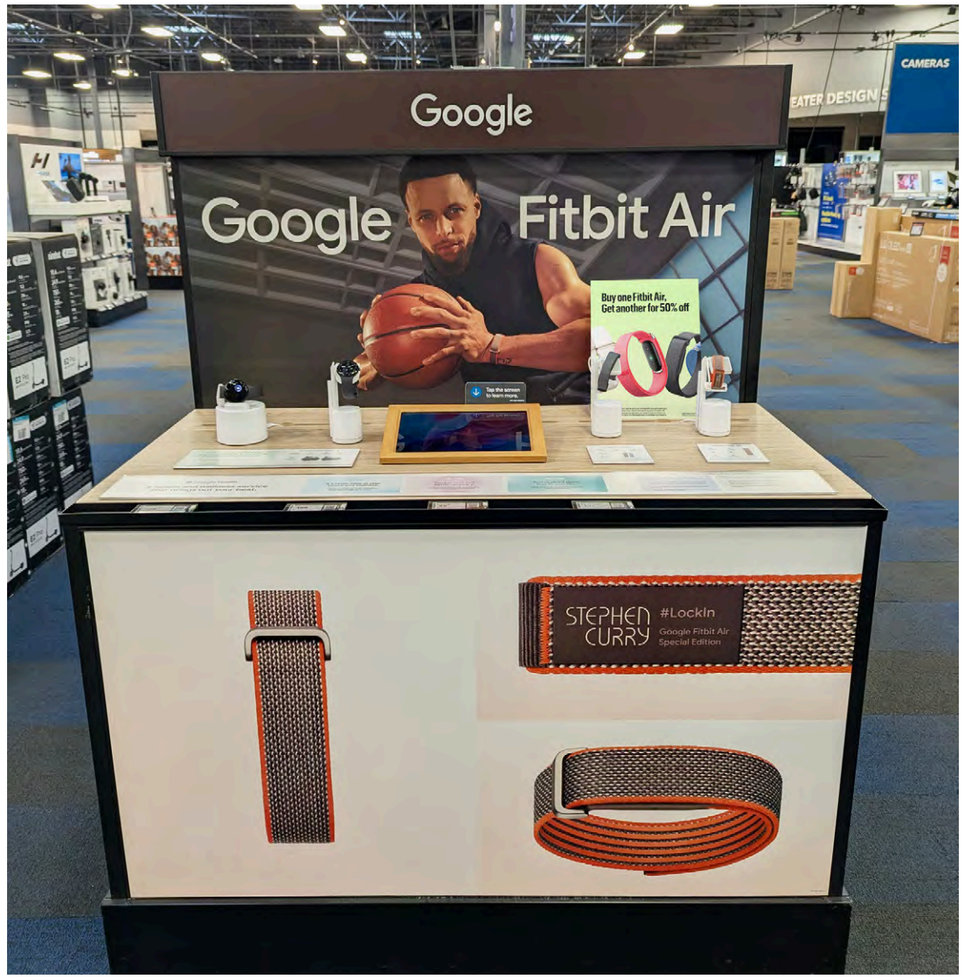

Last Updated August 12, 2026 8:20 AM | Best Buy partner and internal use only. Do not copy, publish, or distribute. The material in this document is confidential to Best Buy.

Signage Types: Easel

Qualifying Display Methods
- Vendor Home

Vendor Requirements
- Use only one easel — promotional or advertorial — per Vendor Home.
- Keep sign within 24”W x 36”H size.
- Dedicate specific space for easel, ensuring placement does not impeed ADA standards.
- See Signage Reqiurements above for signage specific requirements.



Last Updated August 12, 2026 8:20 AM | Best Buy partner and internal use only. Do not copy, publish, or distribute. The material in this document is confidential to Best Buy.

Signage Types: Standee

Qualifying Display Methods
- Vendor Home

Vendor Requirements
- Use only one standee per Vendor Home, ensuring it is advertorial only.
- Keep sign within 24”W x 60”H size.
- Dedicate specific space for standee, ensuring placement does not impeed ADA standards.
- See Signage Reqiurements above for signage specific requirements.

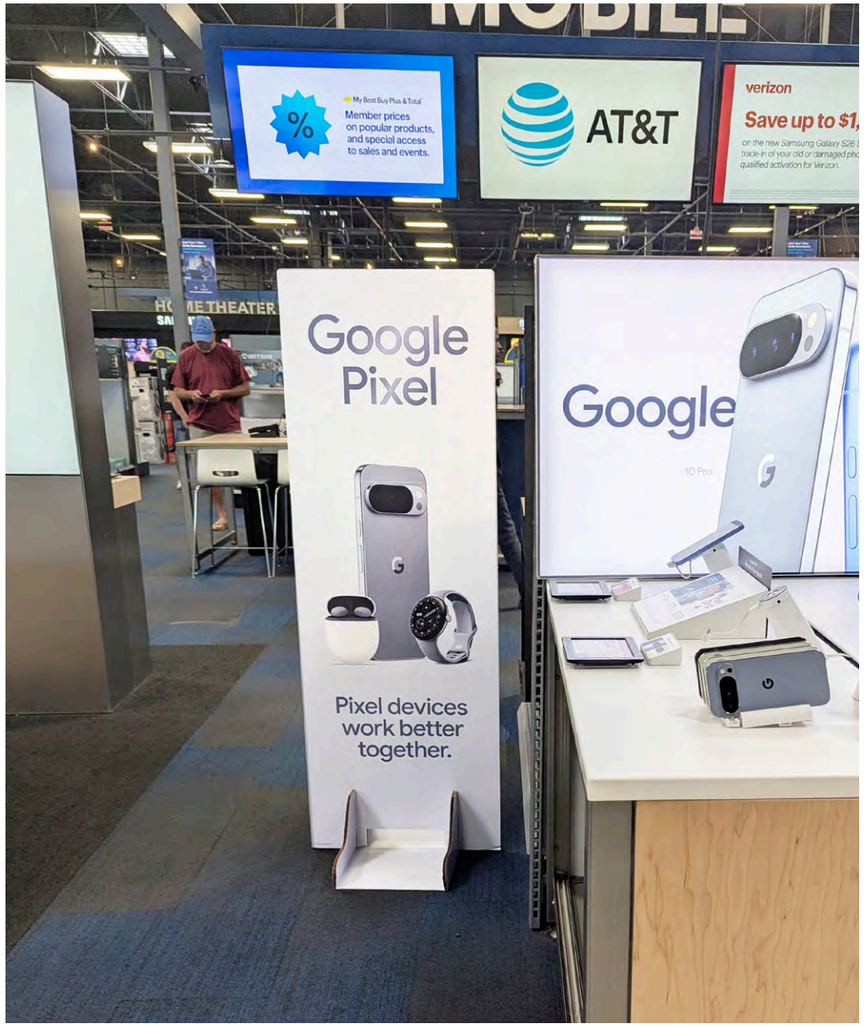

Last Updated August 12, 2026 8:20 AM | Best Buy partner and internal use only. Do not copy, publish, or distribute. The material in this document is confidential to Best Buy.

Signage Types: Dimensional Form

Qualifying Display Methods
- Vendor Home

Vendor Requirements
- Use only one dimensional form per Vendor Home, ensuring it is advertorial only.
- Keep sign within 69”H parameter.
- Dedicate specific space for dimensional form, ensuring placement does not impeed ADA standards.
- Work with your Best Buy contact if your dimensional form is complex and heavy, requiring installation and removal by third-party labor.
- See Signage Reqiurements above for signage specific requirements.



Last Updated August 12, 2026 8:20 AM | Best Buy partner and internal use only. Do not copy, publish, or distribute. The material in this document is confidential to Best Buy.

Submissions

Temporary signage submissions are reviewed by Best Buy to ensure compliance with the below requirements.

Signs need to be reviewed at least 5 weeks prior to the merch kit date. **Submit your signs earlier to allow for feedback and resubmissions as needed.**

Vendor Requirements

- Include a render in context with your art files.
- Include valid dates and a VPP part number (or placeholder) in the lower right corner even if they are included in the sign messaging. This helps Blue Shirts quickly identify valid signs.
- Include details on how the sign will attach to or sit on the display.

Best Practices

- Provide high-resolution PDF or JPEG files to ensure copy and legal footers are clearly legible. Resubmission is required if copy is illegible.

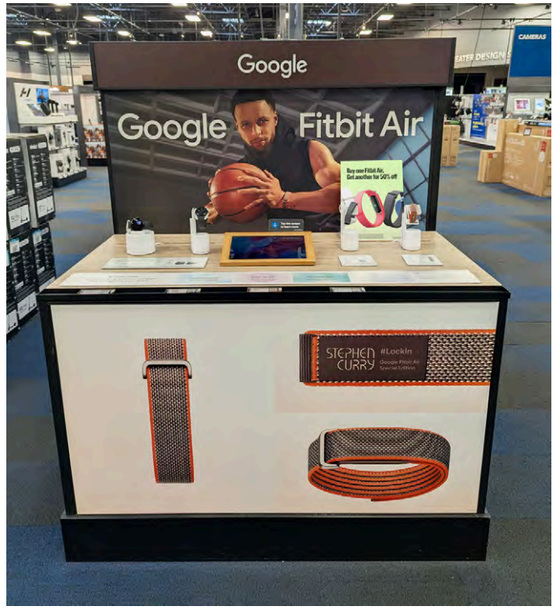

Render in Context



Attachment



1

Offer Details: Valid through September 30, 2026 or while supplies last.

Excludes prior purchases. May not be valid in combination with other offers. Limit 1 product discount per transaction. Markdowns taken from Comparable Value. Excludes special order, clearance, open-box, refurbished,pre-owned items and select Marketplace Products. Discount taken at register. Price shown excludes shipping and any applicable tax. Offer valid on Google Nest Cam Indoor (wired, 3rd gen), Google Nest Cam Outdoor (wired, 2nd gen), Google Nest Cam (outdoor or indoor, battery), Google Nest Cam with floodlight, Google Nest Doorbell (battery), Google Nest Doorbell (wired, 3rd gen) and Google Nest Learning Thermostat (4th gen). Products must be purchased on the same receipt to receive bundle savings. See a Blue Shirt for details.

2

VPP-XXXXXXXX Valid from 4/1/26 -7/1/26

Last Updated August 12, 2026 8:20 AM | Best Buy partner and internal use only. Do not copy, publish, or distribute. The material in this document is confidential to Best Buy.

Renewal Submissions

Temporary signs may be renewed, permitted they meet the following qualifications.

Renewal Qualifications

- Launch or release date has shifted beyond the original published signage dates.
- Offer is extended beyond the original valid dates.
- Temporary sign has not been previously renewed (only **one** renewal is permitted).
- Original sign is active in stores. Signs that have passed their original valid dates and have been removed are no longer eligible for renewal and must be submitted as a new sign.

Renewal Requirements

- Follow the same reqiurements and best practices as all vendor-provided temporary signage as well as these additional requirements.
- Keep main message unchanged and limit changes to minor details (e.g. dates, wording clarity, typos, single product image, etc.).
  Note: *Signs requiring significant changes or showing invalid offers must be submitted as new.*
- Remove new callouts and award badges from renewed signage.
- Assign a new part number to the renewed sign.





VPP-XXXXXXXX Valid from 4/1/26 - 7/1/26 → VPP-XXXXXXXX Valid from 4/1/26 - 9/30/26

Last Updated August 12, 2026 8:20 AM | Best Buy partner and internal use only. Do not copy, publish, or distribute. The material in this document is confidential to Best Buy.

Common Support Forms

These structures are highly reccomended to support your temporary signage based on their demonstrated ability to withstand the store environment.

If you choose to use other forms, we may request samples or prototypes for unique proposals.













Last Updated August 12, 2026 8:20 AM | Best Buy partner and internal use only. Do not copy, publish, or distribute. The material in this document is confidential to Best Buy.

Additional Paid Placements

Additional paid placement opportunities can be requested through Best Buy Ads. Please see ***In-Store Takeover*** documentation for details.

Signage Types
- Aerial
- Racetrack Standee
- Bollard Cover
- Digital Screen
- Door/Window Cling
- Transom Window Cling
- Front-of-Store Insert Sign
- Focal

Benefits
- Placement outside of vendor display areas
- High customer visbility
- Wider creative guardrails to allow unique art



Window Cling



Aerial



Standee



Bollard Cover



Focal

Last Updated August 12, 2026 8:20 AM | Best Buy partner and internal use only. Do not copy, publish, or distribute. The material in this document is confidential to Best Buy.

Video Content

Standards

Vendor Expectations

- Meet all standards for content on Best Buy's in-store video channels: HEET wall, PC monitor wall and C7 Lab screens.
- Ensure your content fits these ratings: film (G, PG); television (TVY, TV7, TVG, TVPG); video games/software (eC, E, T). Content that exceeds these ratings (i.e. R-rated films and M-rated games/software) will be subject to review and editing.
- Secure all rights for talent, music and footage contained in your content.

Themes of Concern

Content displaying these themes may be rejected:

- Advertising directed at children
- Antisocial, disparaging or demeaning behavior
- Competitor claims
- Display of personal data
- Drinking alcohol to excess
- Drugs/drug use
- Illegal activities
- Nudity/sexual activity
- Offensive language
- Phone numbers
- Pricing offers
- Product placement/competitor signage
- Religion/occult
- Smoking
- Tasteless or violent acts
- URL addresses

Superlative Claims

Content plays on a closed-circuit environment across devices of varying brands, and superlative claims by a provider may put Best Buy at risk.

- Subjective claims are superlative expressions of opinion. They are not permitted.
  - — ***Example:*** *"XYZ Company is your best choice when looking for a new HDTV."*
- Objective claims are superlative expressions that can be measured or proven. They are only permitted if legal documentation is given to Best Buy before the claim airs.
  - — ***Example:*** *"XYZ Company is the world's best-selling brand of television."*
- Objective claims that can't be measured are not permitted.
  - — ***Example:*** *"XYZ Brand has the lowest prices of televisions in the world."*

Best Practices

Consider the following when producing your content. Any content deemed ineffective, of subpar quality or potentially negative to Best Buy may be rejected.

- Lead with clear, impressive and professionally shot footage. Our dynamic images are important. Low quality content will stand out and may portray Best Buy and your brand in a negative light.
- Keep content brief (30 secs. for HD/4K Ultra).
- Capture busy customers' attention with engaging content that gets right to the point.
- Include audio, but don't rely on it. Do not limit yourself to an on-camera spokesperson, voiceover or "audio-dependent" technique. If including voiceover, also convey your messages visually.
- Include engaging music and sound design that is mixed to standard broadcast levels.
- Use short phrases as on-screen text to promote key messages and make your content memorable.

Content Approval

Submit an electronic file of your content to Digital Content Approval Store Experience for approval **at least three weeks before final delivery**.
After approval, submit content to the C7 Lab or Aldis at least two weeks before in-store deployment. If content does not meet required specs (pg. 3), deployment may be delayed.

Last Updated August 12, 2026 8:20 AM | Best Buy partner and internal use only. Do not copy, publish, or distribute. The material in this document is confidential to Best Buy.

Specifications

UHD Video (Aldis)

No formats below UHD will be accepted.

Source Video
- 2160p 59.94 fps preferred
- 2160p 29.97 fps or 2160p 23.98 fps accepted

Source Audio
- Two channels of audio, stereo preferred (2.0 LT/RT)
- Multi-track surround sound is not supported
- HEET wall requires audio; PC monitor wall does not support audio

Accepted Data File Formats
- Quicktime .mov (ProRes HQ, ProRes 4:2:2) preferred
- MPEG-4 .mp4 (H265 @ 25Mbps, H264 @ 25Mbps)
- Material Exchange Format .mxf (ProRes Hq, ProRes 422, Avid DNxHD)

HD Video (C7 Lab)

Video Codec
- H.264

Resolution
- 1920x1080

Container Format
- mp4

H.264 Extensions/Containers
(Support for Main and High profiles up to level 4.2)
- Max. video bit rate: 25Mbps
- Max. video reference frames: 4
- Audio support: AAC audio (CBR/VBR) up to 288Kbps

UHD Video (C7 Lab)

Video Codec
- H.265

Resolution
- 3840x2160

Video Bit Rate
- CBR (constant bit rate) between 30 and 40Mbps

Color Depth
- 4K video can be encoded at 4:2:0 subsampling with 8 bits (Main Profile) or 10 bits (Main 10 Profile) of depth

HDR and Dolby Vision*
- XTx44 players support both HDR10 and Dolby Vision.
- XTx43 players support HDR10.

*Ask your media contact which player is being used.

BrightSign
- Players support both H.265 version 1 profiles, Main and Main 10. (We don't support version 2 profiles.)
- Container format: .mp4
- Max. video bit rate: CBR between 30 and 40 Mbps
- Max. video reference frames: 4
- Merge mode: if you use B-frames as references in H.265 "merge mode," the size of the references list should be limited to two or fewer.
- Audio support: AAC audio (CBR/VBR) up to 288Kbps

Last Updated August 12, 2026 8:20 AM | Best Buy partner and internal use only. Do not copy, publish, or distribute. The material in this document is confidential to Best Buy.

Thank you.